DIST.	COUNTY	ROUTE	KILOMETER POST TOTAL PROJECT	SHEET NO.	TOTAL SHEETS
04	SF	80	13.2/13.9	837S2	1204

REGISTERED ENGINEER - CIVIL

01-20-12

PLANS APPROVAL DATE

The State of California or its officers or agents shall not be responsible for the accuracy or completeness of electronic copies of this plan sheet.

REGISTERED PROFESSIONAL ENGINEER Marwan N. Nader No. C 054426 Exp. 12/31/13 CIVIL STATE OF CALIFORNIA

T.Y. LIN / MOFFATT & NICHOL
825 BATTERY STREET
SAN FRANCISCO, CA 94111

Caltrans now has a web site! To get to the web site, go to: http://www.dot.ca.gov

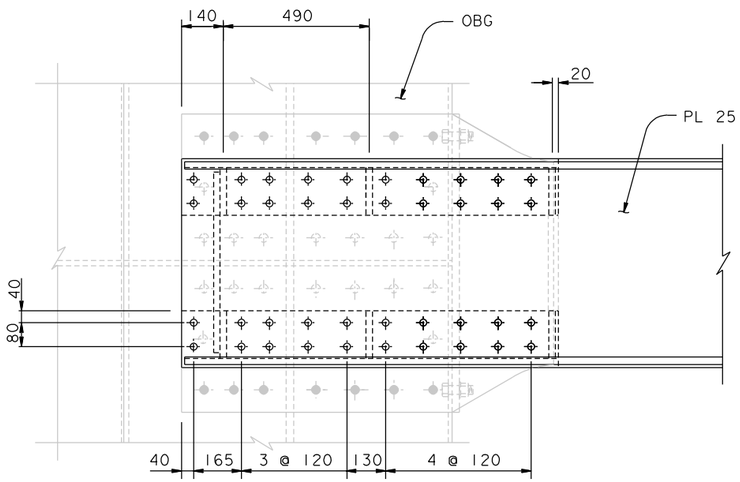

SECTION C-C
1:10

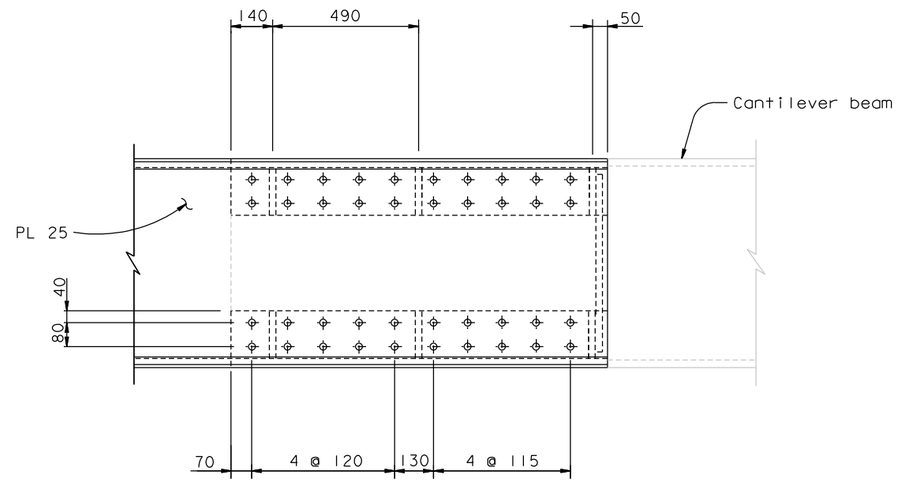

SECTION D-D
1:10

CONTRACT CHANGE ORDER NO.
SHEET ____ OF ____

REQUESTS FOR INFORMATION NOT ADDRESSED IN THIS CCO REMAIN IN FORCE

ALL DIMENSIONS ARE IN MILLIMETERS UNLESS OTHERWISE SHOWN

R. Vallizadeh/V. Toan/Y.L./W.L./F.C.
DESIGN OVERSIGHT
SIGN OFF DATE 01/20/12

MARK	DATE	DESCRIPTIONS	BY	CH'D	CCO#
0	01/20/12	BIKEPATH CANTILEVER BEAM MODIFICATIONS	DT	MN	233

REVISIONS

	BY	CHECKED
DESIGN	D. Turner	M. Nader
DETAILS	D. Turner	H. Tazir
QUANTITIES	D. Turner	H. Tazir

PREPARED FOR THE STATE OF CALIFORNIA DEPARTMENT OF TRANSPORTATION

R. Manzanarez
PROJECT ENGINEER

BRIDGE NO. 34-0006L/R
KILOMETER POST 13.2/13.9

SAN FRANCISCO OAKLAND BAY BRIDGE
EAST SPAN SEISMIC SAFETY PROJECT
SELF-ANCHORED SUSPENSION BRIDGE
(SUPERSTRUCTURE & TOWER)

BIKEPATH DETAILS NO. 13B

Rev. Date: 5-18-98

ORIGINAL SCALE IN MILLIMETERS FOR REDUCED PLANS 0 10 20 30 40 50 60 70 80 90 100

CU 04
EA 0120F1

DISREGARD PRINTS BEARING EARLIER REVISION DATES → 01/20/12

REVISION DATES (PRELIMINARY STAGE ONLY)

SHEET 420S2 OF

FILE => I:\bb\04-012001\sas\contract plans and cco\cco\cco#233\1-original 01-20-12\dgn\agbwd13b.dgn

100% PS&E

USERNAME => DWinrow DATE PLOTTED => 20 JAN 2012 TIME PLOTTED => 11:47:40