| DIST. | COUNTY | ROUTE | KILOMETER POST TOTAL PROJECT | SHEET NO. | TOTAL SHEETS |
|---|---|---|---|---|---|
| 04 | SF | 80 | 13.2/13.9 | 837S1 | 1204 |

REGISTERED ENGINEER - CIVIL

01-20-12
PLANS APPROVAL DATE

*The State of California or its officers or agents shall not be responsible for the accuracy or completeness of electronic copies of this plan sheet.*

REGISTERED PROFESSIONAL ENGINEER Marwan N. Nader No. C 054426 Exp. 12/31/13 CIVIL STATE OF CALIFORNIA

T.Y. LIN / MOFFATT & NICHOL
825 BATTERY STREET
SAN FRANCISCO, CA 94111

*Caltrans now has a web site! To get to the web site, go to: http://www.dot.ca.gov*

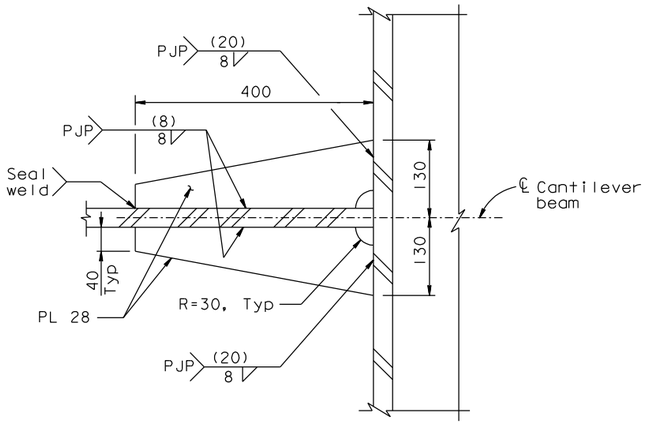


SECTION S-S
1:5

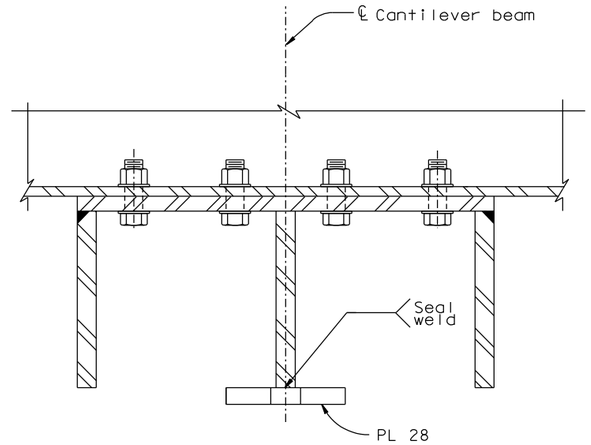


SECTION T-T
1:5

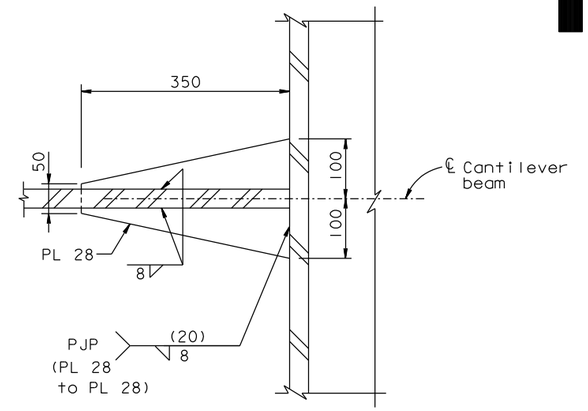


SECTION U-U
1:5

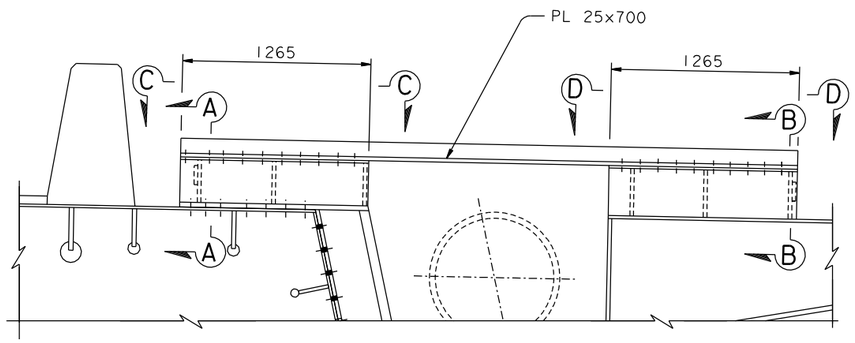


DETAIL M
1:20

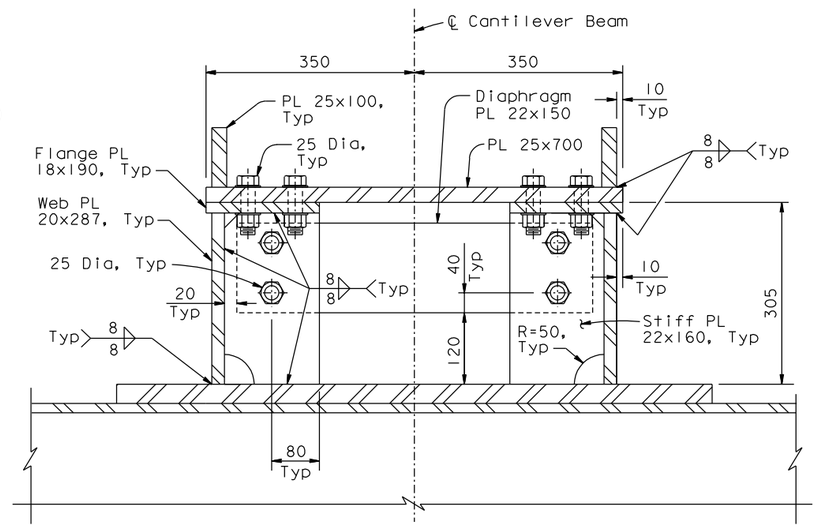


SECTION A-A
1:5

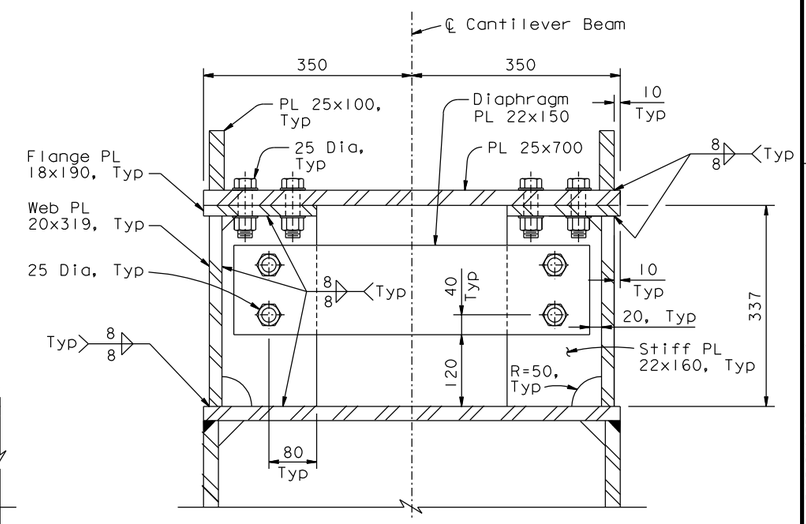


SECTION B-B
1:5

NOTES:

1. At PP117 web, flange and stiffener plates shall be shop-installed on the cantilever beam and top PL 32 on the OBG.
2. PL 25s and diaphragm plates shall be field-bolted to the flange plates after the cantilever beam is bolted to the OBG, and prior to installation of bikepath panels between PP115 and PP121.
3. For Sections C-C and D-D, see "Bikepath Details No. 13B" sheet.

CONTRACT CHANGE ORDER NO. _____
SHEET ____ OF ____

*REQUESTS FOR INFORMATION NOT ADDRESSED IN THIS CCO REMAIN IN FORCE*

ALL DIMENSIONS ARE IN MILLIMETERS UNLESS OTHERWISE SHOWN

R. Valizadeh/V. Toan/Y.L./W.L./F.C.
DESIGN OVERSIGHT
Roya Valizadeh / Vong Toan / Y. Liu
SIGN OFF DATE 01/20/12

| MARK | DATE | DESCRIPTIONS | BY | CH'D | CCO# |
|---|---|---|---|---|---|
| 0 | 01/20/12 | BIKEPATH CANTILEVER BEAM MODIFICATIONS | DT | MN | 233 |

REVISIONS

| | | | |
|---|---|---|---|
| DESIGN | BY D. Turner | CHECKED M. Nader | |
| DETAILS | BY D. Turner | CHECKED H. Tazir | |
| QUANTITIES | BY D. Turner | CHECKED H. Tazir | |

**PREPARED FOR THE STATE OF CALIFORNIA DEPARTMENT OF TRANSPORTATION**

R. Manzanarez
PROJECT ENGINEER

BRIDGE NO. 34-0006L/R
KILOMETER POST 13.2/13.9

SAN FRANCISCO OAKLAND BAY BRIDGE
EAST SPAN SEISMIC SAFETY PROJECT
SELF-ANCHORED SUSPENSION BRIDGE
(SUPERSTRUCTURE & TOWER)

# BIKEPATH DETAILS NO. 13A

Rev. Date: 5-18-98

ORIGINAL SCALE IN MILLIMETERS FOR REDUCED PLANS 0 10 20 30 40 50 60 70 80 90 100

CU 04
EA 0120F1

DISREGARD PRINTS BEARING EARLIER REVISION DATES 01/20/12

REVISION DATES (PRELIMINARY STAGE ONLY)

SHEET 420S1 OF

FILE => I:\bb\04-012001\sas\contract plans and cco\cco\cco#233\1-original 01-20-12\dgn\agbwd13a.dgn

100 % PS&E

USERNAME => DWinrow DATE PLOTTED => 20 JAN 2012 TIME PLOTTED => 11:49:11