DIST.	COUNTY	ROUTE	KILOMETER POST TOTAL PROJECT	SHEET NO.	TOTAL SHEETS
04	SF	80	13.2/13.9	835R5	1204

REGISTERED ENGINEER - CIVIL

12-6-04
PLANS APPROVAL DATE

REGISTERED PROFESSIONAL ENGINEER Tien Hung Ho No. C 43990 Exp. 6/30/13 CIVIL STATE OF CALIFORNIA

The State of California or its officers or agents shall not be responsible for the accuracy or completeness of electronic copies of this plan sheet.

T.Y. LIN / MOFFATT & NICHOL
825 BATTERY STREET
SAN FRANCISCO, CA 94111

Caltrans now has a web site! To get to the web site, go to: http://www.dot.ca.gov

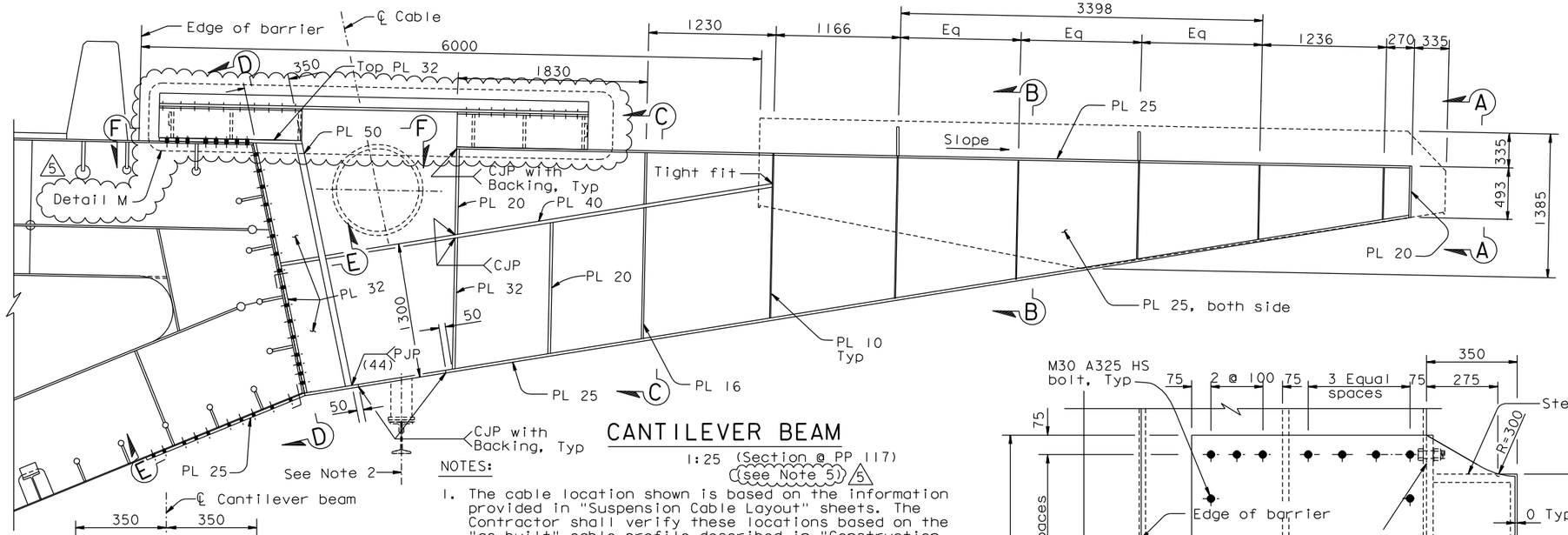

CANTILEVER BEAM

1:25 (Section @ PP 117) (see Note 5) 5

NOTES:

1. The cable location shown is based on the information provided in "Suspension Cable Layout" sheets. The Contractor shall verify these locations based on the "as built" cable profile described in "Construction Sequence" sheets. In the event of a conflict, bikepath bracket details may be revised and submitted to the Engineer for review and approval.
2. For location and details of traveler rail support, see "Traveler Rail Details No.13" sheet.
3. Caulking shall be provided along all edges of bolted connection between bikepath cantilever beam and box girder.
4. For elastomeric sleeve detail, see "Bikepath Details No.4A" sheet.
5. For Detail M, see "Bikepath Details No.13A" sheet. 5

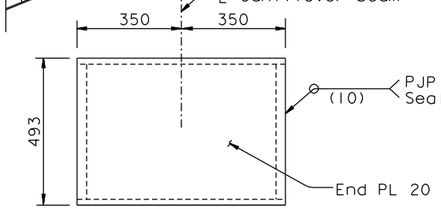

VIEW A-A

1:10

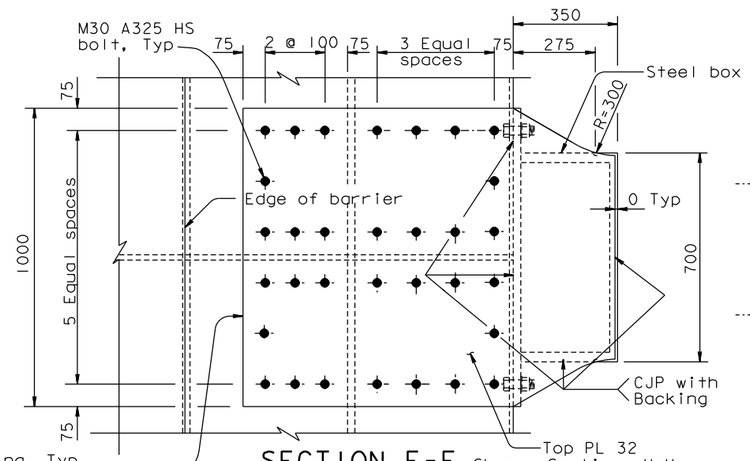

SECTION F-F

1:10

Shown, Sections H-H, Q-Q similar

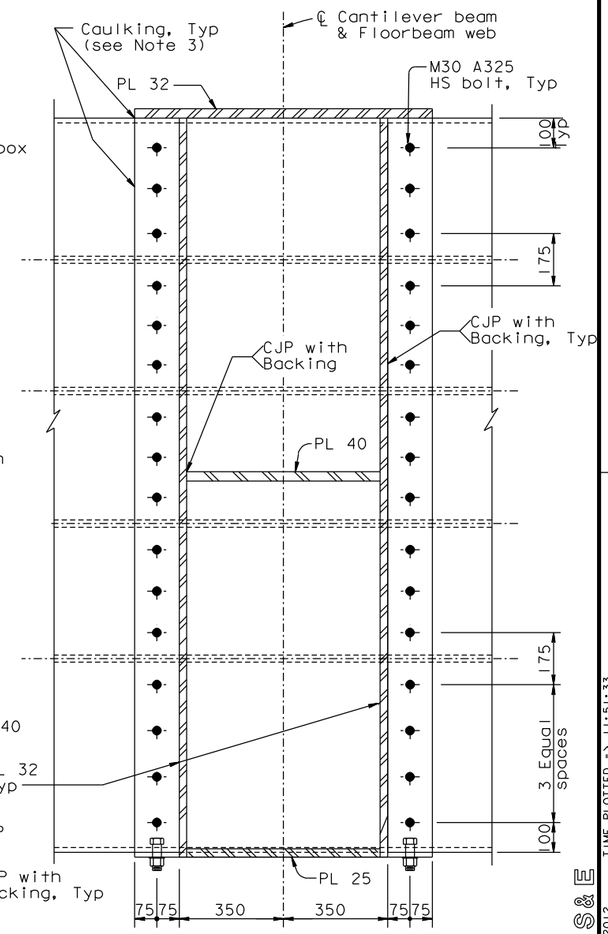

SECTION D-D

1:10

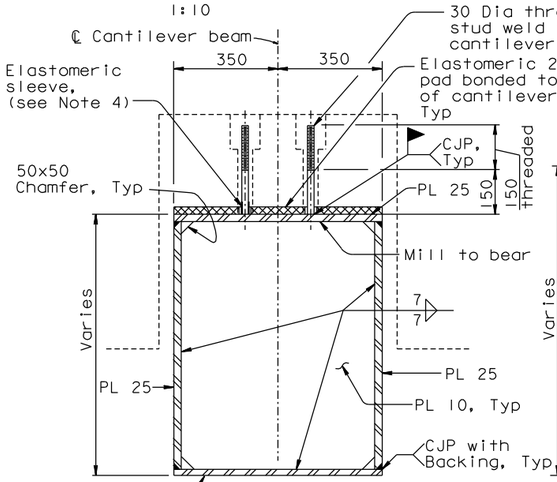

SECTION B-B

1:10

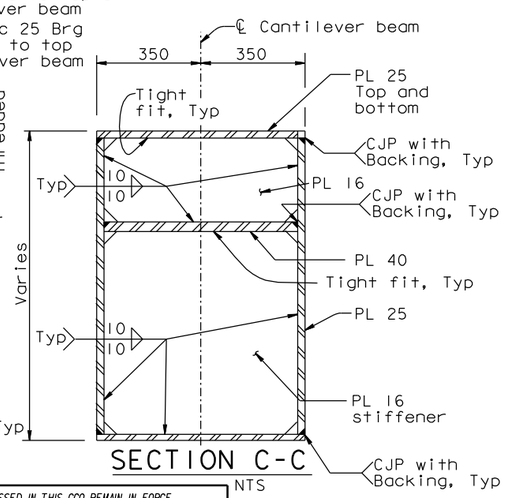

SECTION C-C

NTS

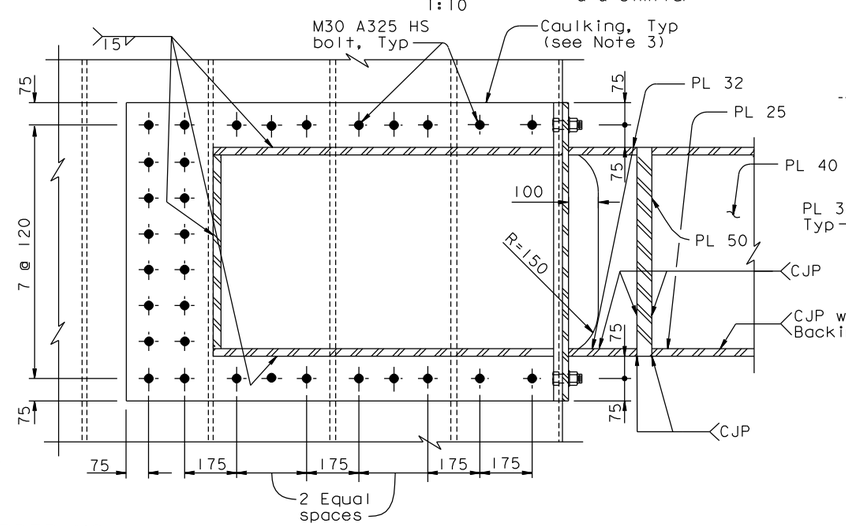

SECTION E-E

1:10

ALL DIMENSIONS ARE IN MILLIMETERS UNLESS OTHERWISE SHOWN

REQUESTS FOR INFORMATION NOT ADDRESSED IN THIS CCO REMAIN IN FORCE

MARK	DATE	DESCRIPTIONS	BY	CH'D	CCO#
5	01/20/12	BIKEPATH CANTILEVER BEAM MODIFICATIONS	DT	TH	233
4	01/25/11	BIKEPATH STUD ISSUE	TH	CC	186
3	08/20/10	BIKEPATH DETAILS	TH	CC	99
2	07/07/08	CAULKING	AS	TH	66
1	07/20/07	BIKEPATH BRACKETS	GB	TH	33

REVISIONS

CONTRACT CHANGE ORDER NO. ____
SHEET ____ OF ____

R. Valizadeh/V. Toan/Y.L./W.L./F.C.
DESIGN OVERSIGHT
SIGN OFF DATE 01/20/12

DESIGN	BY T. Ho	CHECKED T. McMeans	
DETAILS	BY R. Xu	CHECKED P. Ritchie	
QUANTITIES	BY C. Bernardo	CHECKED S. Shi	

PREPARED FOR THE STATE OF CALIFORNIA DEPARTMENT OF TRANSPORTATION

R. Manzanarez
PROJECT ENGINEER

BRIDGE NO. 34-0006L/R
KILOMETER POST 13.2/13.9

SAN FRANCISCO OAKLAND BAY BRIDGE
EAST SPAN SEISMIC SAFETY PROJECT
SELF-ANCHORED SUSPENSION BRIDGE
(SUPERSTRUCTURE & TOWER)

BIKEPATH DETAILS NO. 11

Rev. Date: 5-18-98

ORIGINAL SCALE IN MILLIMETERS FOR REDUCED PLANS 0 10 20 30 40 50 60 70 80 90 100

CU 04
EA 0120F1

DISREGARD PRINTS BEARING EARLIER REVISION DATES

REVISION DATES (PRELIMINARY STAGE ONLY) 05/24/01 04/08/02 07/01/02 12/18/02 11/13/05

SHEET 418R5 OF

FILE => I:\bb\04-012001\sas\contract plans and cco\cco\cco#233\1-original 01-20-12\dgn\agbwd11.dgn

100 % PS&E

USERNAME => DWinrow DATE PLOTTED => 20 JAN 2012 TIME PLOTTED => 11:51:33