DIST.	COUNTY	ROUTE	KILOMETER POST TOTAL PROJECT	SHEET NO.	TOTAL SHEETS
04	SF	80	13.2/13.9	825S1	1204

REGISTERED ENGINEER - CIVIL

10-12-12
PLANS APPROVAL DATE

REGISTERED PROFESSIONAL ENGINEER Marwan N. Nader No. C 054426 Exp. 12/31/13 CIVIL STATE OF CALIFORNIA

The State of California or its officers or agents shall not be responsible for the accuracy or completeness of electronic copies of this plan sheet.

T.Y. LIN / MOFFATT & NICHOL
825 BATTERY STREET
SAN FRANCISCO, CA 94111

Caltrans now has a web site! To get to the web site, go to: http://www.dot.ca.gov

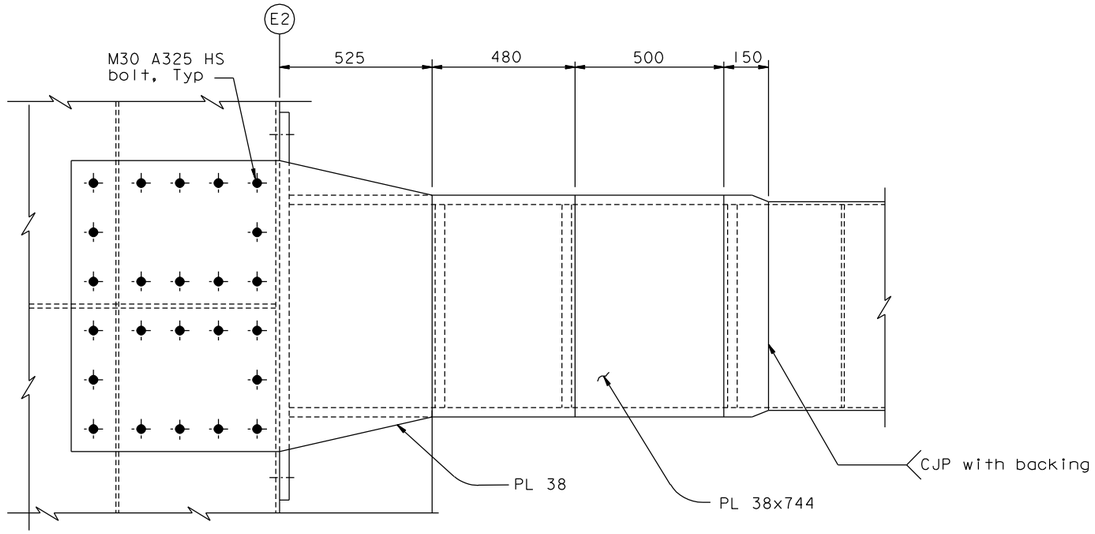

SECTION A-A
1:10

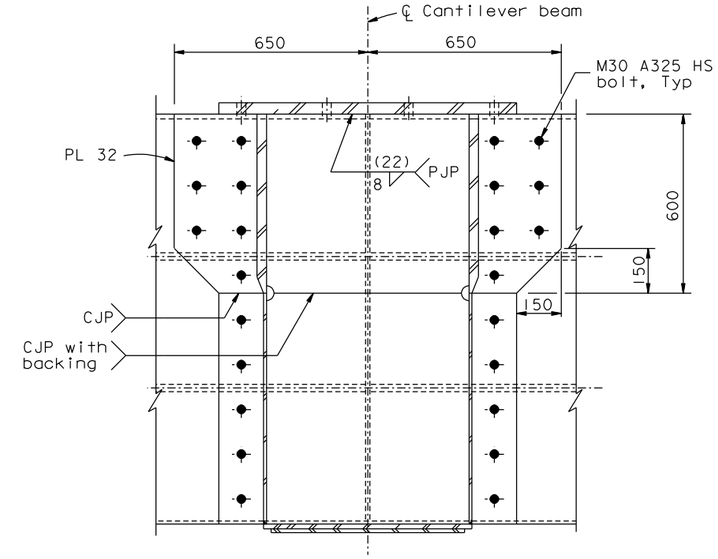

SECTION B-B
1:10

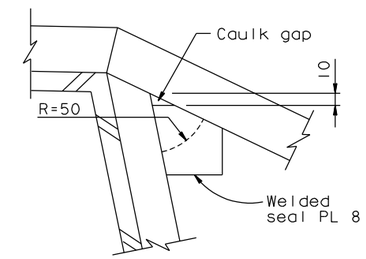

DETAIL A
1:2.5

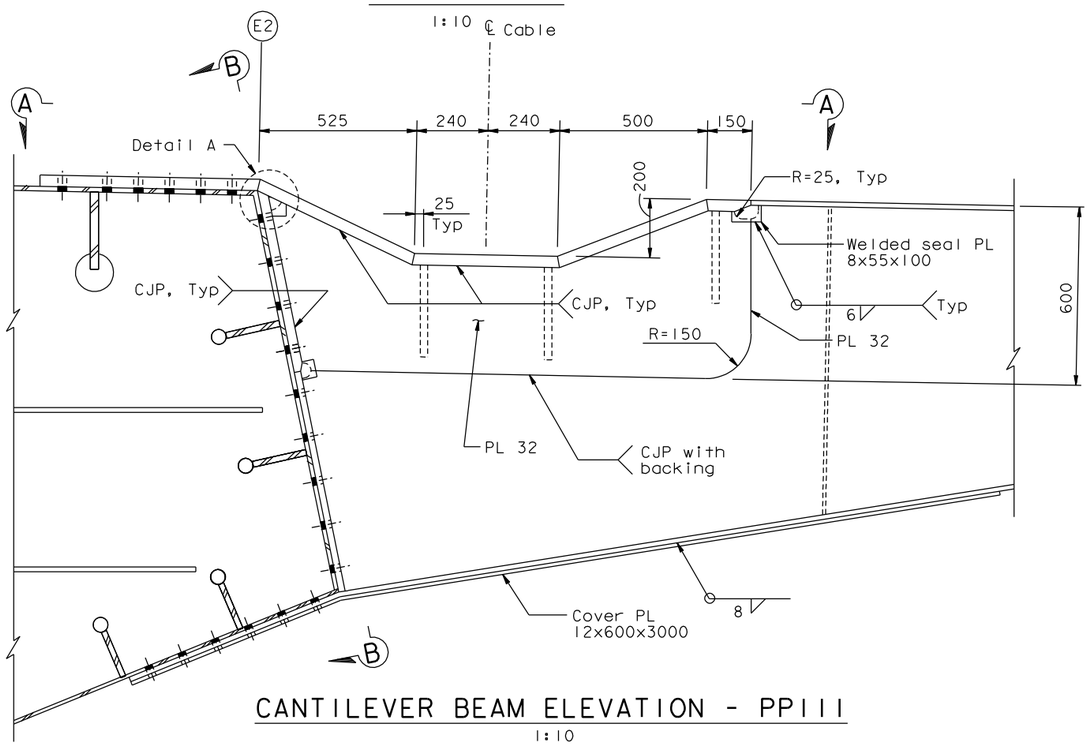

CANTILEVER BEAM ELEVATION - PPIII
1:10

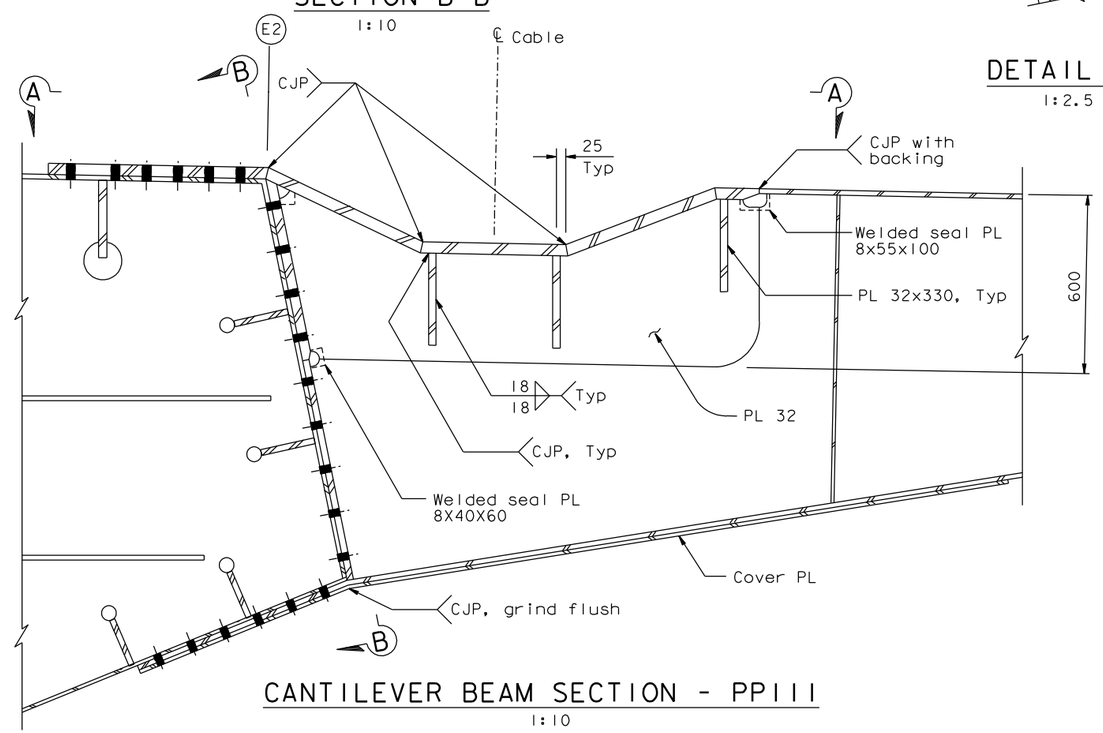

CANTILEVER BEAM SECTION - PPIII
1:10

NOTES:

1. For details not shown, see "Bikepath Details No. 1" sheet.

CONTRACT CHANGE ORDER NO. _____
SHEET ____ OF ____

REQUESTS FOR INFORMATION NOT ADDRESSED IN THIS CCO REMAIN IN FORCE

ALL DIMENSIONS ARE IN MILLIMETERS UNLESS OTHERWISE SHOWN

R. Valizadeh/V. Toan/Y.L./W.L./F.C.
DESIGN OVERSIGHT
SIGN OFF DATE 10/12/12

MARK	DATE	DESCRIPTIONS	BY	CH'D	CCO#
0	10/12/12	CANTILEVER BEAM MODIFICATIONS	GB	MN	233

REVISIONS

DESIGN	BY G. Baker	CHECKED M. Nader	
DETAILS	BY G. Baker	CHECKED M. Nader	
QUANTITIES	BY G. Baker	CHECKED M. Nader	

PREPARED FOR THE STATE OF CALIFORNIA DEPARTMENT OF TRANSPORTATION

R. Manzanarez
PROJECT ENGINEER

BRIDGE NO. 34-0006L/R
KILOMETER POST 13.2/13.9

SAN FRANCISCO OAKLAND BAY BRIDGE
EAST SPAN SEISMIC SAFETY PROJECT
SELF-ANCHORED SUSPENSION BRIDGE
(SUPERSTRUCTURE & TOWER)

BIKEPATH DETAILS NO. 1A

Rev. Date: 5-18-98

ORIGINAL SCALE IN MILLIMETERS FOR REDUCED PLANS 0 10 20 30 40 50 60 70 80 90 100

CU 04
EA 0120F1

DISREGARD PRINTS BEARING EARLIER REVISION DATES 10/12/12

REVISION DATES (PRELIMINARY STAGE ONLY)

SHEET 408S1 OF

FILE => I:\bb\04-012001\sas\contract plans and cco\cco\cco#233\2-revision 10-12-12\dgn\agbwd01a.dgn

100 % PS&E

USERNAME => DWinrow DATE PLOTTED => 11 OCT 2012 TIME PLOTTED => 11:58:15