| DIST. | COUNTY | ROUTE | KILOMETER POST TOTAL PROJECT | SHEET NO. | TOTAL SHEETS |
|---|---|---|---|---|---|
| 04 | SF | 80 | 13.2/13.9 | 825R7 | 1204 |

REGISTERED ENGINEER - CIVIL

12-6-04
PLANS APPROVAL DATE

*The State of California or its officers or agents shall not be responsible for the accuracy or completeness of electronic copies of this plan sheet.*

REGISTERED PROFESSIONAL ENGINEER Tien Hung Ho No. C 43990 Exp. 6/30/13 CIVIL STATE OF CALIFORNIA

T.Y. LIN / MOFFATT & NICHOL
825 BATTERY STREET
SAN FRANCISCO, CA 94111

*Caltrans now has a web site! To get to the web site, go to: http://www.dot.ca.gov*

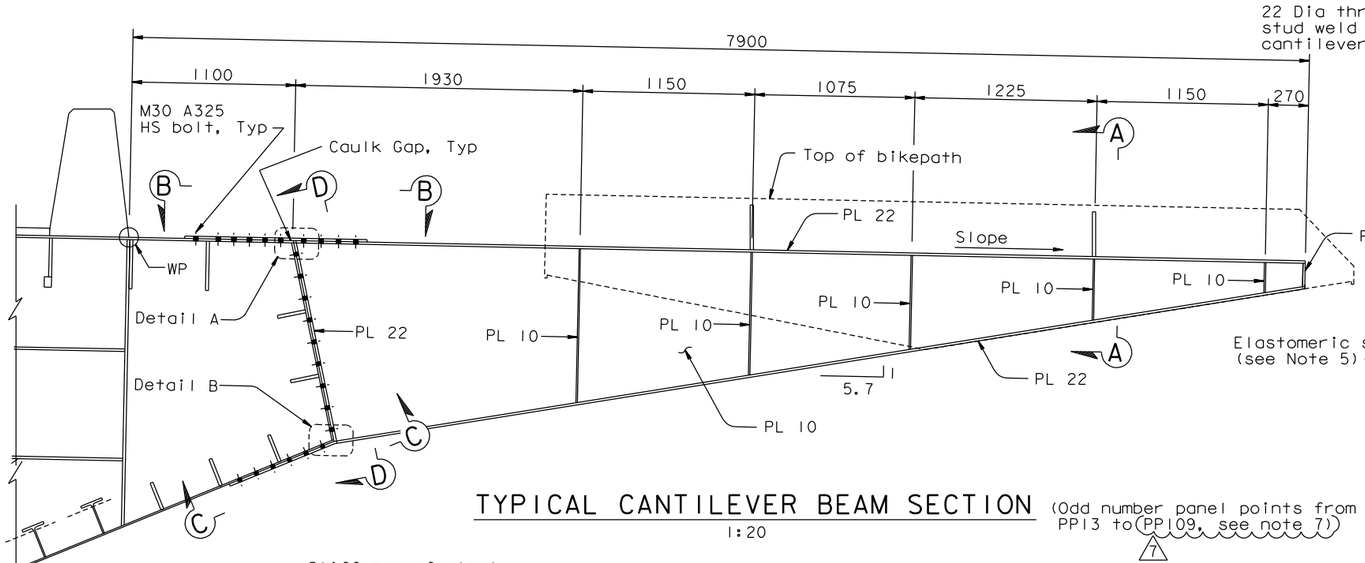


## TYPICAL CANTILEVER BEAM SECTION

1:20

(Odd number panel points from PP13 to PP109, see note 7)

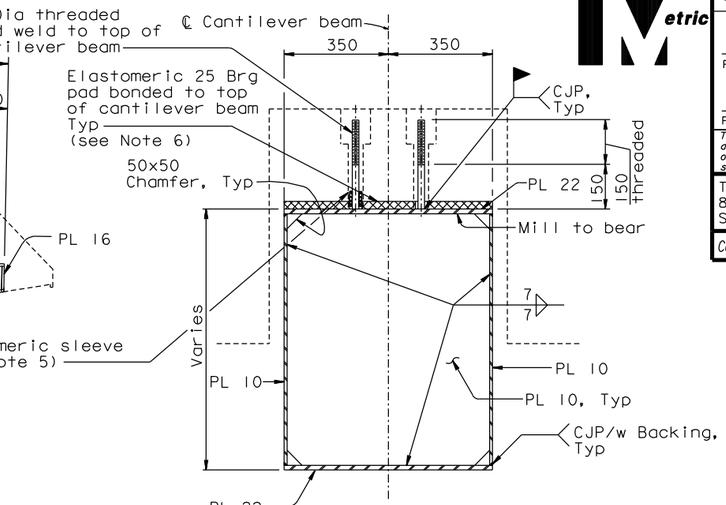


## SECTION A-A

1:10

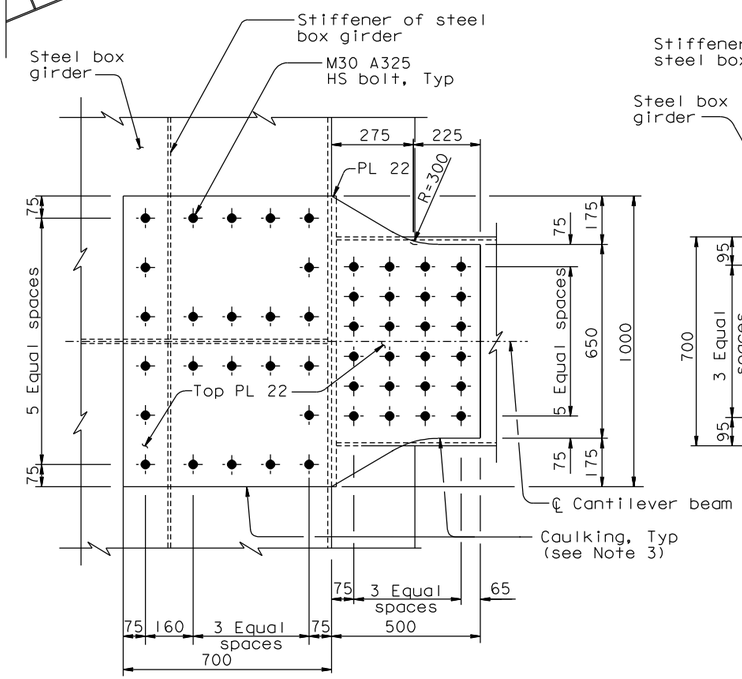


## SECTION B-B

1:10

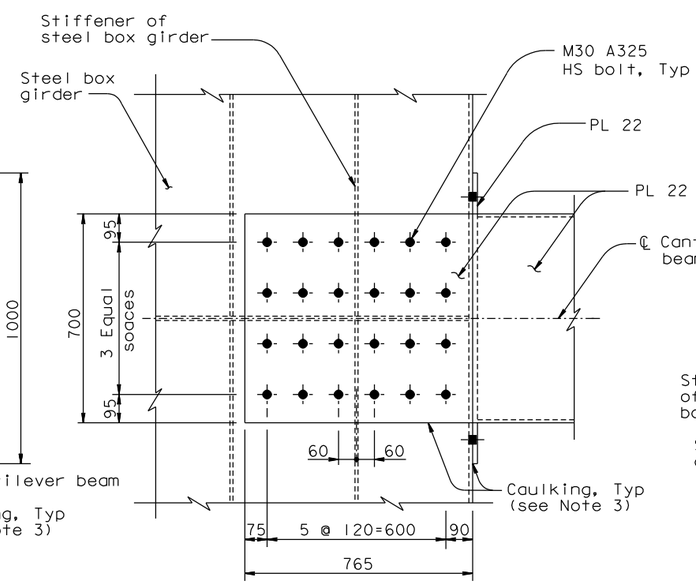


## SECTION C-C

1:10

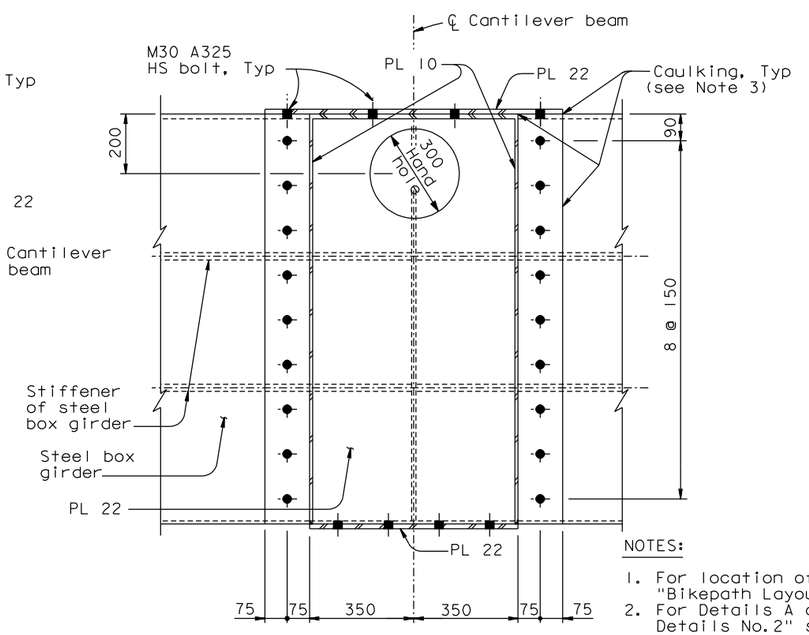


## SECTION D-D

1:10

NOTES:

1. For location of typical cantilever beam, see "Bikepath Layout" sheets.
2. For Details A and B, see "Suspender Bracket Details No. 2" sheet.
3. Caulking shall be provided along all edges of bolted connection between bikepath cantilever beam and box girder.
4. Note deleted.
5. For elastomeric sleeve detail, see "Bikepath Details No. 4A" sheet.
6. For leveling shim details at stud locations, see "Bikepath Details No. 23" sheet.
7. For details at PP111, see "Bikepath Details No. 1A" sheet.

*REQUESTS FOR INFORMATION NOT ADDRESSED IN THIS CCO REMAIN IN FORCE*

| MARK | DATE | DESCRIPTIONS | BY | CH'D | CCO# |
|---|---|---|---|---|---|
| 7 | 10/12/12 | CANTILEVER BEAM MODIFICATIONS | GB | TH | 233 |
| 6 | 08/17/12 | BIKEPATH LEVELING | AB | TH | 228SI |
| 5 | 08/10/11 | BIKEPATH PAD REVISIONS | GB | TH | 211 |
| 4 | 01/25/11 | BIKEPATH STUD ISSUE | CC | TH | 186 |
| 3 | 08/20/10 | BIKEPATH DETAILS | TH | CC | 99 |
| 2 | 07/07/08 | CAULKING | AS | TH | 66 |
| 1 | 07/20/07 | BIKEPATH BRACKETS | GB | TH | 33 |

REVISIONS

CONTRACT CHANGE ORDER NO. _____
SHEET ____ OF ____

ALL DIMENSIONS ARE IN MILLIMETERS UNLESS OTHERWISE SHOWN

R. Valizadeh/V. Toan/Y.L./W.L./F.C.
DESIGN OVERSIGHT
SIGN OFF DATE 10/12/12

| | | | |
|---|---|---|---|
| DESIGN | BY T. Ho | CHECKED T. McMeans | |
| DETAILS | BY R. Xu | CHECKED P. Ritchie | |
| QUANTITIES | BY C. Bernardo | CHECKED S. Shi | |

**PREPARED FOR THE STATE OF CALIFORNIA DEPARTMENT OF TRANSPORTATION**

R. Manzanarez
PROJECT ENGINEER

BRIDGE NO. 34-0006L/R
KILOMETER POST 13.2/13.9

SAN FRANCISCO OAKLAND BAY BRIDGE
EAST SPAN SEISMIC SAFETY PROJECT
SELF-ANCHORED SUSPENSION BRIDGE
(SUPERSTRUCTURE & TOWER)

# BIKEPATH DETAILS NO. 1

Rev. Date: 5-18-98

ORIGINAL SCALE IN MILLIMETERS FOR REDUCED PLANS 0 10 20 30 40 50 60 70 80 90 100

CU 04
EA 0120F1

DISREGARD PRINTS BEARING EARLIER REVISION DATES

REVISION DATES (PRELIMINARY STAGE ONLY): 05/15/99 08/02/99 05/31/01 04/08/02 07/01/02 12/19/02 11/13/05

SHEET 408R7 OF

FILE => I:\bb\04-012001\sas\contract plans and cco\cco\cco#233\2-revision 10-12-12\dgn\agbwd01.dgn

100% PS&E

USERNAME => DWinrow DATE PLOTTED => 11 OCT 2012 TIME PLOTTED => 12:54:10