DIST.	COUNTY	ROUTE	KILOMETER POST TOTAL PROJECT	SHEET NO.	TOTAL SHEETS
04	SF	80	13.2/13.9	1119S3	1204

Caltrans Metric

REGISTERED ENGINEER - CIVIL

01-06-12

PLANS APPROVAL DATE

PROFESSIONAL ENGINEER REGISTERED Bashkim Prishtina No. C 053561 Exp. 6/30/13 CIVIL STATE OF CALIFORNIA

The State of California or its officers or agents shall not be responsible for the accuracy or completeness of electronic copies of this plan sheet.

T.Y. LIN / MOFFATT & NICHOL
825 BATTERY STREET
SAN FRANCISCO, CA 94111

Caltrans now has a web site! To get to the web site, go to: http://www.dot.ca.gov

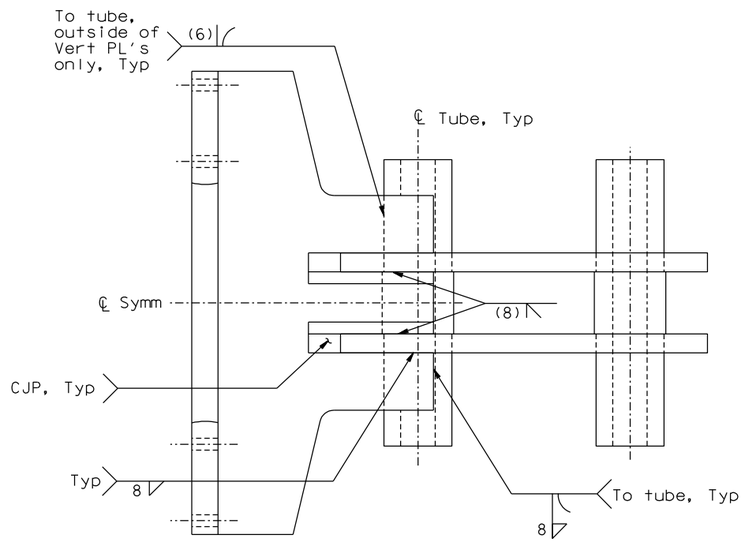

PLAN

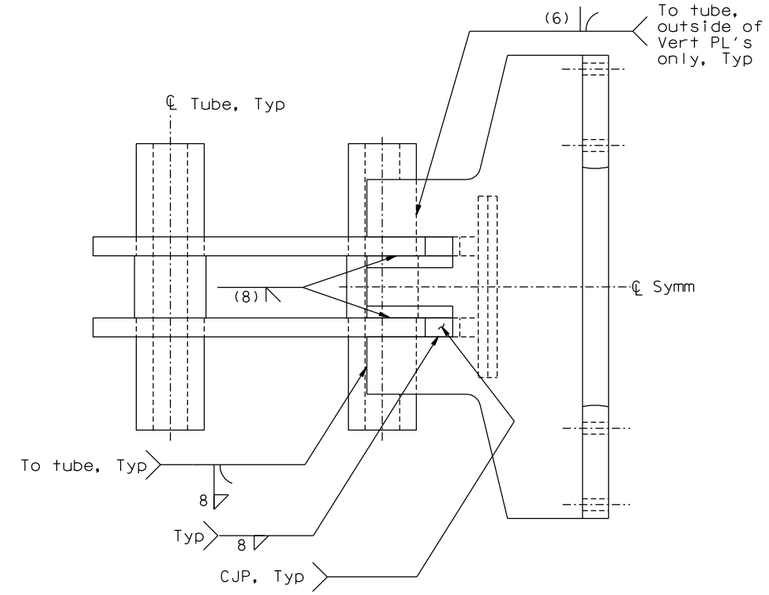

PLAN

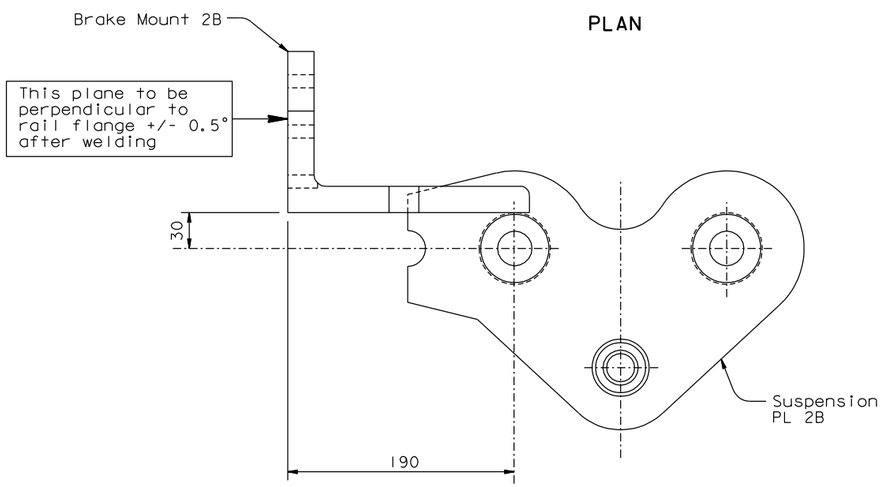

ELEVATION

AT SUSPENSION PLATE 2B

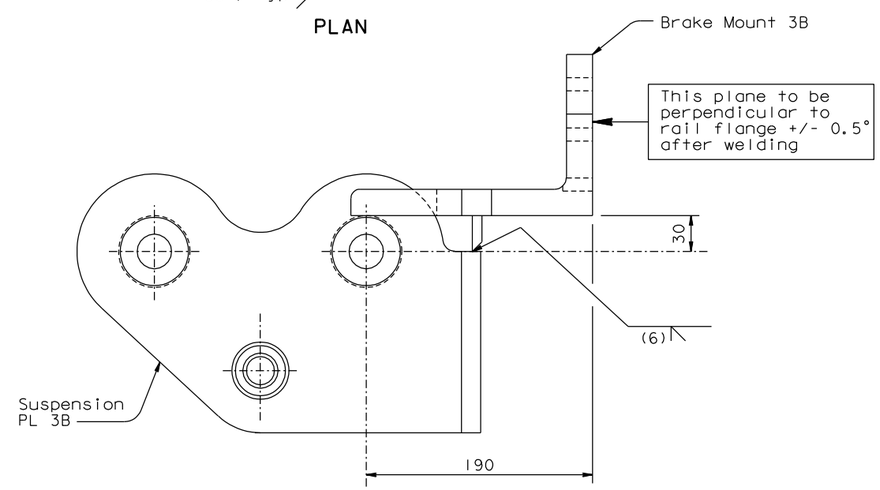

ELEVATION

AT SUSPENSION PLATE 3B

BRAKE MOUNT CONNECTION DETAILS

1:2.5

CONTRACT CHANGE ORDER NO. _____
SHEET ____ OF ____

REQUESTS FOR INFORMATION NOT ADDRESSED IN THIS CCO REMAIN IN FORCE

ALL DIMENSIONS ARE IN MILLIMETERS UNLESS OTHERWISE SHOWN

R. Valizadeh/V. Toan/Y.L./W.L./F.C.
DESIGN OVERSIGHT
SIGN OFF DATE 01/06/12

MARK	DATE	DESCRIPTIONS	BY	CH'D	CCO#
0	01/06/12	TRAVELER BRAKE MOUNT MODIFICATION	AB	BP	232

REVISIONS

	BY	CHECKED
DESIGN	J. Otter	B. Prishtina
DETAILS	A. Baumberger	B. Prishtina
QUANTITIES	A. Baumberger	B. Prishtina

PREPARED FOR THE STATE OF CALIFORNIA DEPARTMENT OF TRANSPORTATION

R. Manzanarez
PROJECT ENGINEER

BRIDGE NO. 34-0006L/R
KILOMETER POST 13.2/13.9

SAN FRANCISCO OAKLAND BAY BRIDGE
EAST SPAN SEISMIC SAFETY PROJECT
SELF-ANCHORED SUSPENSION BRIDGE
(SUPERSTRUCTURE & TOWER)

TRAVELER SUSPENSION DETAILS NO. 11

Rev. Date: 5-18-98

ORIGINAL SCALE IN MILLIMETERS FOR REDUCED PLANS 0 10 20 30 40 50 60 70 80 90 100

CU 04
EA 0120F1

DISREGARD PRINTS BEARING EARLIER REVISION DATES → 01/06/12

REVISION DATES (PRELIMINARY STAGE ONLY)

SHEET 702S3 OF

FILE => I:\bb\04-012001\sas\contract plans and cco\cco\cco#232\1-original 01-06-12\dgn\aktrv111c.dgn

100 % PS&E

USERNAME => arivera DATE PLOTTED => 06 JAN 2012 TIME PLOTTED => 14:05:04