DIST.	COUNTY	ROUTE	KILOMETER POST TOTAL PROJECT	SHEET NO.	TOTAL SHEETS
04	SF	80	13.2/13.9	1119SIR1	1204

Caltrans Metric

REGISTERED ENGINEER - CIVIL

06-19-09

PLANS APPROVAL DATE

REGISTERED PROFESSIONAL ENGINEER Bashkim Prishtina No. C 053561 Exp. 6/30/13 CIVIL STATE OF CALIFORNIA

The State of California or its officers or agents shall not be responsible for the accuracy or completeness of electronic copies of this plan sheet.

T.Y. LIN / MOFFATT & NICHOL
825 BATTERY STREET
SAN FRANCISCO, CA 94111

Caltrans now has a web site! To get to the web site, go to: http://www.dot.ca.gov

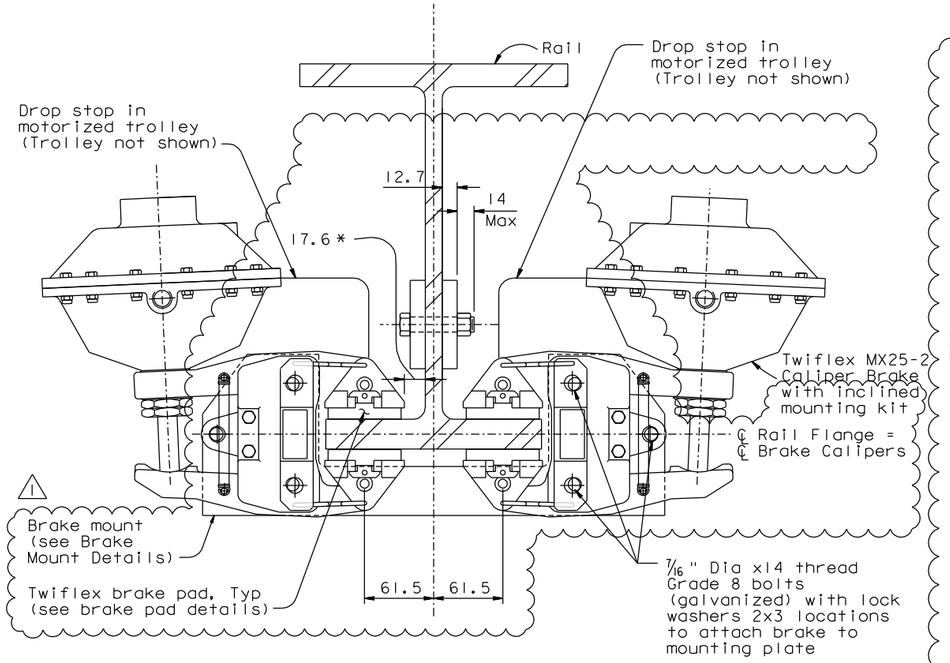

SECTION G-G (Mounting of Twiflex Brake)

1:2.5

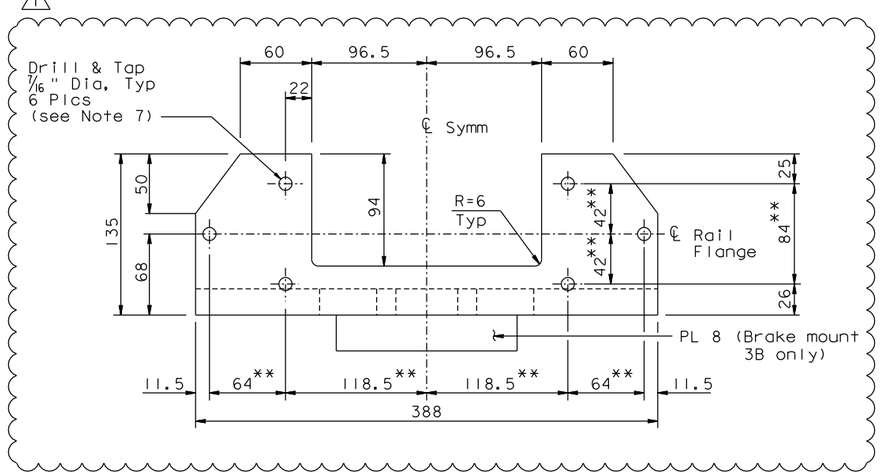

SECTION A-A

1:2.5

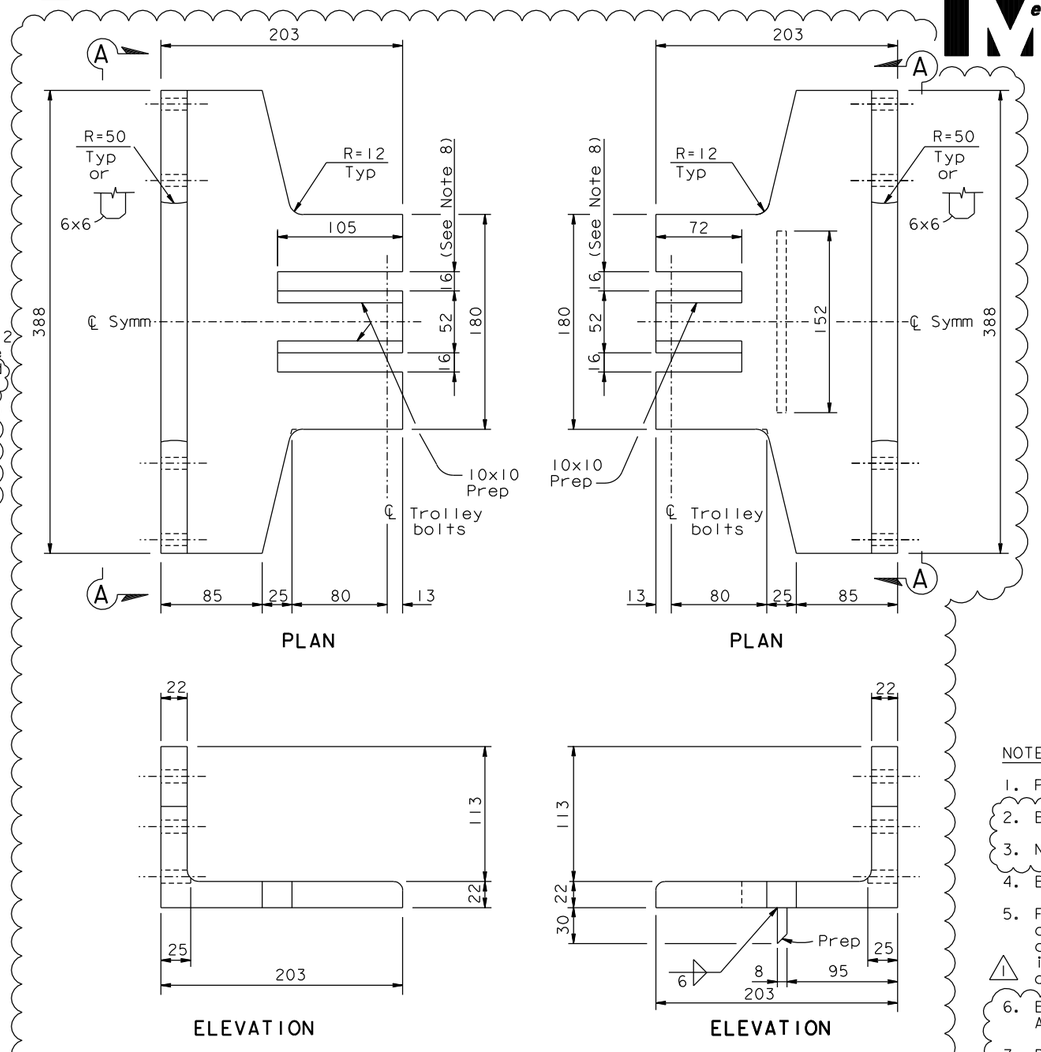

BRAKE MOUNT DETAILS (See Note 6)

1:2.5

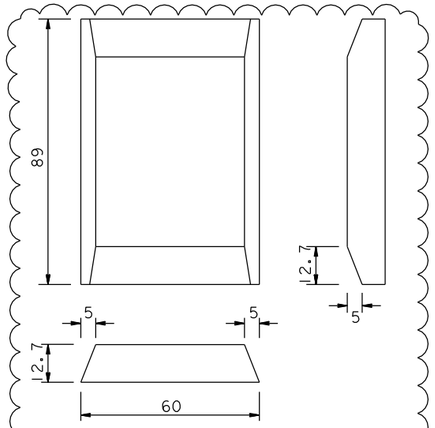

BRAKE PAD DETAILS

1:1

NOTES:

1. Plate - ASTM A572 Grade 50.
2. Brake mount to be painted.
3. NOTE DELETED.
4. Break all edges R=1.0.
5. Fabricator to acquire Twiflex Brakes and ATE Trollies, to measure actual dimensions and to revise plate dimensions if required in order to locate the brake calipers as shown on Section G-G.
6. Brake mounts shall be cut from L 203x203x22 ASTM A572 Grade 50.
7. Drill and tap holes to match brake mount bolts.
8. Nominal dimensions. Adjust to fit as-built suspension plates.

** Coordinate these dimensions with the actual, as-supplied, trolley and brake dimensions and modify as required to position the brakes as shown in "Section G-G".

CONTRACT CHANGE ORDER NO. _____
SHEET ____ OF ____

REQUESTS FOR INFORMATION NOT ADDRESSED IN THIS CCO REMAIN IN FORCE

ALL DIMENSIONS ARE IN MILLIMETERS UNLESS OTHERWISE SHOWN

R. Valizadeh/V. Toan/Y.L./W.L./F.C.
DESIGN OVERSIGHT
SIGN OFF DATE 01/10/12

MARK	DATE	DESCRIPTIONS	BY	CH'D	CCO#
1	01/10/12	TRAVELER BRAKE MOUNT MODIFICATION	BP	AB	232
0	08/26/09	TRAVELER MODIFICATIONS	BP	AS	24SI

REVISIONS

DESIGN	BY J. Otter	CHECKED B. Prishtina	
DETAILS	BY J. Otter	CHECKED M. Roberts	
QUANTITIES	BY J. Otter	CHECKED M. Roberts	

PREPARED FOR THE STATE OF CALIFORNIA DEPARTMENT OF TRANSPORTATION

R. Manzanarez
PROJECT ENGINEER

BRIDGE NO. 34-0006L/R
KILOMETER POST 13.2/13.9

SAN FRANCISCO OAKLAND BAY BRIDGE
EAST SPAN SEISMIC SAFETY PROJECT
SELF-ANCHORED SUSPENSION BRIDGE
(SUPERSTRUCTURE & TOWER)

TRAVELER SUSPENSION DETAILS NO. 9

Rev. Date: 5-18-98

ORIGINAL SCALE IN MILLIMETERS FOR REDUCED PLANS 0 10 20 30 40 50 60 70 80 90 100

CU 04
EA 0120F1

DISREGARD PRINTS BEARING EARLIER REVISION DATES 04/15/02 01/07/02 06/19/09

REVISION DATES (PRELIMINARY STAGE ONLY)

SHEET ___ OF ___

FILE => I:\bb\04-012001\sas\contract plans and cco\cco\cco#232\2-update 01-10-12\dgn\aktrvlla.dgn

100% PS&E

USERNAME => arivera DATE PLOTTED => 09 JAN 2012 TIME PLOTTED => 16:03:38