DIST.	COUNTY	ROUTE	KILOMETER POST TOTAL PROJECT	SHEET NO.	TOTAL SHEETS
04	SF	80	13.2/13.9	1113R3	1204

Caltrans Metric

REGISTERED ENGINEER - CIVIL

12-6-04
PLANS APPROVAL DATE

REGISTERED PROFESSIONAL ENGINEER Bashkim Prishtina No. C 053561 Exp. 6/30/13 CIVIL STATE OF CALIFORNIA

The State of California or its officers or agents shall not be responsible for the accuracy or completeness of electronic copies of this plan sheet.

T.Y. LIN / MOFFATT & NICHOL
825 BATTERY STREET
SAN FRANCISCO, CA 94111

Caltrans now has a web site! To get to the web site, go to: http://www.dot.ca.gov

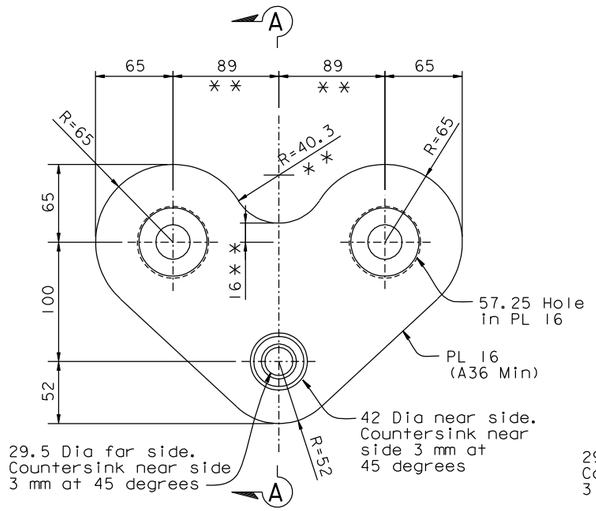

ELEVATION
Type 1A & 1B

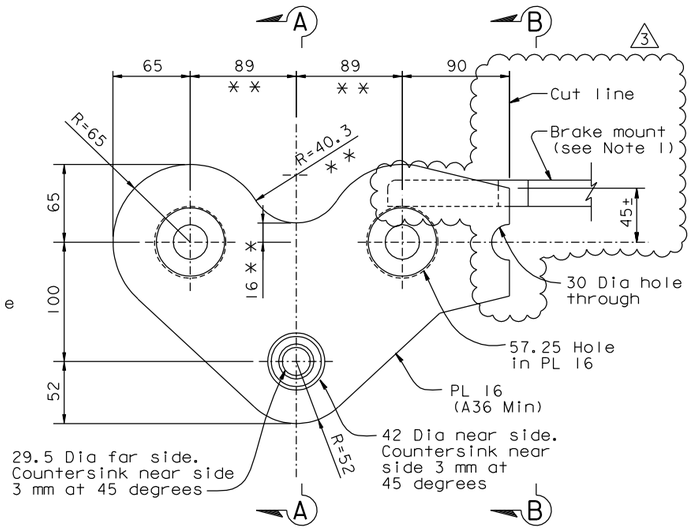

ELEVATION
Type 2B

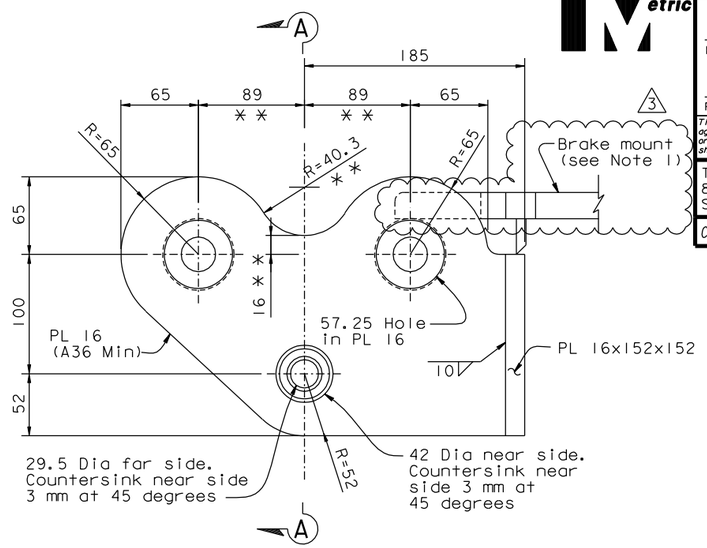

ELEVATION
Type 3B

SUSPENSION PLATE DETAILS

1:2.5

3 NOTES:

1. For brake mount and attachment details, see "Traveler Suspension Details No.9 & 11" sheets.

** Denotes dimension to be co-ordinated with actual trolley dimensions and revised by fabricator if necessary.

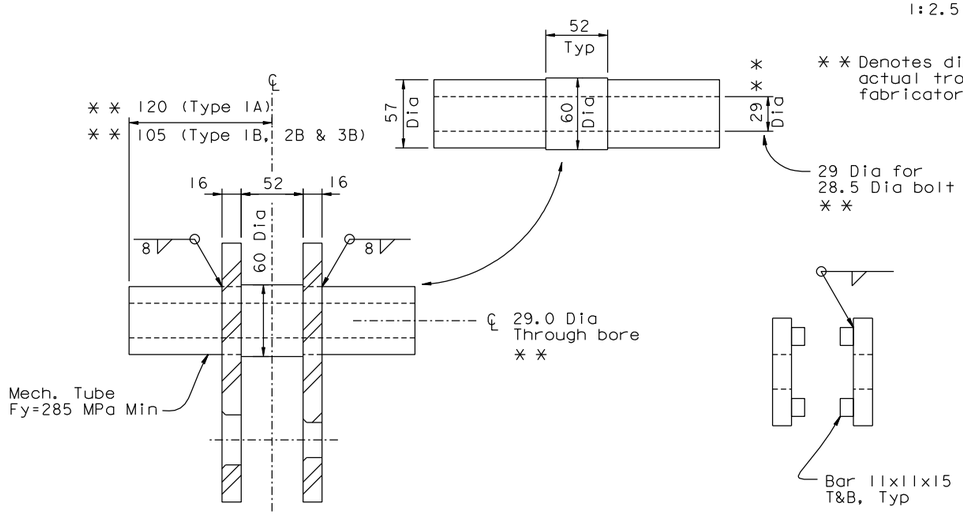

SECTION A-A

1:2.5

SECTION B-B

1:2.5

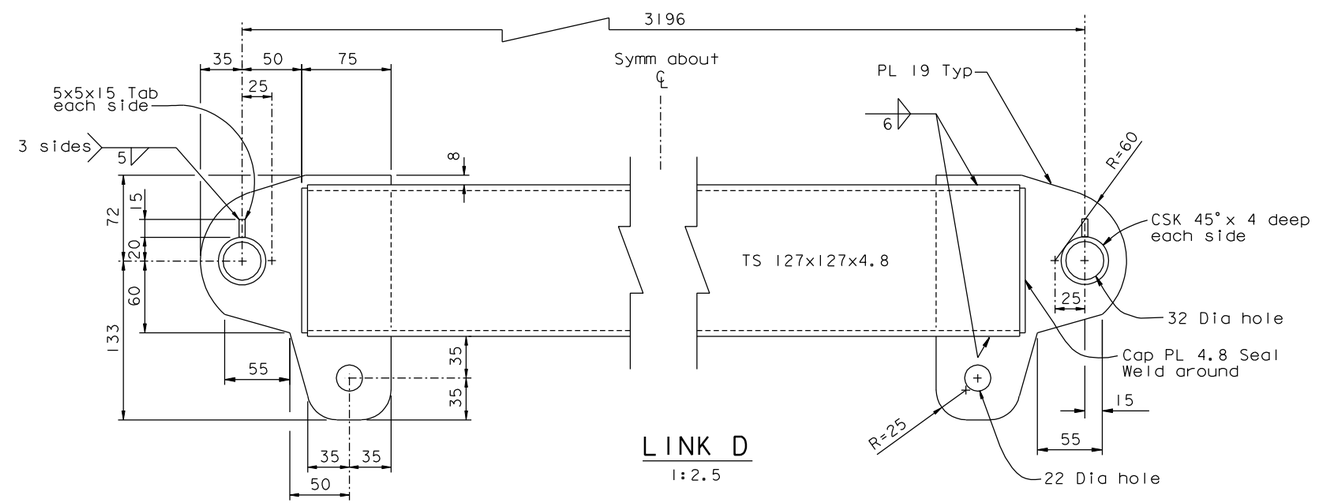

LINK D

1:2.5

REVISION 2 SUPERSEDES REVISION 1

CONTRACT CHANGE ORDER NO. _____
SHEET ____ OF ____

REQUESTS FOR INFORMATION NOT ADDRESSED IN THIS CCO REMAIN IN FORCE

MARK	DATE	DESCRIPTIONS	BY	CH'D	CCO#
3	01/06/12	TRAVELER BRAKE MOUNT MODIFICATION	BP	AB	232
2	06/19/09	TRAVELER MODIFICATIONS	BP	AS	24S1
1	07/20/07	RAIL CHANGE & MISCELLANEOUS DETAILS	BP	NV	24

REVISIONS

R. Valizadeh/V. Toan/Y.L./W.L./F.C.
DESIGN OVERSIGHT
SIGN OFF DATE 01/06/12

	BY	CHECKED
DESIGN	J. Otter	B. Prishtina
DETAILS	J. Otter	M. Roberts
QUANTITIES	J. Otter	M. Roberts

PREPARED FOR THE STATE OF CALIFORNIA DEPARTMENT OF TRANSPORTATION

R. Manzanarez
PROJECT ENGINEER

ALL DIMENSIONS ARE IN MILLIMETERS UNLESS OTHERWISE SHOWN

BRIDGE NO. 34-0006L/R
KILOMETER POST 13.2/13.9

SAN FRANCISCO OAKLAND BAY BRIDGE
EAST SPAN SEISMIC SAFETY PROJECT
SELF-ANCHORED SUSPENSION BRIDGE (SUPERSTRUCTURE & TOWER)

TRAVELER SUSPENSION DETAILS NO. 2

Rev. Date: 5-18-98

ORIGINAL SCALE IN MILLIMETERS FOR REDUCED PLANS 0 10 20 30 40 50 60 70 80 90 100

CU 04
EA 0120F1

DISREGARD PRINTS BEARING EARLIER REVISION DATES

REVISION DATES (PRELIMINARY STAGE ONLY) 04/13/02 07/01/02 12/19/02

SHEET 696R3 OF

FILE => I:\bb\04-012001\sas\contract plans and cco\cco\cco#232\1-original 01-06-12\dgn\aktrv105.dgn

100 % PS&E

USERNAME => grivera DATE PLOTTED => 06 JAN 2012 TIME PLOTTED => 14:06:34