DIST.	COUNTY	ROUTE	KILOMETER POST TOTAL PROJECT	SHEET NO.	TOTAL SHEETS
04	SF	80	13.2/13.9	1111R6	1204

Caltrans Metric

Bashkim Prishtina
REGISTERED ENGINEER - CIVIL

12-6-04
PLANS APPROVAL DATE

REGISTERED PROFESSIONAL ENGINEER Bashkim Prishtina No. C 053561 Exp. 6/30/13 CIVIL STATE OF CALIFORNIA

The State of California or its officers or agents shall not be responsible for the accuracy or completeness of electronic copies of this plan sheet.

T.Y. LIN / MOFFATT & NICHOL
825 BATTERY STREET
SAN FRANCISCO, CA 94111

Caltrans now has a web site! To get to the web site, go to: http://www.dot.ca.gov

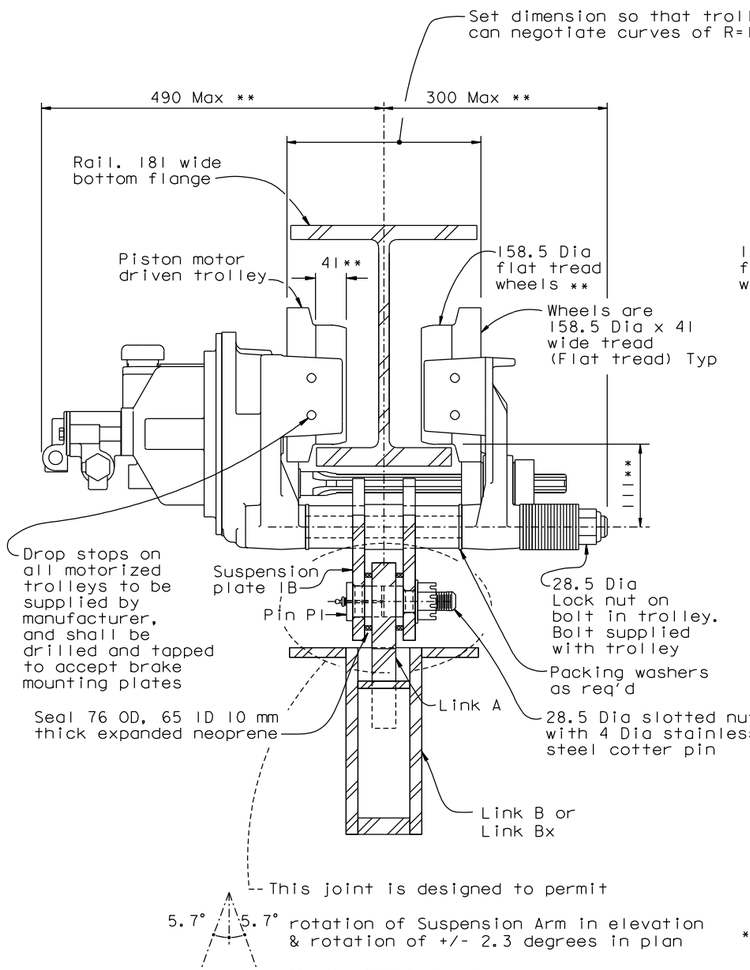

SECTION A-A
1:4

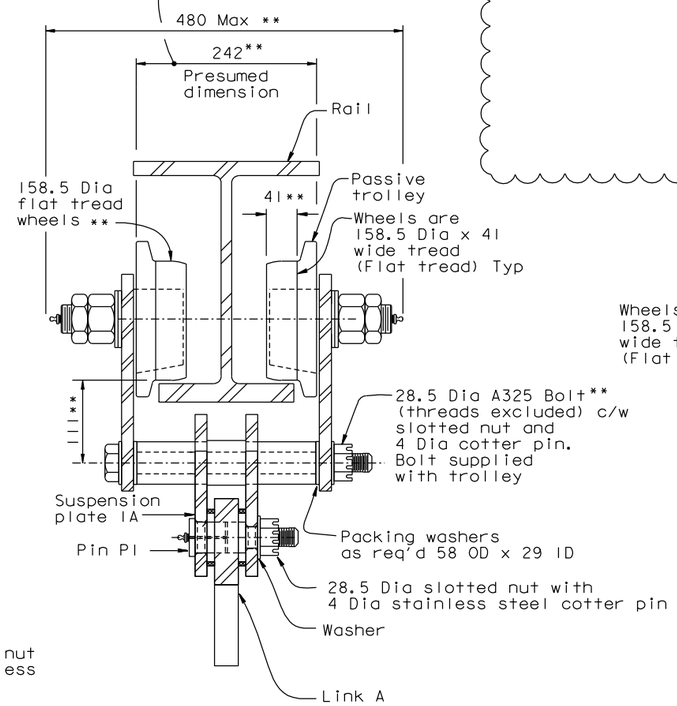

SECTION B-B
1:4

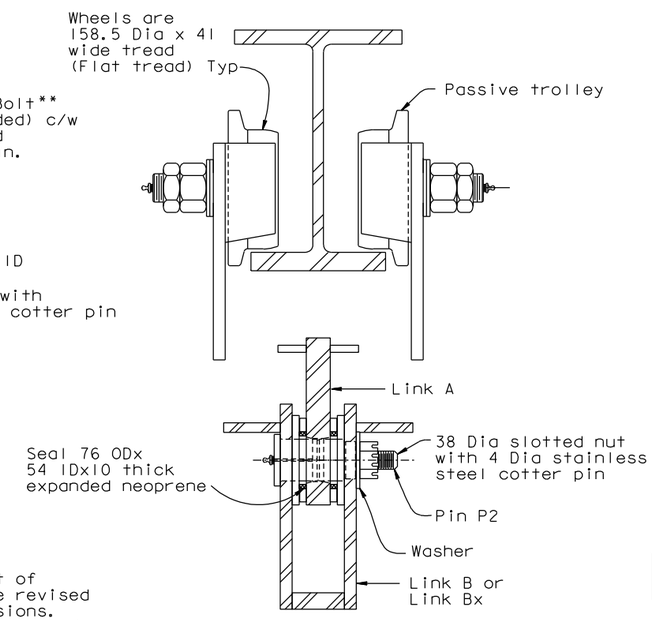

SECTION C-C
1:4

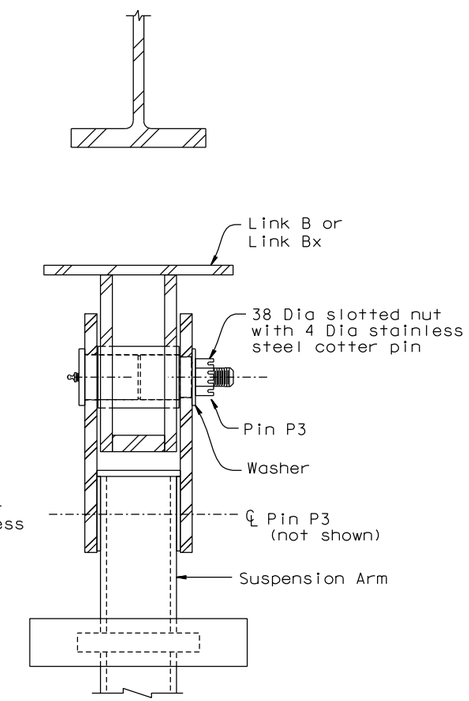

SECTION D-D
1:4

** Denotes dimension to be confirmed by measurement of actual trolleys and brakes etc to be used. To be revised by fabricator if necessary to suit actual dimensions. Trolley shall be installed with the motor facing the edge of the box girder.

SUSPENSION SECTIONS - SAS TROLLEY TRAIN & SKYWAY TROLLEY TRAIN

REVISION 3 SUPERSEDES REVISIONS 1 & 2

CONTRACT CHANGE ORDER NO. _____
SHEET ____ OF ____

REQUESTS FOR INFORMATION NOT ADDRESSED IN THIS CCO REMAIN IN FORCE

MARK	DATE	DESCRIPTIONS	BY	CH'D	CCO#
6	01/06/12	TRAVELER BRAKE MOUNT MODIFICATION	AB	BP	232
5	07/09/10	TRAVELER MODIFICATIONS	BP	AS	24S1
4	02/12/10	TRAVELER MODIFICATIONS	BP	AS	24S1
3	08/21/09	TRAVELER MODIFICATIONS	BP	AS	24S1
2	07/20/07	RAIL CHANGE & MISCELLANEOUS DETAILS	BP	NV	24
1	08/04/06	TRAVELER RAILS	BP	NV	24

REVISIONS

Parts List & Drawing Location

Passive Trolley	Traveler Suspension Details No.1 sheet.	Pins	Traveler Suspension Details No.3 sheet.
Suspension Plates	Traveler Suspension Details No.2 sheet.	Suspension Arm	Traveler Suspension Details No.8 sheet.
Link A	Traveler Suspension Details No.3 sheet.	Upper Suspension Arm	Traveler Suspension Details No.4 sheet.
Link B & Link BX	Traveler Suspension Details No.4 sheet.	Bearing Block	Traveler Suspension Details No.8 sheet.
Link D	Traveler Suspension Details No.2 sheet.		

ALL DIMENSIONS ARE IN MILLIMETERS UNLESS OTHERWISE SHOWN

R. Valizadeh/V. Toan/Y.L./W.L./F.C.
DESIGN OVERSIGHT
Roya Valizadeh / Vong Toan / Y. Liu
SIGN OFF DATE 01/06/12

	BY		CHECKED
DESIGN	J. Otter	B. Prishtina	
DETAILS	J. Otter	M. Roberts	
QUANTITIES	J. Otter	M. Roberts	

PREPARED FOR THE STATE OF CALIFORNIA DEPARTMENT OF TRANSPORTATION

R. Manzanarez
PROJECT ENGINEER

BRIDGE NO. 34-0006L/R
KILOMETER POST 13.2/13.9

SAN FRANCISCO OAKLAND BAY BRIDGE
EAST SPAN SEISMIC SAFETY PROJECT
SELF-ANCHORED SUSPENSION BRIDGE
(SUPERSTRUCTURE & TOWER)

TRAVELER SUSPENSION SECTIONS

Rev. Date: 5-18-98

ORIGINAL SCALE IN MILLIMETERS FOR REDUCED PLANS 0 10 20 30 40 50 60 70 80 90 100

CU 04
EA 0120F1

DISREGARD PRINTS BEARING EARLIER REVISION DATES

REVISION DATES (PRELIMINARY STAGE ONLY) 04/15/02 01/09/02 12/19/02

SHEET 694R6 OF

FILE => I:\bb\04-012001\sas\contract plans and cco\cco\cco#232\1-original 01-06-12\dgn\aktrv103.dgn

100% PS&E

USERNAME => DWinrow DATE PLOTTED => 06 JAN 2012 TIME PLOTTED => 11:51:01