DIST.	COUNTY	ROUTE	KILOMETER POST TOTAL PROJECT	SHEET NO.	TOTAL SHEETS
04	SF	80	13.2/13.9	897R5	1204

Caltrans Metric

REGISTERED ENGINEER - CIVIL

12-6-04
PLANS APPROVAL DATE

REGISTERED PROFESSIONAL ENGINEER Tien Hung Ho No. C 43990 Exp. 6/30/13 CIVIL STATE OF CALIFORNIA

The State of California or its officers or agents shall not be responsible for the accuracy or completeness of electronic copies of this plan sheet.

T.Y. LIN / MOFFATT & NICHOL
825 BATTERY STREET
SAN FRANCISCO, CA 94111

Caltrans now has a web site! To get to the web site, go to: http://www.dot.ca.gov

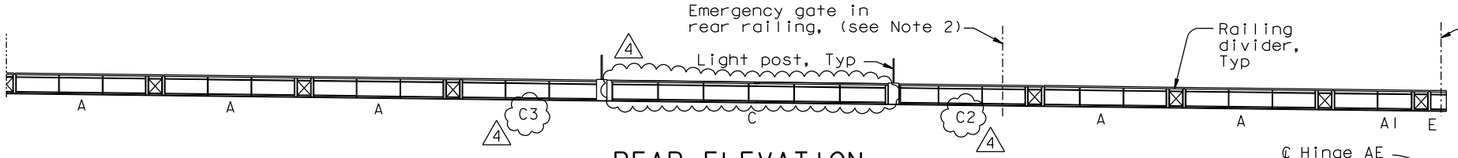

REAR ELEVATION
1:200

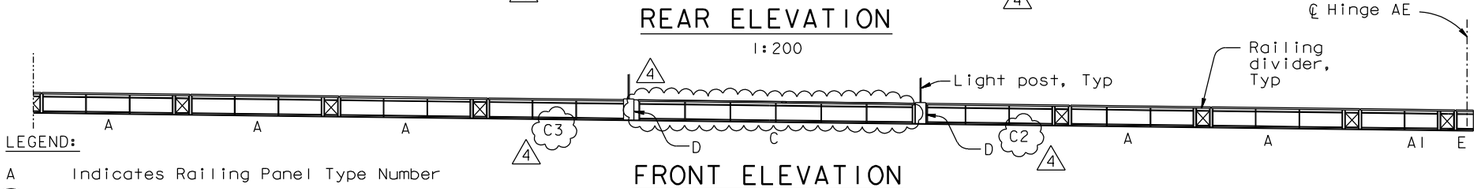

FRONT ELEVATION
1:200

LEGEND:

A Indicates Railing Panel Type Number

(51) Indicates Panel Point

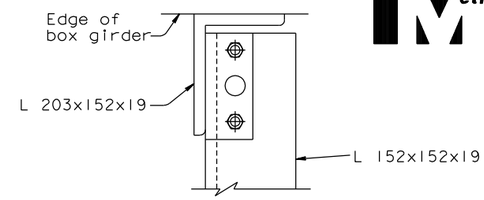

DETAIL F
1:5
(Grating not shown for clarity)

(Detail F shown Detail E similar)

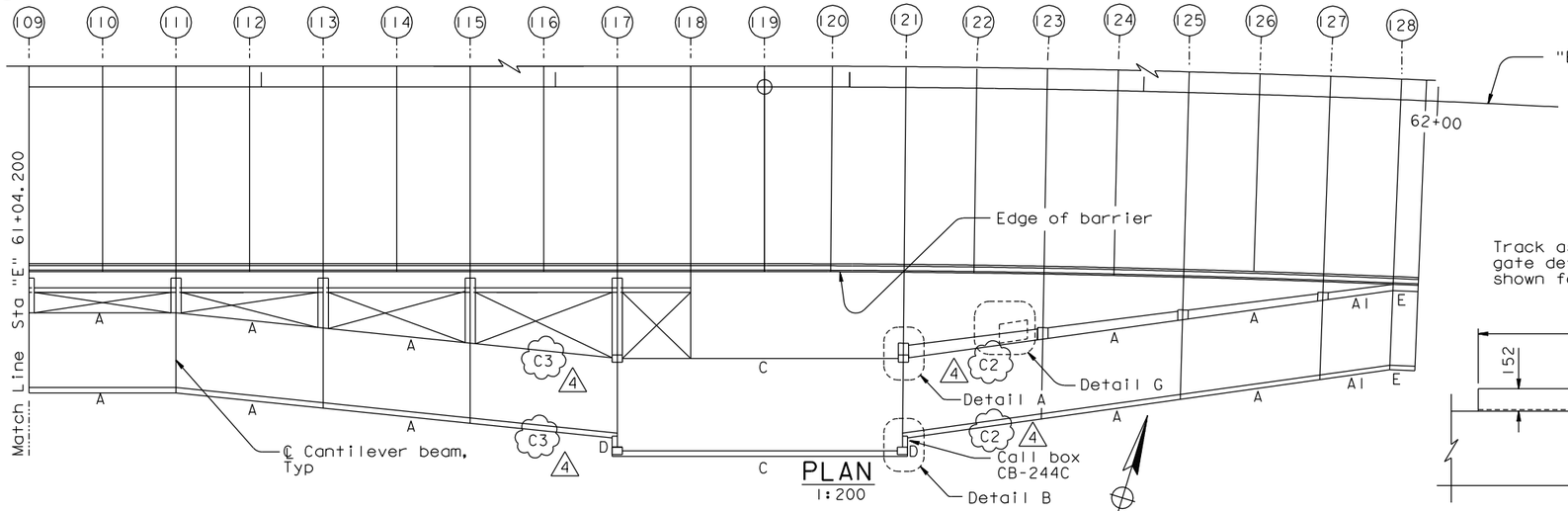

PLAN
1:200

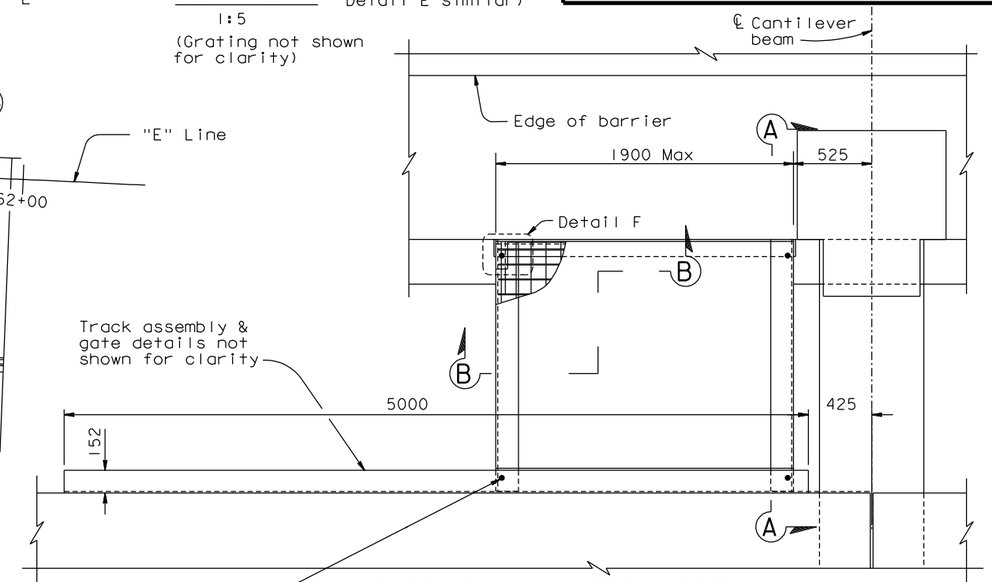

EMERGENCY ACCESS DETAIL
1:20

NOTES:

1. For railing panel Type A through Type E, see "Railing Details No.1" sheet.
2. For emergency gate details and details not shown on Detail D, see "Railing Details No.5" sheet.
3. For Detail A and Detail B, see "Railing Details No.4" sheet.
4. For call box location and details, see "Road Plans".
5. For Detail G and Detail H, see "Railing Layout No.3A" sheet. 5

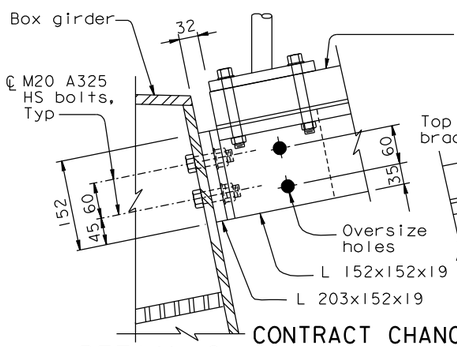

DETAIL C
1:5
(Grating not shown for clarity)

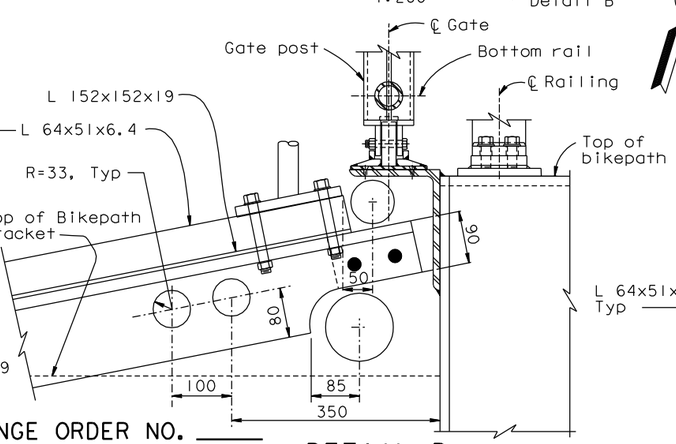

DETAIL D
1:5
(Grating not shown for clarity)

(See Note 2)

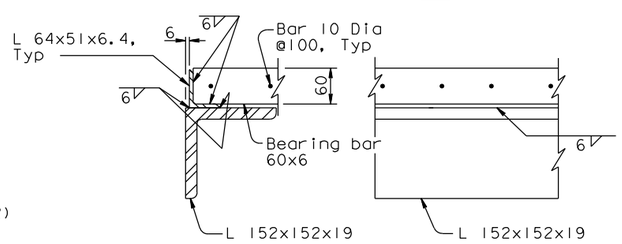

SECTION B-B
1:5

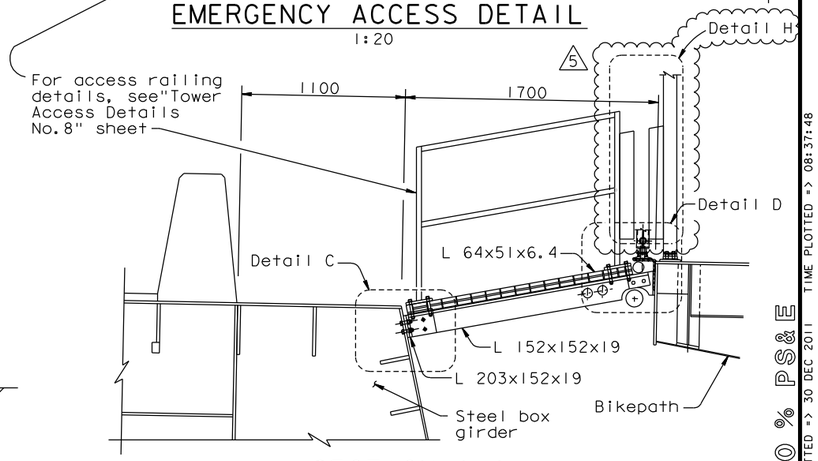

SECTION A-A
1:20

ALL DIMENSIONS ARE IN MILLIMETERS UNLESS OTHERWISE SHOWN

CONTRACT CHANGE ORDER NO. ____
SHEET ___ OF ___

REQUESTS FOR INFORMATION NOT ADDRESSED IN THIS CCO REMAIN IN FORCE

MARK	DATE	DESCRIPTIONS	BY	CH'D	CCO#
5	12/30/11	EMERGENCY ACCESS RAILING MODIFICATIONS	HT	TH	231
4	11/12/10	BIKEPATH HANDRAIL MODIFICATIONS	TH	JD	169
3	08/20/10	BIKEPATH DETAILS	TH	MN	99
2	11/26/08	BIKEPATH DETAILS	TH	MN	99
1	09/07/07	MECHANICAL MODIFICATIONS	JD	TH	31

REVISIONS

R. Valizadeh/V. Toan/Y.L./W.L./F.C.
DESIGN OVERSIGHT
SIGN OFF DATE 12/30/11

	BY	CHECKED
DESIGN	T. Ho	C. Redfield
DETAILS	R. Xu	C. Redfield
QUANTITIES	G. Baker	K. Cormier

PREPARED FOR THE STATE OF CALIFORNIA DEPARTMENT OF TRANSPORTATION

R. Manzanarez
PROJECT ENGINEER

BRIDGE NO. 34-0006L/R
KILOMETER POST 13.2/13.9

SAN FRANCISCO OAKLAND BAY BRIDGE
EAST SPAN SEISMIC SAFETY PROJECT
SELF-ANCHORED SUSPENSION BRIDGE
(SUPERSTRUCTURE & TOWER)

RAILING LAYOUT NO. 3

Rev. Date: 5-18-98

ORIGINAL SCALE IN MILLIMETERS FOR REDUCED PLANS 0 10 20 30 40 50 60 70 80 90 100

CU 04
EA 0120F1

DISREGARD PRINTS BEARING EARLIER REVISION DATES

REVISION DATES (PRELIMINARY STAGE ONLY) 05/18/99 08/02/99 05/31/01 04/08/02 07/01/02 12/19/02

SHEET 480R5 OF

FILE => I:\bb\04-012001\sas\contract plans and cco\cco\cco*231\1-original 12-30-11\dgn\akrlg03.dgn

USERNAME => arivera DATE PLOTTED => 30 DEC 2011 TIME PLOTTED => 08:37:48

100% PS&E

DIST.	COUNTY	ROUTE	KILOMETER POST TOTAL PROJECT	SHEET NO.	TOTAL SHEETS
04	SF	80	13.2/13.9	897SIR1	1204

Caltrans Metric

REGISTERED ENGINEER - CIVIL

11-26-08
PLANS APPROVAL DATE

REGISTERED PROFESSIONAL ENGINEER Tien Hung Ho No. C 43990 Exp. 6/03/13 CIVIL STATE OF CALIFORNIA

The State of California or its officers or agents shall not be responsible for the accuracy or completeness of electronic copies of this plan sheet.

T.Y. LIN / MOFFATT & NICHOL
825 BATTERY STREET
SAN FRANCISCO, CA 94111

Caltrans now has a web site! To get to the web site, go to: http://www.dot.ca.gov

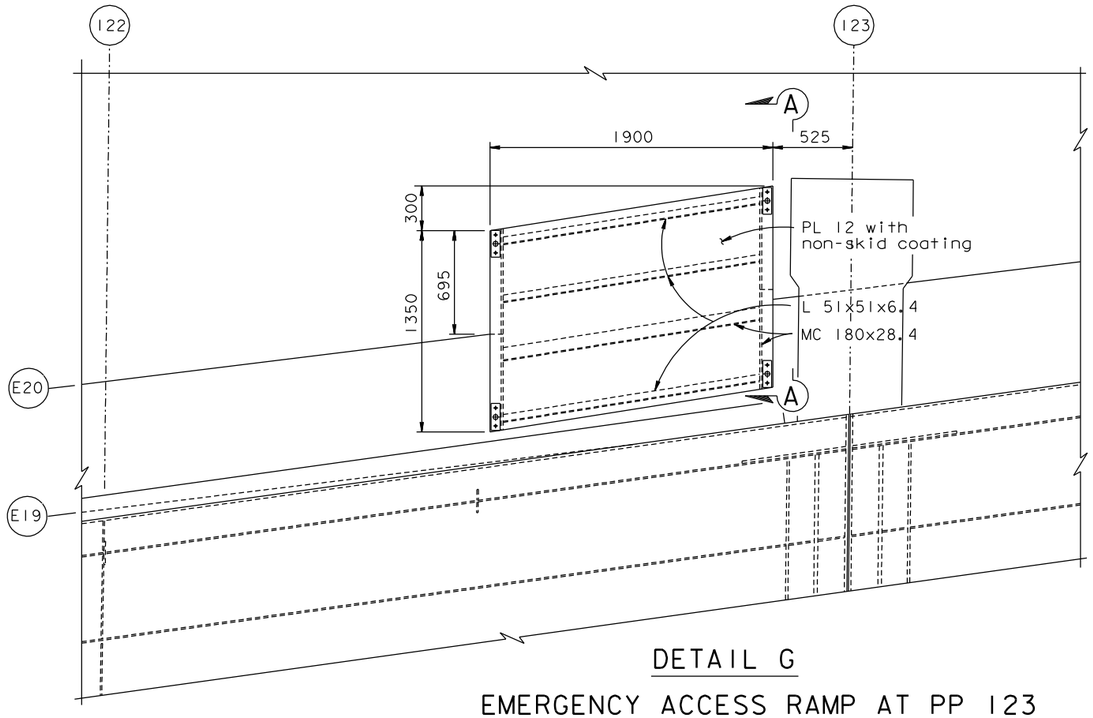

DETAIL G
EMERGENCY ACCESS RAMP AT PP 123
1:20

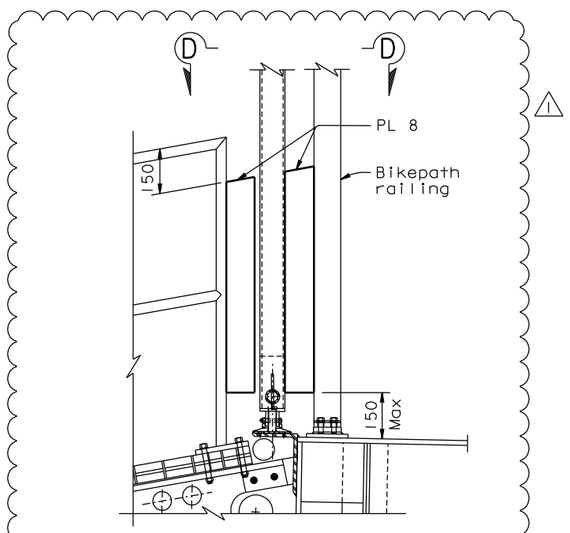

DETAIL H (At PP 15, 47 & 79)
1:10

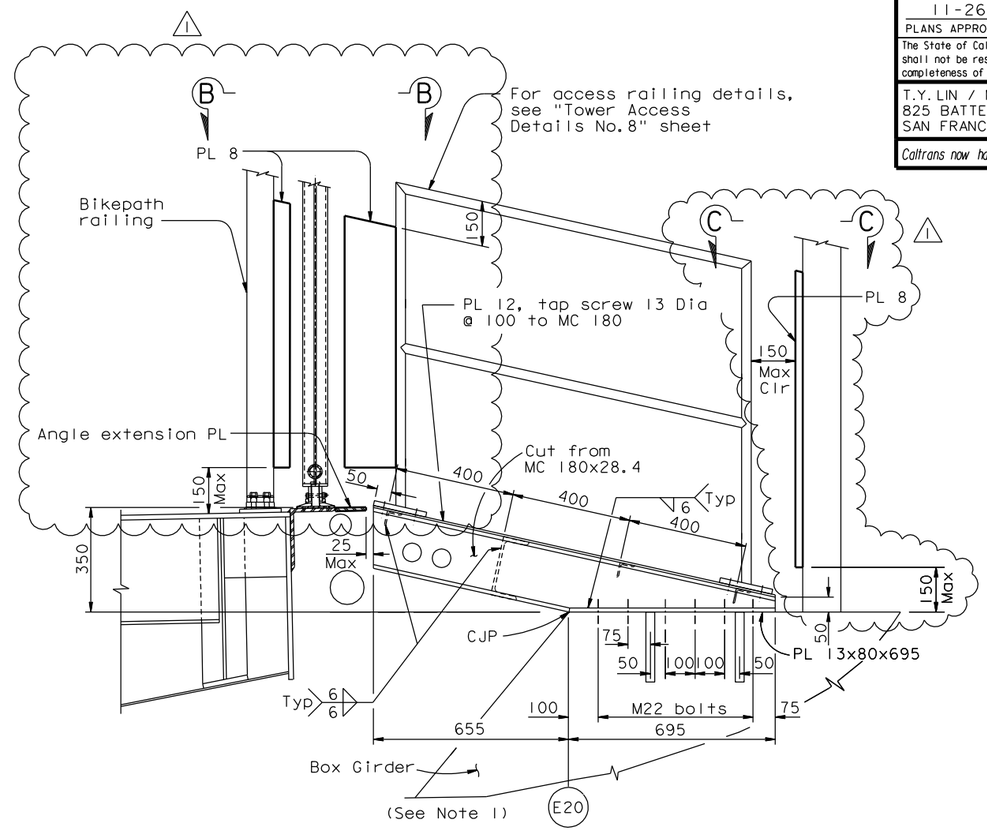

SECTION A-A
1:10

NOTES:

1. For details not shown, see "Railing Layout No. 3" sheet.
2. For Views B-B, C-C and D-D, see "Railing Layout No. 3B" sheet.

CONTRACT CHANGE ORDER NO. _____
SHEET ____ OF ____

REQUESTS FOR INFORMATION NOT ADDRESSED IN THIS CCO REMAIN IN FORCE

ALL DIMENSIONS ARE IN MILLIMETERS UNLESS OTHERWISE SHOWN

R. Valizadeh/V. Toan/Y.L./W.L./F.C.
DESIGN OVERSIGHT
Roya Valizadeh / Vong Toan / Y. Liu
SIGN OFF DATE 12/30/11

MARK	DATE	DESCRIPTIONS	BY	CH'D	CCO#
1	12/30/11	EMERGENCY ACCESS RAILING MODIFICATIONS	HT	TH	231
0	11/26/08	BIKEPATH DETAILS	TH	MN	99

REVISIONS

	BY	CHECKED
DESIGN	T. Ho	M. Nader
DETAILS	T. Ho	M. Nader
QUANTITIES	T. Ho	M. Nader

PREPARED FOR THE STATE OF CALIFORNIA DEPARTMENT OF TRANSPORTATION

R. Manzanarez
PROJECT ENGINEER

BRIDGE NO. 34-0006L/R
KILOMETER POST 13.2/13.9

SAN FRANCISCO OAKLAND BAY BRIDGE
EAST SPAN SEISMIC SAFETY PROJECT
SELF-ANCHORED SUSPENSION BRIDGE
(SUPERSTRUCTURE & TOWER)

RAILING LAYOUT NO. 3A

Rev. Date: 5-18-98

ORIGINAL SCALE IN MILLIMETERS FOR REDUCED PLANS 0 10 20 30 40 50 60 70 80 90 100

CU 04
EA 0120F1

DISREGARD PRINTS BEARING EARLIER REVISION DATES 11/26/08

REVISION DATES (PRELIMINARY STAGE ONLY)

SHEET 480SIR1 OF

FILE => I:\bb\04-012001\sas\contract plans and cco\cco\cco#231\1-original 12-30-11\dgn\akrlg03s01.dgn

100 % PS&E

USERNAME => arivera DATE PLOTTED => 30 DEC 2011 TIME PLOTTED => 08:39:40

DIST.	COUNTY	ROUTE	KILOMETER POST TOTAL PROJECT	SHEET NO.	TOTAL SHEETS
04	SF	80	13.2/13.9	897S2	1204

REGISTERED ENGINEER - CIVIL

12-30-11
PLANS APPROVAL DATE

REGISTERED PROFESSIONAL ENGINEER James P. Duxbury No. C 64677 Exp. 06/30/13 CIVIL STATE OF CALIFORNIA

The State of California or its officers or agents shall not be responsible for the accuracy or completeness of electronic copies of this plan sheet.

T.Y. LIN / MOFFATT & NICHOL
825 BATTERY STREET
SAN FRANCISCO, CA 94111

Caltrans now has a web site! To get to the web site, go to: http://www.dot.ca.gov

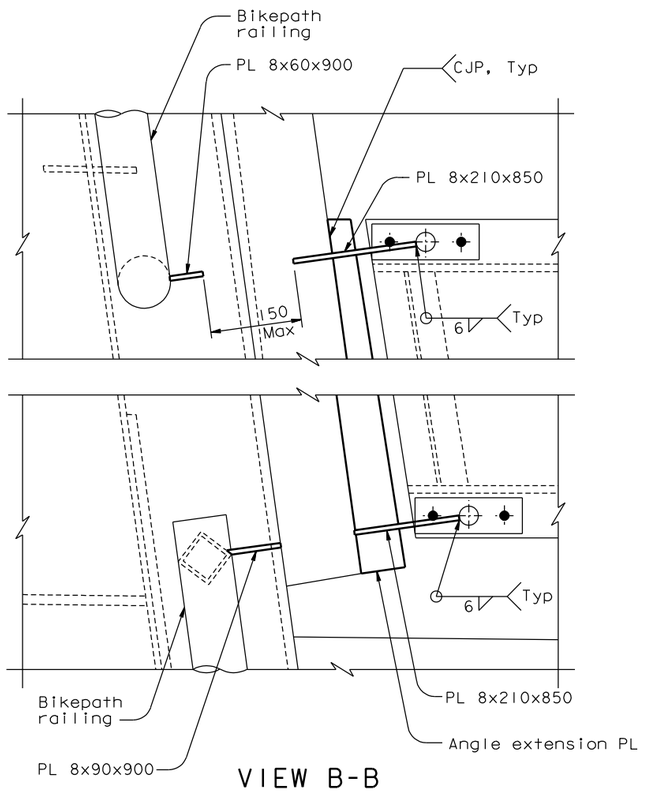

VIEW B-B
1:5

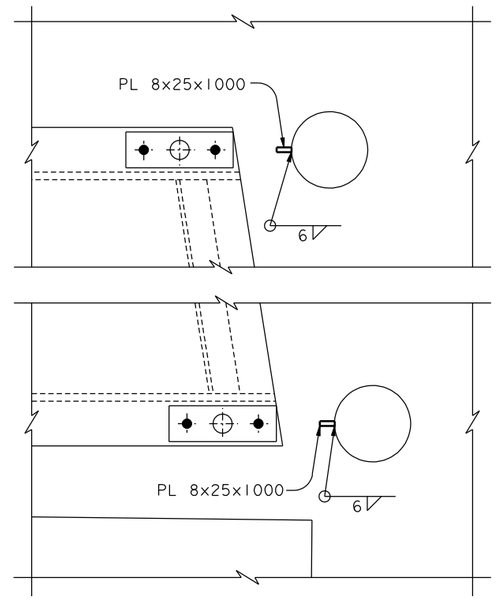

VIEW C-C
1:5

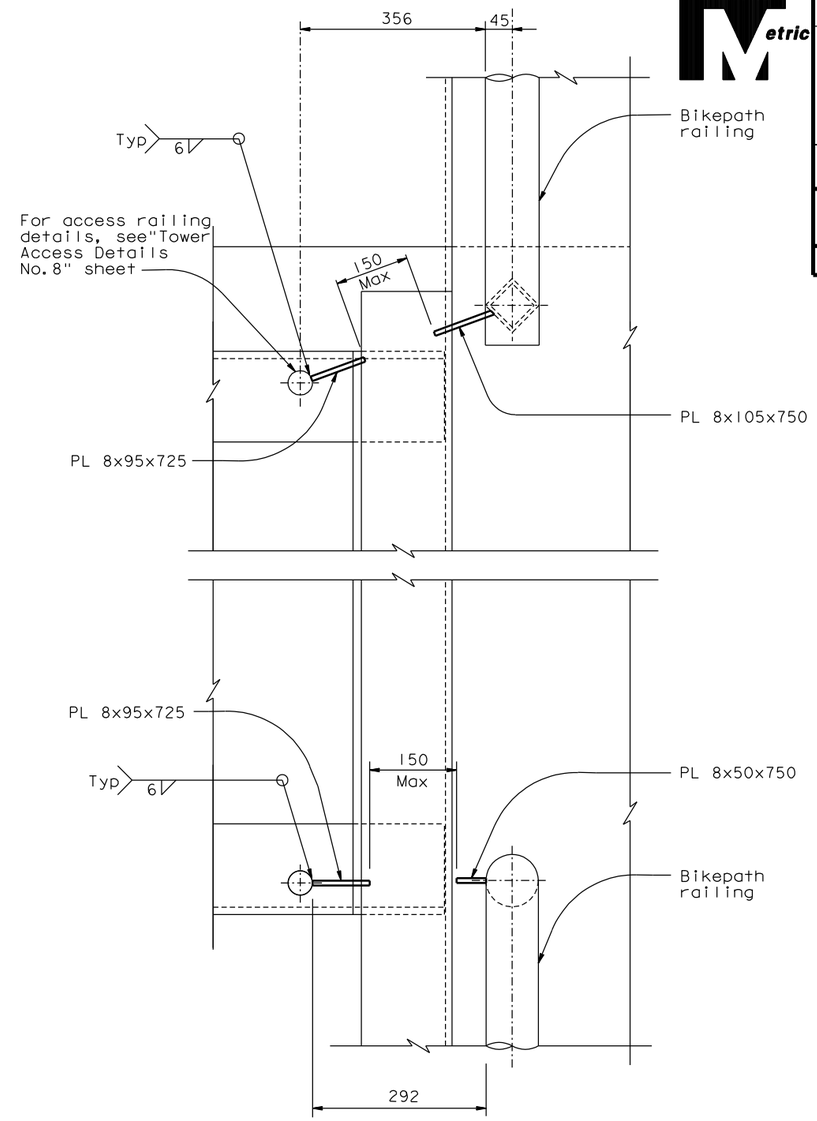

VIEW D-D
1:5

NOTES:

1. For details not shown, see "Railing Layout No. 3" sheet.
2. PL 8 edges shall be ground smooth.

CONTRACT CHANGE ORDER NO. ____
SHEET ___ OF ___

REQUESTS FOR INFORMATION NOT ADDRESSED IN THIS CCO REMAIN IN FORCE

ALL DIMENSIONS ARE IN MILLIMETERS UNLESS OTHERWISE SHOWN

R. Valizadeh/V. Toan/Y.L./W.L./F.C.
DESIGN OVERSIGHT
Reza Valizadeh / Vong Toan / Y. Liu
SIGN OFF DATE 12/30/11

MARK	DATE	DESCRIPTIONS	BY	CH'D	CCO#
0	12/30/11	EMERGENCY ACCESS RAILING MODIFICATIONS	HT	JD	231

REVISIONS

DESIGN	BY H. Tazir	CHECKED J. Duxbury	
DETAILS	BY H. Tazir	CHECKED J. Duxbury	
QUANTITIES	BY H. Tazir	CHECKED J. Duxbury	

PREPARED FOR THE STATE OF CALIFORNIA DEPARTMENT OF TRANSPORTATION

R. Manzanarez
PROJECT ENGINEER

BRIDGE NO. 34-0006L/R
KILOMETER POST 13.2/13.9

SAN FRANCISCO OAKLAND BAY BRIDGE
EAST SPAN SEISMIC SAFETY PROJECT
SELF-ANCHORED SUSPENSION BRIDGE
(SUPERSTRUCTURE & TOWER)

RAILING LAYOUT NO. 3B

Rev. Date: 5-18-98

ORIGINAL SCALE IN MILLIMETERS FOR REDUCED PLANS 0 10 20 30 40 50 60 70 80 90 100

CU 04
EA 0120F1

DISREGARD PRINTS BEARING EARLIER REVISION DATES

REVISION DATES (PRELIMINARY STAGE ONLY) 12/30/11

SHEET 480S2 OF

FILE => I:\bb\04-012001\sas\contract plans and cco\cco\cco*231\1-original 12-30-11\dgn\akrlg03s02.dgn

100% PS&E

USERNAME => arivera DATE PLOTTED => 30 DEC 2011 TIME PLOTTED => 08:40:24