DIST.	COUNTY	ROUTE	KILOMETER POST TOTAL PROJECT	SHEET NO.	TOTAL SHEETS
04	SF	80	13.2/13.9	897S2	1204

REGISTERED ENGINEER - CIVIL

01-27-12

PLANS APPROVAL DATE

REGISTERED PROFESSIONAL ENGINEER James P. Duxbury No. C 64677 Exp. 06/30/13 CIVIL STATE OF CALIFORNIA

The State of California or its officers or agents shall not be responsible for the accuracy or completeness of electronic copies of this plan sheet.

T.Y. LIN / MOFFATT & NICHOL
825 BATTERY STREET
SAN FRANCISCO, CA 94111

Caltrans now has a web site! To get to the web site, go to: http://www.dot.ca.gov

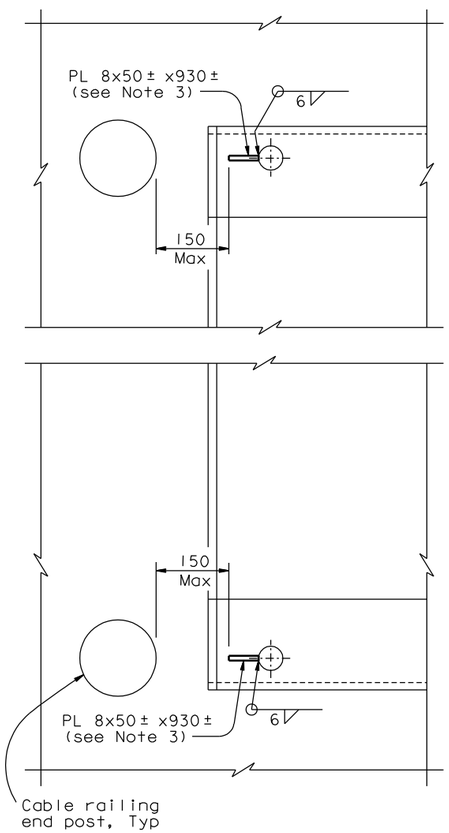

SECTION B-B
1:5

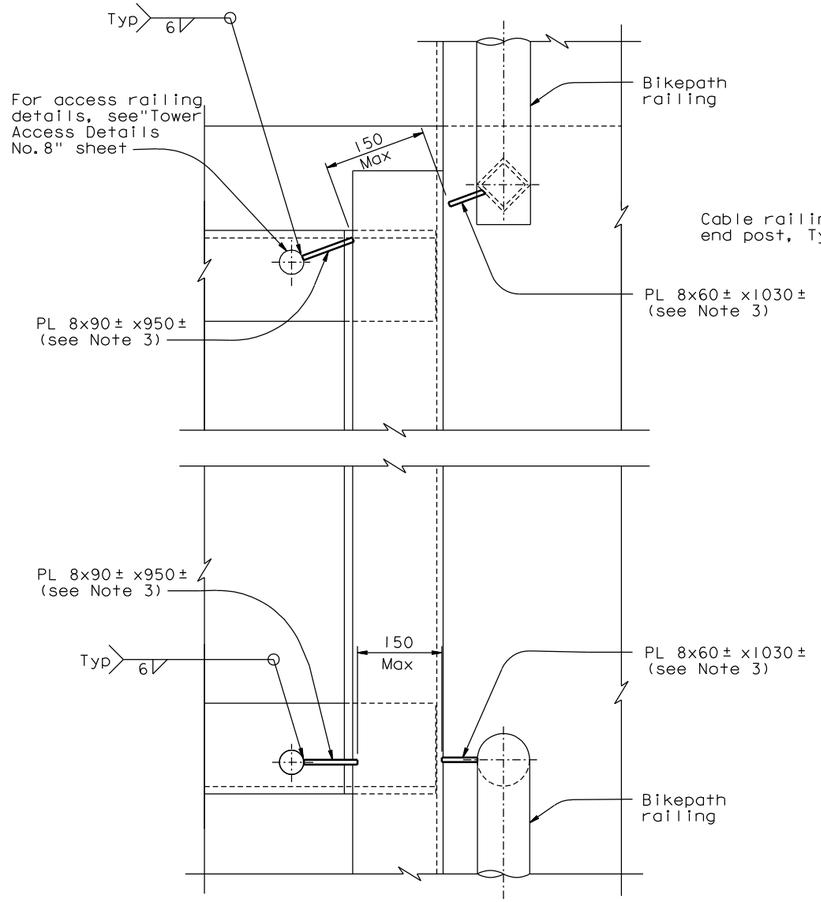

SECTION C-C
1:5

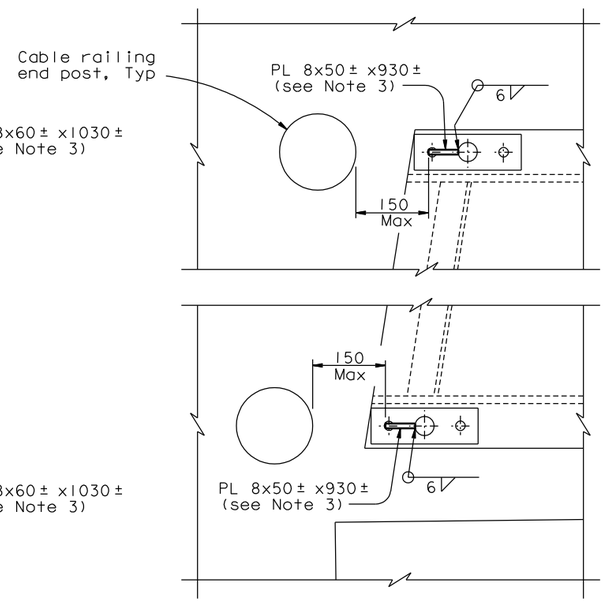

SECTION D-D
1:5

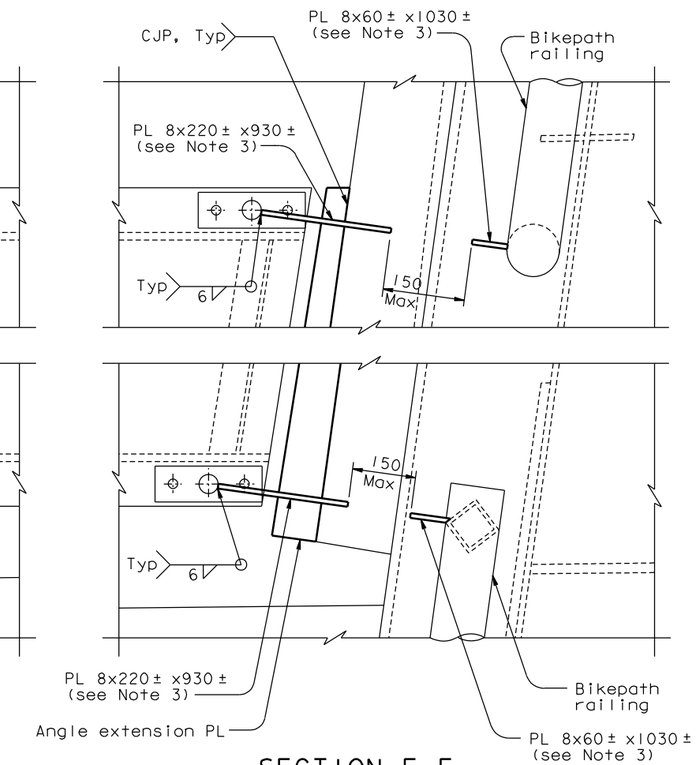

SECTION E-E
1:5

NOTES:

1. For details not shown, see "Railing Layout No. 3" sheet.
2. PL 8 edges shall be ground smooth.
3. Dimensions of PL 8 shall be adjusted to achieve a gap of 150 Max.

CONTRACT CHANGE ORDER NO. _____
SHEET ____ OF ____

REQUESTS FOR INFORMATION NOT ADDRESSED IN THIS CCO REMAIN IN FORCE

ALL DIMENSIONS ARE IN MILLIMETERS UNLESS OTHERWISE SHOWN

R. Valizadeh/V. Toan/Y.L./W.L./F.C.
DESIGN OVERSIGHT
SIGN OFF DATE 01/27/12

MARK	DATE	DESCRIPTIONS	BY	CH'D	CCO#
0	01/27/12	EMERGENCY ACCESS RAILING MODIFICATIONS	HT	JD	231

REVISIONS

DESIGN	BY H. Tazir	CHECKED J. Duxbury	
DETAILS	BY H. Tazir	CHECKED J. Duxbury	
QUANTITIES	BY H. Tazir	CHECKED J. Duxbury	

PREPARED FOR THE STATE OF CALIFORNIA DEPARTMENT OF TRANSPORTATION

R. Manzanarez
PROJECT ENGINEER

BRIDGE NO. 34-0006L/R
KILOMETER POST 13.2/13.9

SAN FRANCISCO OAKLAND BAY BRIDGE
EAST SPAN SEISMIC SAFETY PROJECT
SELF-ANCHORED SUSPENSION BRIDGE
(SUPERSTRUCTURE & TOWER)

RAILING LAYOUT NO. 3B

Rev. Date: 5-18-98

ORIGINAL SCALE IN MILLIMETERS FOR REDUCED PLANS 0 10 20 30 40 50 60 70 80 90 100

CU 04
EA 0120F1

DISREGARD PRINTS BEARING EARLIER REVISION DATES 01/27/12

REVISION DATES (PRELIMINARY STAGE ONLY)

SHEET 480S2 OF

FILE => I:\bb\04-012001\sas\contract plans and cco\cco\cco#231\2-update 01-27-12\dgn\akrlg03s02.dgn

100 % PS&E

USERNAME => DWinrow DATE PLOTTED => 27 JAN 2012 TIME PLOTTED => 15:40:41