DIST.	COUNTY	ROUTE	KILOMETER POST TOTAL PROJECT	SHEET NO.	TOTAL SHEETS
04	SF	80	13.2/13.9	897R5	1204

REGISTERED ENGINEER - CIVIL

12-6-04
PLANS APPROVAL DATE

REGISTERED PROFESSIONAL ENGINEER Tien Hung Ho No. C 43990 Exp. 6/30/13 CIVIL STATE OF CALIFORNIA

The State of California or its officers or agents shall not be responsible for the accuracy or completeness of electronic copies of this plan sheet.

T.Y. LIN / MOFFATT & NICHOL
825 BATTERY STREET
SAN FRANCISCO, CA 94111

Caltrans now has a web site! To get to the web site, go to: http://www.dot.ca.gov

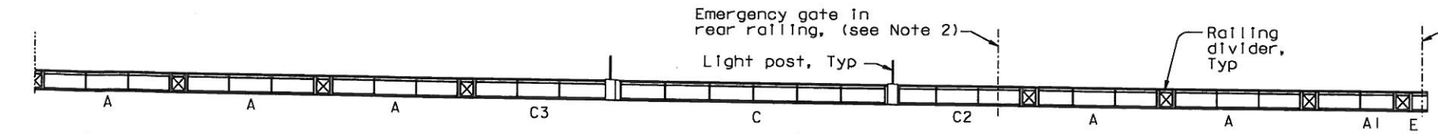

REAR ELEVATION
1:200

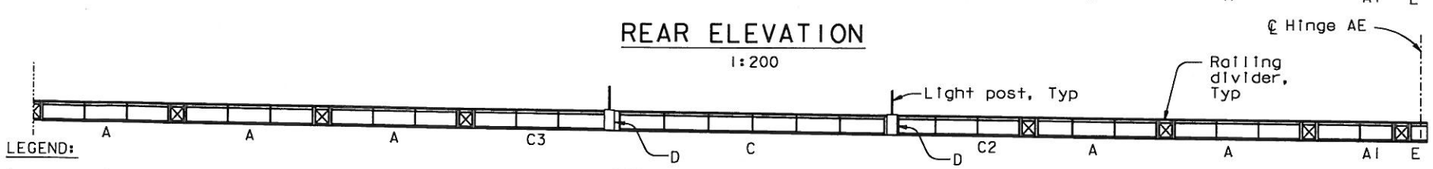

FRONT ELEVATION
1:200

LEGEND:
A Indicates Railing Panel Type Number
(51) Indicates Panel Point

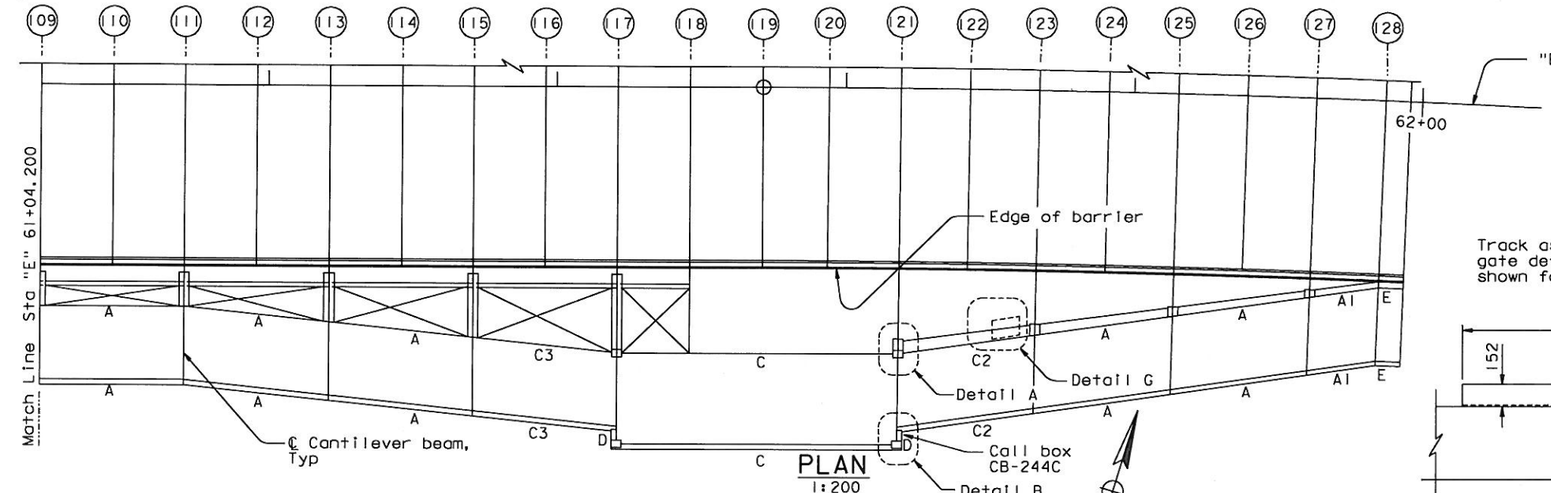

PLAN
1:200

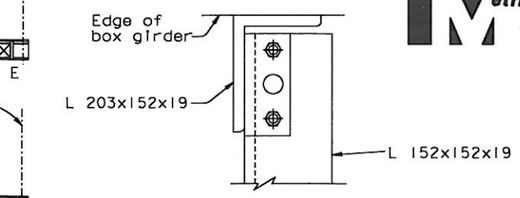

DETAIL F
1:5
(Grating not shown for clarity)
(Detail F shown Detail E similar)

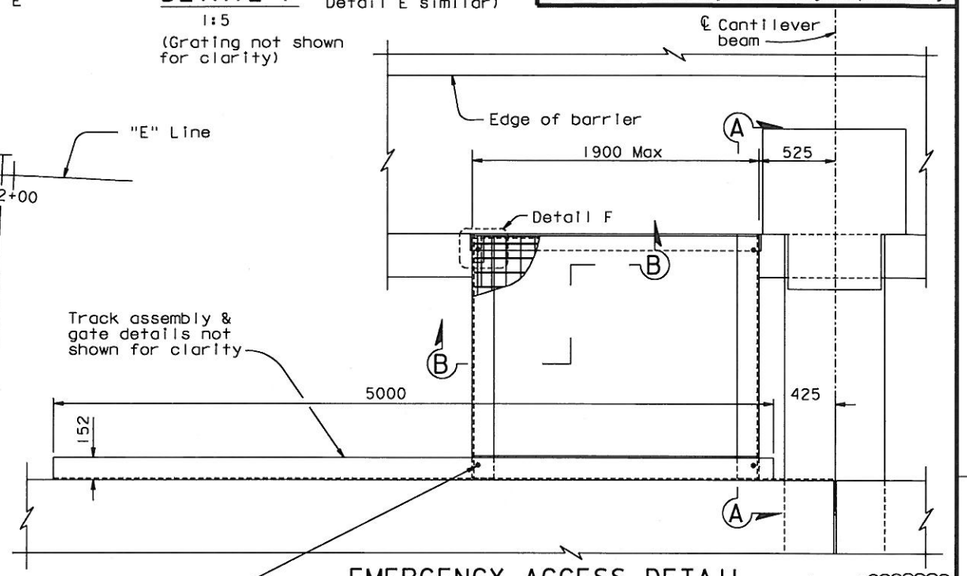

EMERGENCY ACCESS DETAIL
1:20

NOTES:

1. For railing panel Type A through Type E, see "Railing Details No. 1" sheet.
2. For emergency gate details and details not shown on Detail D, see "Railing Details No. 5" sheet.
3. For Detail A and Detail B, see "Railing Details No. 4" sheet.
4. For call box location and details, see "Road Plans".
5. For Details G, H and J, see "Railing Layout No. 3A" sheet. (5)

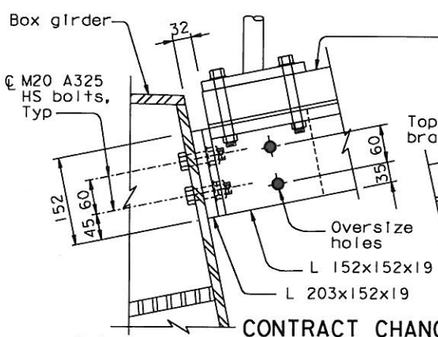

DETAIL C
1:5
(Grating not shown for clarity)

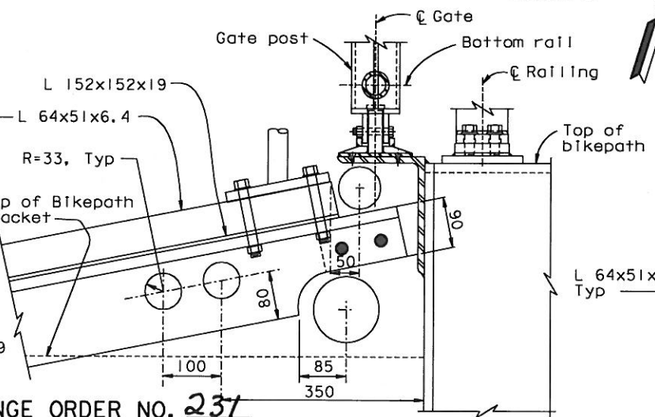

DETAIL D
1:5
(Grating not shown for clarity)
(See Note 2)

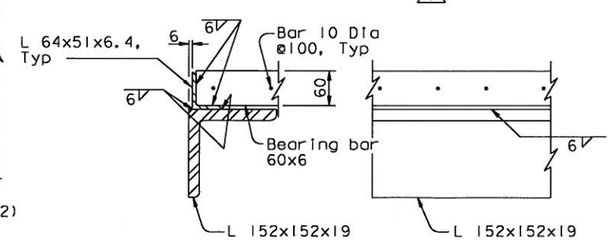

SECTION B-B
1:5

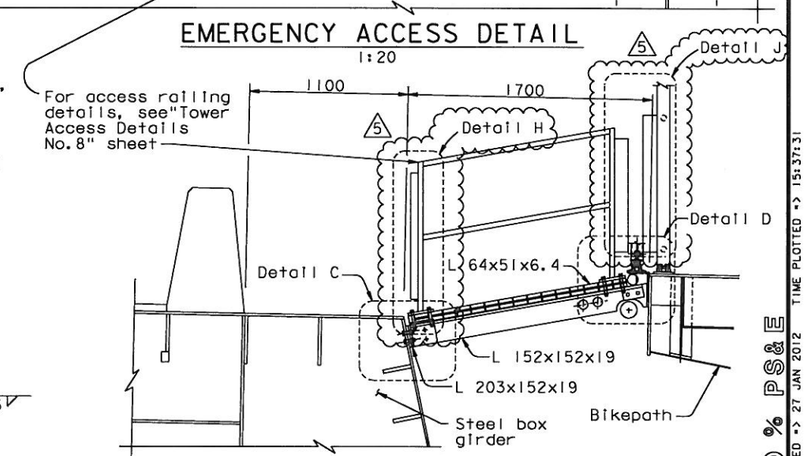

SECTION A-A
1:20

CONTRACT CHANGE ORDER NO. 231
SHEET 2 OF 4

REQUESTS FOR INFORMATION NOT ADDRESSED IN THIS CCO REMAIN IN FORCE

MARK	DATE	DESCRIPTIONS	BY	CH'D	CCO#
5	01/27/12	EMERGENCY ACCESS RAILING MODIFICATIONS	HT	TH	231
4	11/12/10	BIKEPATH HANDRAIL MODIFICATIONS	TH	JD	169
3	08/20/10	BIKEPATH DETAILS	TH	MN	99
2	11/26/08	BIKEPATH DETAILS	TH	MN	99
1	09/07/07	MECHANICAL MODIFICATIONS	JD	TH	31

REVISIONS

R. Valizadeh/V. Toan/Y.L./W.L./F.C.
DESIGN OVERSIGHT
SIGN OFF DATE 01/27/12

Rev. Date: 5-18-98

	BY	CHECKED
DESIGN	T. Ho	C. Redfield
DETAILS	R. Xu	C. Redfield
QUANTITIES	G. Baker	K. Cormier

PREPARED FOR THE STATE OF CALIFORNIA DEPARTMENT OF TRANSPORTATION

R. Manzanarez
PROJECT ENGINEER

ALL DIMENSIONS ARE IN MILLIMETERS UNLESS OTHERWISE SHOWN

ORIGINAL SCALE IN MILLIMETERS FOR REDUCED PLANS 0 10 20 30 40 50 60 70 80 90 100

CU 04
EA 0120F1

BRIDGE NO. 34-0006L/R
KILOMETER POST 13.2/13.9

DISREGARD PRINTS BEARING EARLIER REVISION DATES

REVISION DATES (PRELIMINARY STAGE ONLY) 05/13/99 08/26/99 05/24/01 01/08/02 07/01/02 12/19/02

SHEET 480R5 OF

SAN FRANCISCO OAKLAND BAY BRIDGE
EAST SPAN SEISMIC SAFETY PROJECT
SELF-ANCHORED SUSPENSION BRIDGE
(SUPERSTRUCTURE & TOWER)

RAILING LAYOUT NO. 3

100 % PS&E

DATE PLOTTED => 27 JAN 2012 TIME PLOTTED => 15:37:31

USERNAME => DWinrow

FILE => I:\bb\04-012001\sas\contract plans and cco\cco\cco#231\2-update 01-27-12\dgn\akrlg03.dgn

DIST.	COUNTY	ROUTE	KILOMETER POST TOTAL PROJECT	SHEET NO.	TOTAL SHEETS
04	SF	80	13.2/13.9	897SIR1	1204

REGISTERED ENGINEER - CIVIL

11-26-08
PLANS APPROVAL DATE

REGISTERED PROFESSIONAL ENGINEER Tien Hung Ho No. C 43990 Exp. 6/03/13 CIVIL STATE OF CALIFORNIA

The State of California or its officers or agents shall not be responsible for the accuracy or completeness of electronic copies of this plan sheet.

T.Y. LIN / MOFFATT & NICHOL
825 BATTERY STREET
SAN FRANCISCO, CA 94111

Caltrans now has a web site! To get to the web site, go to: http://www.dot.ca.gov

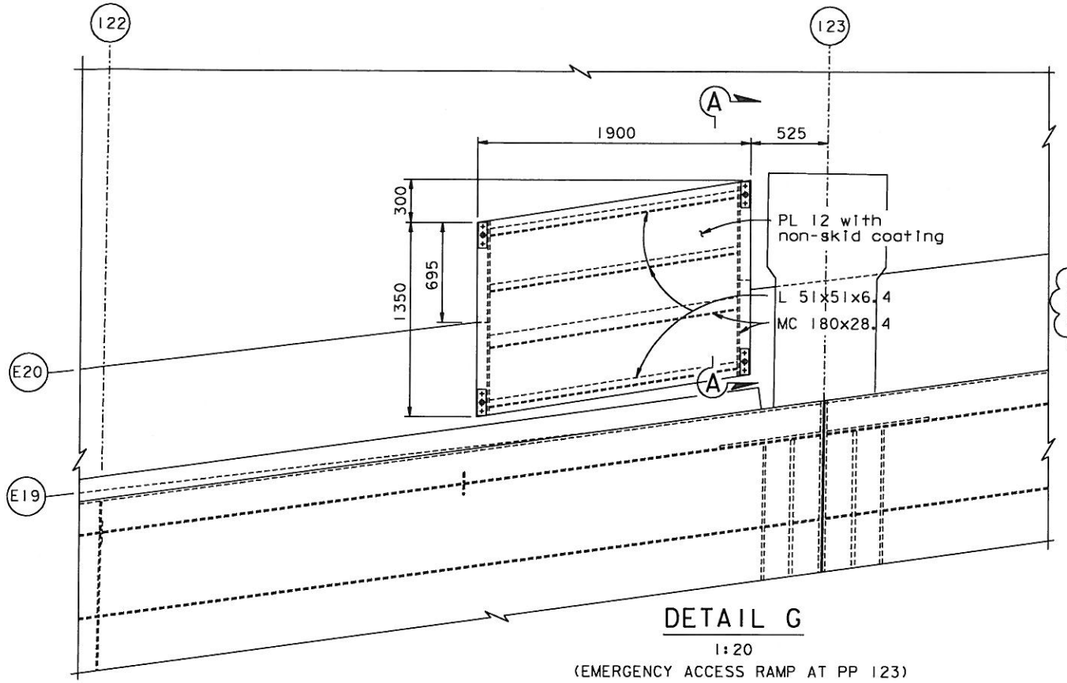

DETAIL G
1:20
(EMERGENCY ACCESS RAMP AT PP 123)

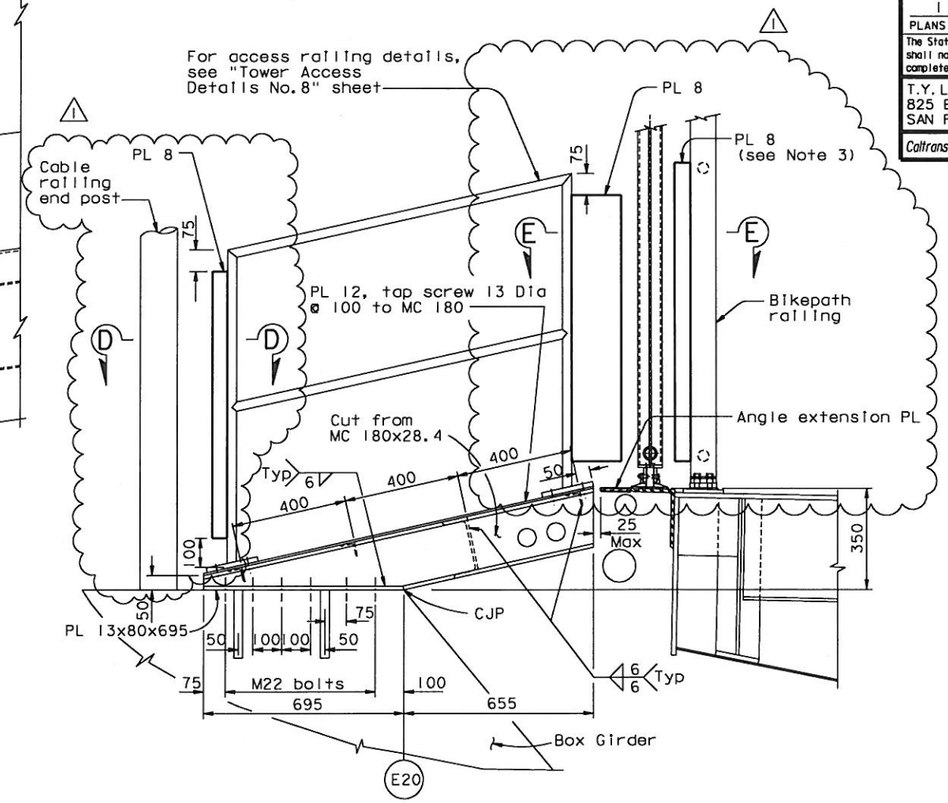

SECTION A-A
1:10

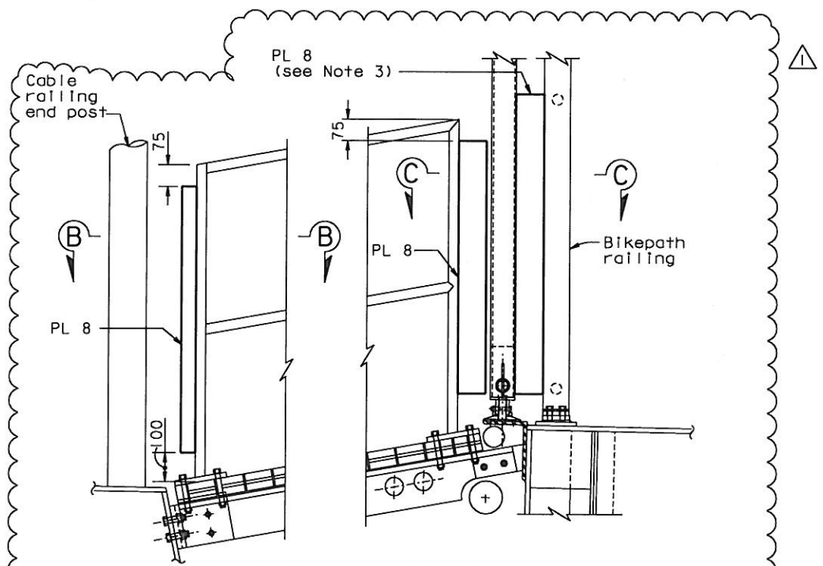

DETAIL H
1:10

DETAIL J
1:10
(At PP 15, 47 & 79)

NOTES:

1. For details not shown, see "Railing Layout No. 3" sheet.
2. For Sections B-B, C-C, D-D and E-E, see "Railing Layout No. 3B" sheet.
3. The top of PL 8 on bikepath railing post shall align with the top of upper 38 Dia pipe. The bottom of PL 8 on bikepath railing post shall align with the bottom of lower 38 Dia pipe.
4. Finish paint all PL 8 and angle extension PL.

CONTRACT CHANGE ORDER NO. 231
SHEET 3 OF 4

REQUESTS FOR INFORMATION NOT ADDRESSED IN THIS CCO REMAIN IN FORCE

ALL DIMENSIONS ARE IN MILLIMETERS UNLESS OTHERWISE SHOWN

MARK	DATE	DESCRIPTIONS	BY	CH'D	CCO#
1	01/27/12	EMERGENCY ACCESS RAILING MODIFICATIONS	HT	TH	231
0	11/26/08	BIKEPATH DETAILS	TH	MN	99

REVISIONS

R. Vallizadeh/V. Toan/Y.L./W.L./F.C.
DESIGN OVERSIGHT
SIGN OFF DATE 01/27/12

DESIGN BY T. Ho CHECKED M. Nader
DETAILS BY T. Ho CHECKED M. Nader
QUANTITIES BY T. Ho CHECKED M. Nader

PREPARED FOR THE STATE OF CALIFORNIA DEPARTMENT OF TRANSPORTATION

R. Manzanarez
PROJECT ENGINEER

BRIDGE NO. 34-0006L/R
KILOMETER POST 13.2/13.9

SAN FRANCISCO OAKLAND BAY BRIDGE
EAST SPAN SEISMIC SAFETY PROJECT
SELF-ANCHORED SUSPENSION BRIDGE
(SUPERSTRUCTURE & TOWER)

RAILING LAYOUT NO. 3A

Rev. Date: 5-18-98

ORIGINAL SCALE IN MILLIMETERS FOR REDUCED PLANS 0 10 20 30 40 50 60 70 80 90 100

CU 04
EA 0120F1

DISREGARD PRINTS BEARING EARLIER REVISION DATES 11/26/08

REVISION DATES (PRELIMINARY STAGE ONLY)

SHEET 480SIR1 OF

FILE => I:\bb\04-012001\sas\contract plans and cco\cco\cco#231\2-update 01-27-12\dgn\akrlg03s01.dgn

100% PS&E

USERNAME => DWinrow DATE PLOTTED => 27 JAN 2012 TIME PLOTTED => 15:38:32

DIST.	COUNTY	ROUTE	KILOMETER POST TOTAL PROJECT	SHEET NO.	TOTAL SHEETS
04	SF	80	13.2/13.9	897S2	1204

REGISTERED ENGINEER - CIVIL

01-27-12

PLANS APPROVAL DATE

REGISTERED PROFESSIONAL ENGINEER James P. Duxbury No. C 64677 Exp. 06/30/13 CIVIL STATE OF CALIFORNIA

The State of California or its officers or agents shall not be responsible for the accuracy or completeness of electronic copies of this plan sheet.

T.Y. LIN / MOFFATT & NICHOL
825 BATTERY STREET
SAN FRANCISCO, CA 94111

Caltrans now has a web site! To get to the web site, go to: http://www.dot.ca.gov

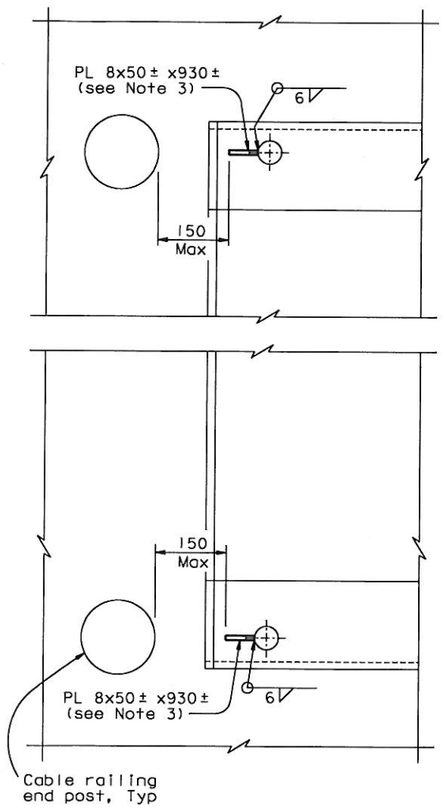

SECTION B-B
1:5

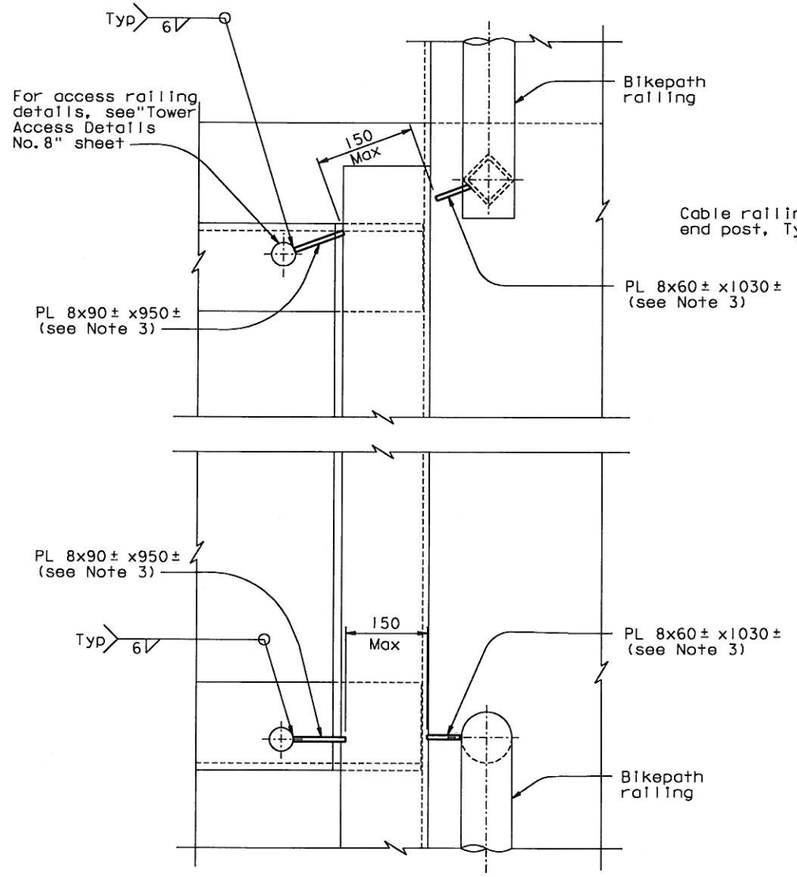

SECTION C-C
1:5

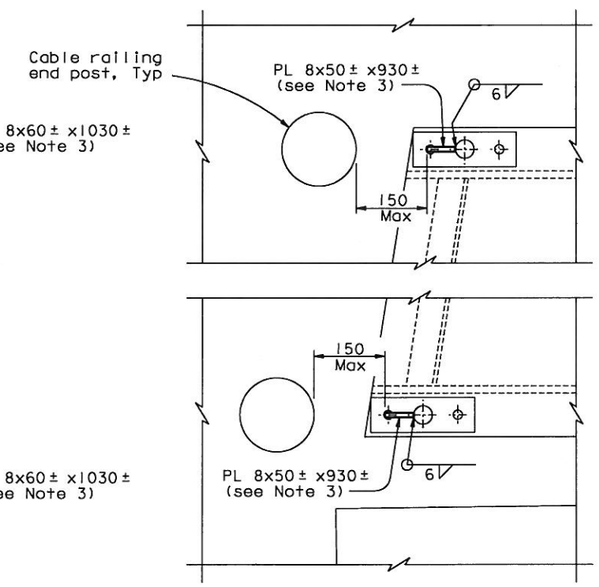

SECTION D-D
1:5

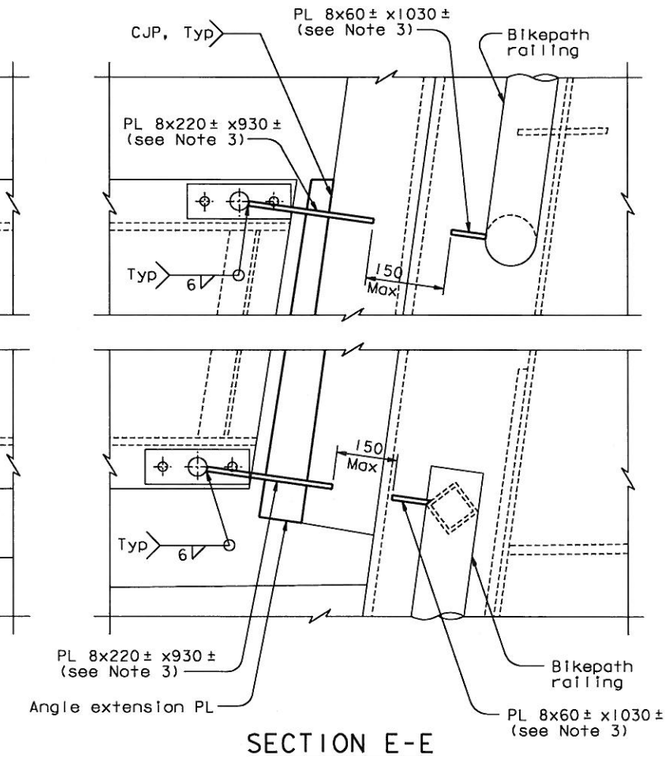

SECTION E-E
1:5

NOTES:

1. For details not shown, see "Railing Layout No. 3" sheet.
2. PL 8 edges shall be ground smooth.
3. Dimensions of PL 8 shall be adjusted to achieve a gap of 150 Max.

CONTRACT CHANGE ORDER NO. 231
SHEET 4 OF 4

REQUESTS FOR INFORMATION NOT ADDRESSED IN THIS CCO REMAIN IN FORCE

ALL DIMENSIONS ARE IN MILLIMETERS UNLESS OTHERWISE SHOWN

R. Valizadeh/V. Toan/Y.L./W.L./F.C.
DESIGN OVERSIGHT
SIGN OFF DATE 01/27/12

MARK	DATE	DESCRIPTIONS	BY	CH'D	CCO#
0	01/27/12	EMERGENCY ACCESS RAILING MODIFICATIONS	HT	JD	231

REVISIONS

DESIGN	BY H. Tazlr	CHECKED J. Duxbury	
DETAILS	BY H. Tazlr	CHECKED J. Duxbury	
QUANTITIES	BY H. Tazlr	CHECKED J. Duxbury	

PREPARED FOR THE STATE OF CALIFORNIA DEPARTMENT OF TRANSPORTATION

R. Manzanarez
PROJECT ENGINEER

BRIDGE NO. 34-0006L/R
KILOMETER POST 13.2/13.9

SAN FRANCISCO OAKLAND BAY BRIDGE
EAST SPAN SEISMIC SAFETY PROJECT
SELF-ANCHORED SUSPENSION BRIDGE
(SUPERSTRUCTURE & TOWER)

RAILING LAYOUT NO. 3B

Rev. Date: 5-18-98

ORIGINAL SCALE IN MILLIMETERS FOR REDUCED PLANS 0 10 20 30 40 50 60 70 80 90 100

CU 04
EA 0120F1

DISREGARD PRINTS BEARING EARLIER REVISION DATES 01/27/12

REVISION DATES (PRELIMINARY STAGE ONLY)

SHEET 480S2 OF

FILE => I:\bb\04-012001\sas\contract plans and cco\cco\cco#231\2-update 01-27-12\dgn\akrlg03s02.dgn

100 % PS&E

USERNAME => DWinrow DATE PLOTTED => 27 JAN 2012 TIME PLOTTED => 15:40:41