DIST	COUNTY	ROUTE	KILOMETER POST TOTAL PROJECT	SHEET No	TOTAL SHEETS
04	SF	80	13.2/13.9	55R4	1204

REGISTERED MECHANICAL ENGINEER — DATE 11/25/2009

PLANS APPROVAL DATE

REGISTERED PROFESSIONAL ENGINEER — Bobby J. Melvin No. 28685 Exp. 6/30/11 MECHANICAL — STATE OF CALIFORNIA

PARSONS BRINCKERHOFF QUADE & DOUGLAS, INC.
303 SECOND STREET, SUITE 700 N
SAN FRANCISCO, CA 94107

The State of California or its officers or agents shall not be responsible for the accuracy or completeness of electronic copies of this plan sheet.

To get to the web site, go to http://www.dot.ca.gov

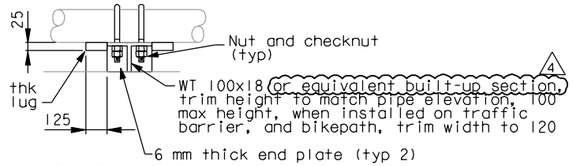

SECTION A-A

Table for PS-8

Pipe	"A"	"B"	"C"
6 NPS Reclaim Water	W250x49x250 long	3	16 mm, ASTM A325
10 NPS Sewer	W250x73x355 long	1	19 mm, ASTM A325
12 NPS Water	W250x73x355 long	1	19 mm, ASTM A325

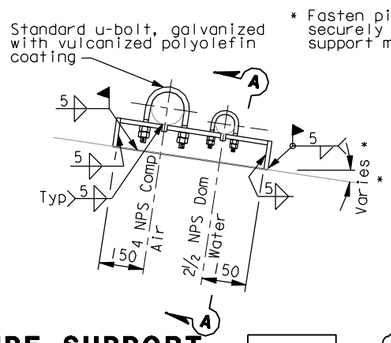

PIPE SUPPORT DETAIL (typ) — PS-7

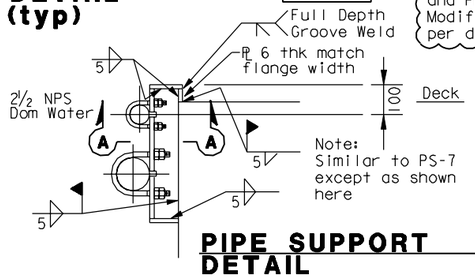

PIPE SUPPORT DETAIL (Attachment to Bikepath) — PS-7

For Bikepath pipe support near PP-28 and PP-68 use Modified PS-7 per detail 5 on M-17

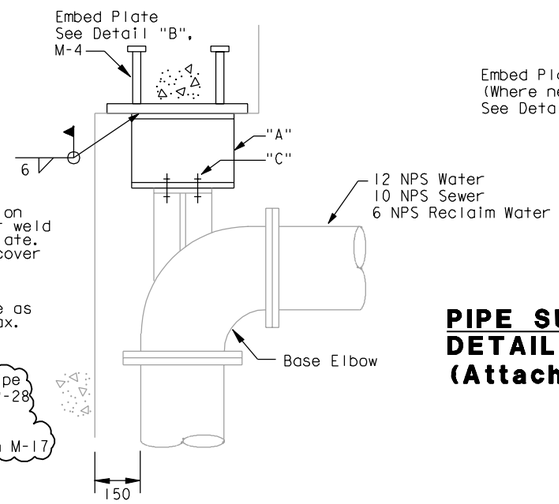

PIPE SUPPORT DETAIL — PS-8

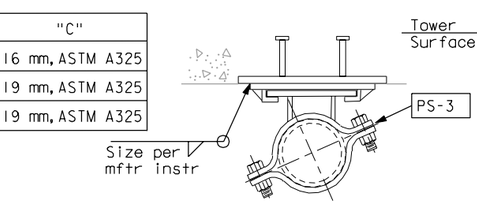

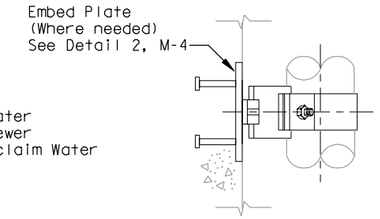

PIPE SUPPORT DETAIL (Attachment to Concrete) — PS-9

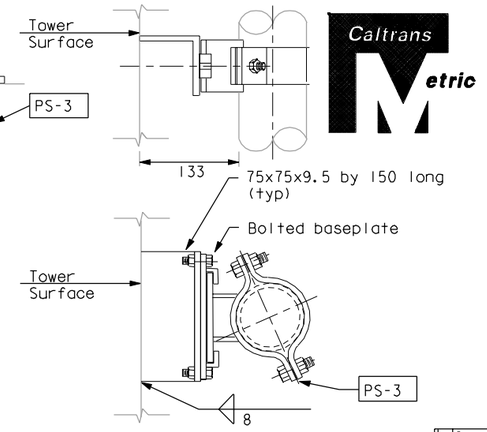

PIPE SUPPORT DETAIL (Attachment to Tower) — PS-9

Table for PS-3 to use with PS-9

Pipe	Vert. Load (kg)	Lat. Load (kg)	Axial Move (mm)
2 NPS	-	30	38
2½ NPS	-	30	38
3 NPS	-	40	38
4 NPS	-	60	38

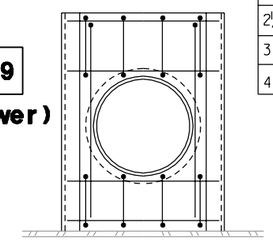

SECTION D-D

East Bound

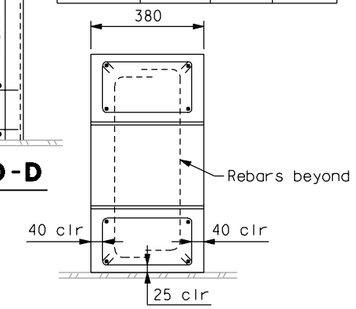

SECTION E-E

Thrust Collar for PS-12

Pipe	Axial Load Rating (kg)
6 NPS	6,000
10 NPS	13,000
12 NPS	18,000

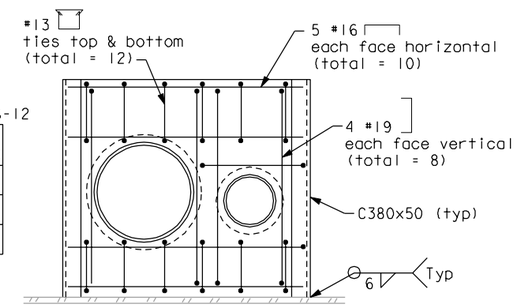

SECTION D-D

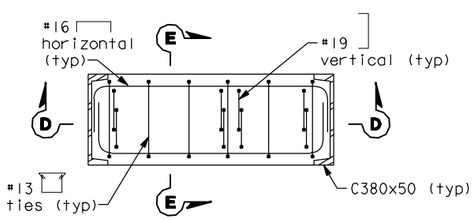

PLAN NEAR TOP

Table for PS-11

Pipe	"A"	"B"	"C"
6 NPS Reclaim Water	W150X30	4	13
10 NPS Sewer	W200X46	4	13
12 NPS Water	W200X46	4	13

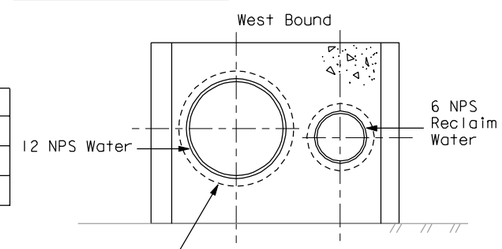

West Bound

PIPE SUPPORT DETAIL — PS-12

Table for PS-10

PIPE	"A"	"B"	"C"	"D"
6 NPS Reclaim Water	W200X36	4	6	19 mm BOLT - ASTM A325
10 NPS Sewer	W200X46	3	6	19 mm BOLT - ASTM A325
12 NPS Water	W200X46	3	6	19 mm BOLT - ASTM A325

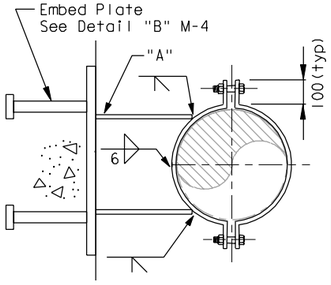

SECTION C-C

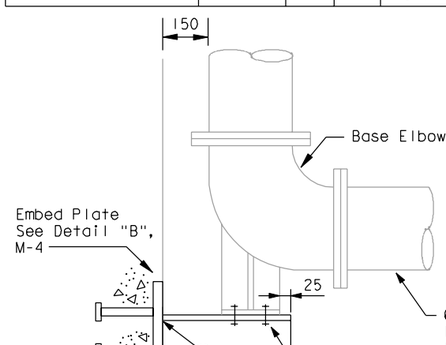

PIPE SUPPORT DETAIL — PS-10

REGISTERED PROFESSIONAL ENGINEER — Bobby J. Melvin No. 28685 MECHANICAL — STATE OF CALIFORNIA

Bobby J. Melvin
FOR REVISION ONLY
1 2 3 4

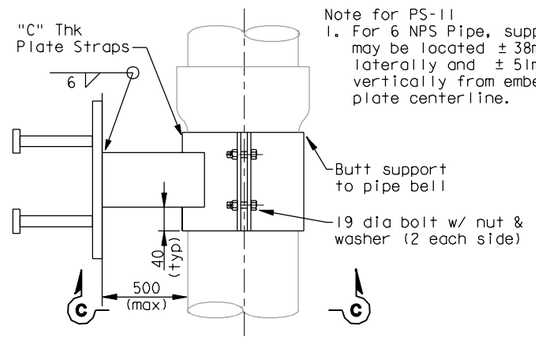

Note for PS-11
1. For 6 NPS Pipe, support may be located ± 38mm laterally and ± 51mm vertically from embed plate centerline.

PIPE SUPPORT DETAIL — PS-11

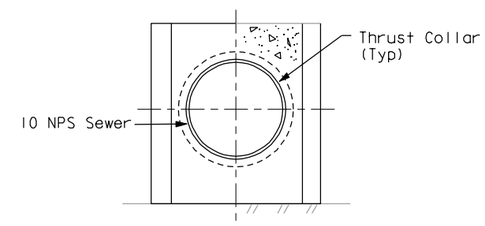

East Bound

REQUEST FOR INFORMATION NOT ADDRESSED IN THIS CCO REMAIN IN FORCE					
4	2/17/12	BIKE PATH PIPE SUPPORT	MM	BM	229
3	4/22/09	MISCELLANEOUS MECHANICAL	CM	BM	83
2	1/18/08	MECHANICAL MODIFICATIONS	VY	BM	31
1	9/05/07	MECHANICAL MODIFICATIONS	BM	RM	31
MARK	DATE	DESCRIPTIONS	BY	CH'D	CCO#
		REVISIONS			

CONTRACT CHANGE ORDER NO. _____
SHEET _____ OF _____

MECHANICAL PIPE SUPPORT DETAILS No. 2

NO SCALE

M-19

ALL DIMENSIONS IN MILLIMETERS UNLESS OTHERWISE SHOWN

DATE	BM	CALCULATED/ DESIGNED BY	REVISED BY
10/31/02	KH	CHECKED BY	DATE REVISED

PROJECT ENGINEER: Rich Newell

STATE OF CALIFORNIA - DEPARTMENT OF TRANSPORTATION — Caltrans

FOR REDUCED PLANS ORIGINAL SCALE IS IN MILLIMETERS: 0 20 40 60 80

USERNAME => macnivenmc
DGN FILE => J:\13103k - SF08B\RFI-Construction Support\CCO\CCO 229\04-0120F1_0055R04.dgn

CU 04251 | EA 0120F1

LAST REVISION 00-00-00 | DATE PLOTTED => 2/17/2012 | TIME PLOTTED => 1:33:04 PM