DIST	COUNTY	ROUTE	KILOMETER POST TOTAL PROJECT	SHEET No	TOTAL SHEETS
04	SF	80	13.2/13.9	53R4	1204

REGISTERED MECHANICAL ENGINEER — DATE 12/19/2002

12/06/2004
PLANS APPROVAL DATE

REGISTERED PROFESSIONAL ENGINEER — Bobby J. Melvin — No. 28685 — Exp. 6/30/09 — MECHANICAL — STATE OF CALIFORNIA

PARSONS BRINCKERHOFF QUADE & DOUGLAS, INC.
303 SECOND STREET, SUITE 700 N
SAN FRANCISCO, CA 94107

The State of California or its officers or agents shall not be responsible for the accuracy or completeness of electronic copies of this plan sheet.

To get to the web site, go to http://www.dot.ca.gov

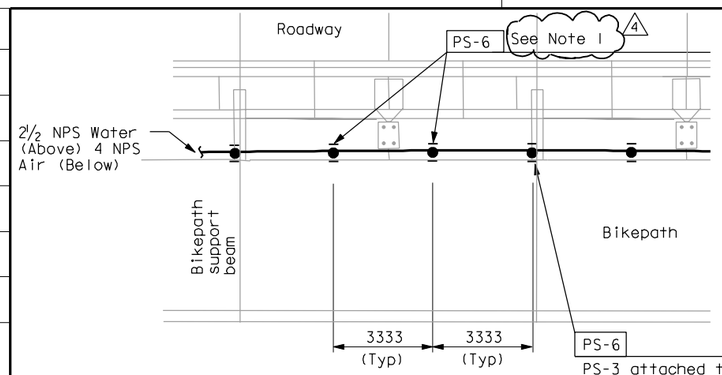

PS-3 attached to bike path support beam. PS6 attached to bike path deck, offset 153mm where necessary to avoid deck joint.

PIPE SUPPORT LAYOUT

DETAIL 1 M-5 thru 10

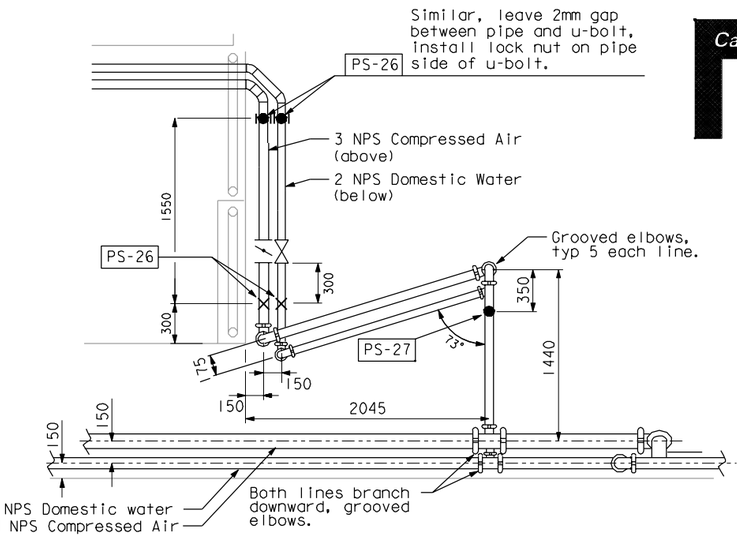

DETAIL 2 M-16

NOTES:

1. At locations where 4 NPS CA pipe installation per Detail PS-6 interferes with OBG suspender cable brackets, alternate pipe support, PS-6 ALT as shown in Detail 4 this drawing shall be used. Clearance between OBG suspender cable bracket and 4 NPS CA pipe shall be 19mm minimum at all locations.
2. Welds at the interface where 4" CA pipe is attached to plate 15 shall be ground smooth.
3. Paint finish shall be repaired per the procedure outlined in project special provisions.

4

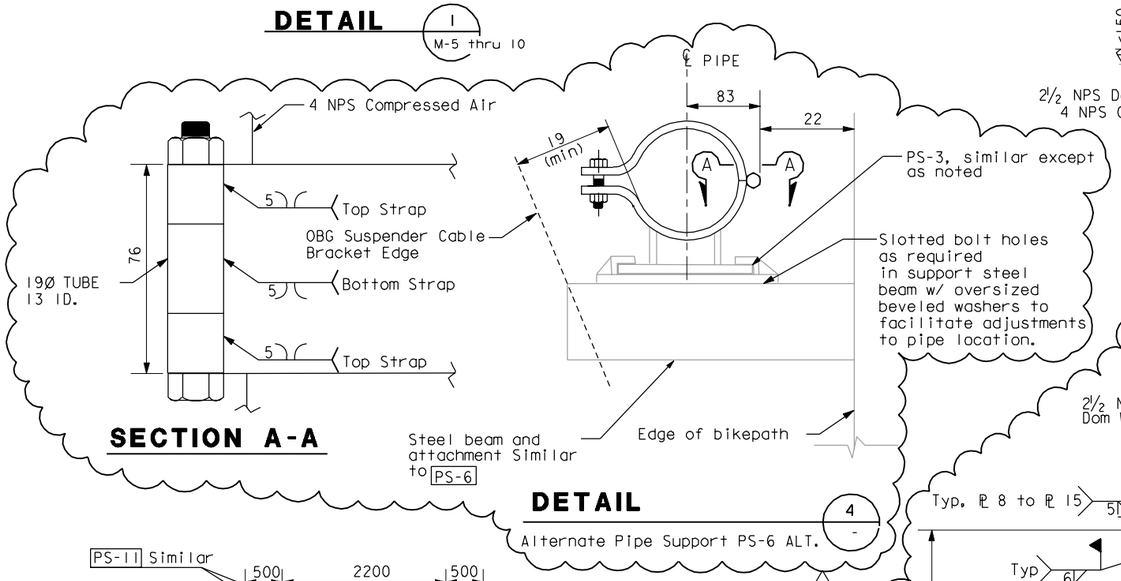

DETAIL 4 Alternate Pipe Support PS-6 ALT.

4

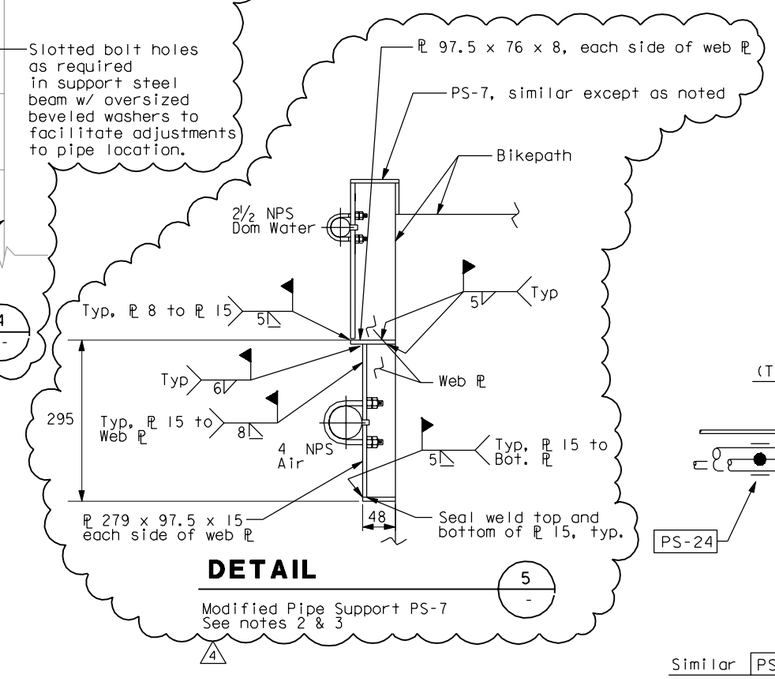

DETAIL 5 Modified Pipe Support PS-7 See notes 2 & 3

4

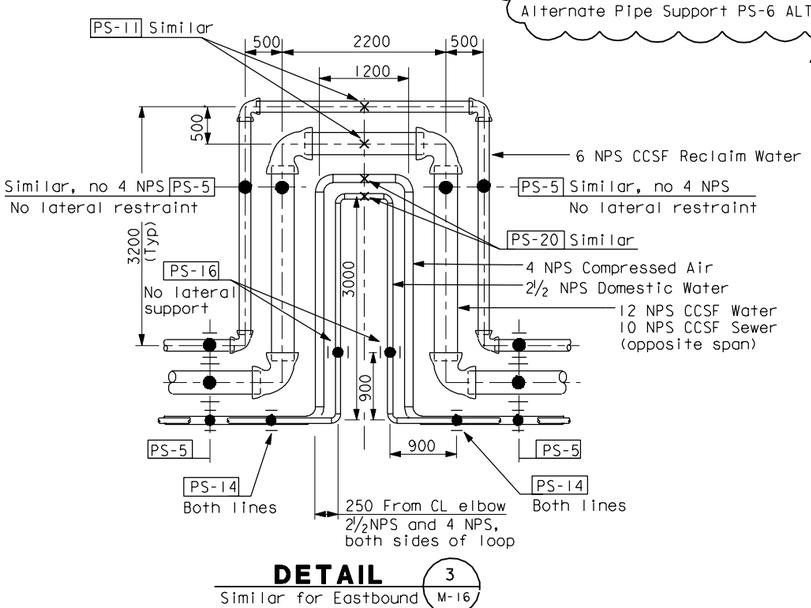

DETAIL 3 Similar for Eastbound except mirrored — M-16

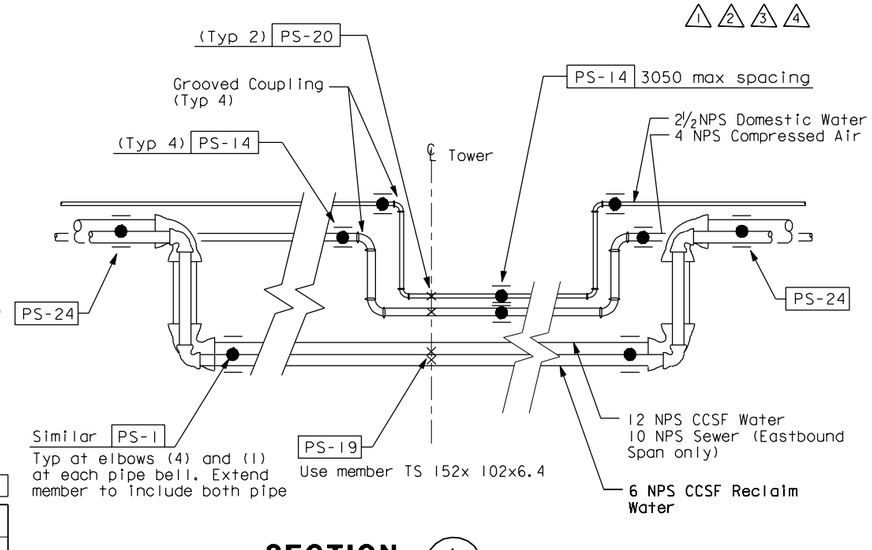

SECTION A Pipe Support layout similar for Eastbound Span — M-16

REGISTERED PROFESSIONAL ENGINEER — Bobby J. Melvin — No. 28685 — MECHANICAL — STATE OF CALIFORNIA

FOR REVISION ONLY
1 2 3 4

MARK	DATE	DESCRIPTIONS	BY	CH'D	CCO#
4	2/17/12	BIKEPATH PIPE SUPPORT	MM	BM	229
3	4/7/08	MECHANICAL MODIFICATIONS	VY	BM	31
2	1/18/08	MECHANICAL MODIFICATIONS	VY	BM	31
1	9/05/07	MECHANICAL MODIFICATIONS	BM	RM	31

REQUEST FOR INFORMATION NOT ADDRESSED IN THIS CCO REMAIN IN FORCE

REVISIONS

CONTRACT CHANGE ORDER NO. _____
SHEET _____ OF _____

MECHANICAL PIPING SECTIONS & DETAILS NO.7

NO SCALE

M-17

REVISED BY	DATE REVISED
BM	10/31/02
KH	11/15/02

CALCULATED/DESIGNED BY — CHECKED BY

PROJECT ENGINEER: Rich Newell

STATE OF CALIFORNIA - DEPARTMENT OF TRANSPORTATION — Caltrans

LAST REVISION 00-00-00 — DATE PLOTTED => 2/17/2012 — TIME PLOTTED => 1:32:09 PM

FOR REDUCED PLANS ORIGINAL SCALE IS IN MILLIMETERS — 0 20 40 60 80

USERNAME => macnivenmc
DGN FILE => J:\13103k - SFOBB\RFI-Construction Support\CCO\CCO 229\04-0120F1_0053R04.dgn

CU 04251 — EA 0120F1