| DIST. | COUNTY | ROUTE | KILOMETER POST TOTAL PROJECT | SHEET NO. | TOTAL SHEETS |
|---|---|---|---|---|---|
| 04 | SF | 80 | 13.2/13.9 | 890S6 | 1204 |

Caltrans Metric

Daniel J. Turner
REGISTERED ENGINEER - CIVIL

12-08-11
PLANS APPROVAL DATE

REGISTERED PROFESSIONAL ENGINEER Daniel J. Turner No. C 65033 Exp. 06/30/13 CIVIL STATE OF CALIFORNIA

*The State of California or its officers or agents shall not be responsible for the accuracy or completeness of electronic copies of this plan sheet.*

T.Y. LIN / MOFFATT & NICHOL
825 BATTERY STREET
SAN FRANCISCO, CA 94111

*Caltrans now has a web site! To get to the web site, go to: http://www.dot.ca.gov*

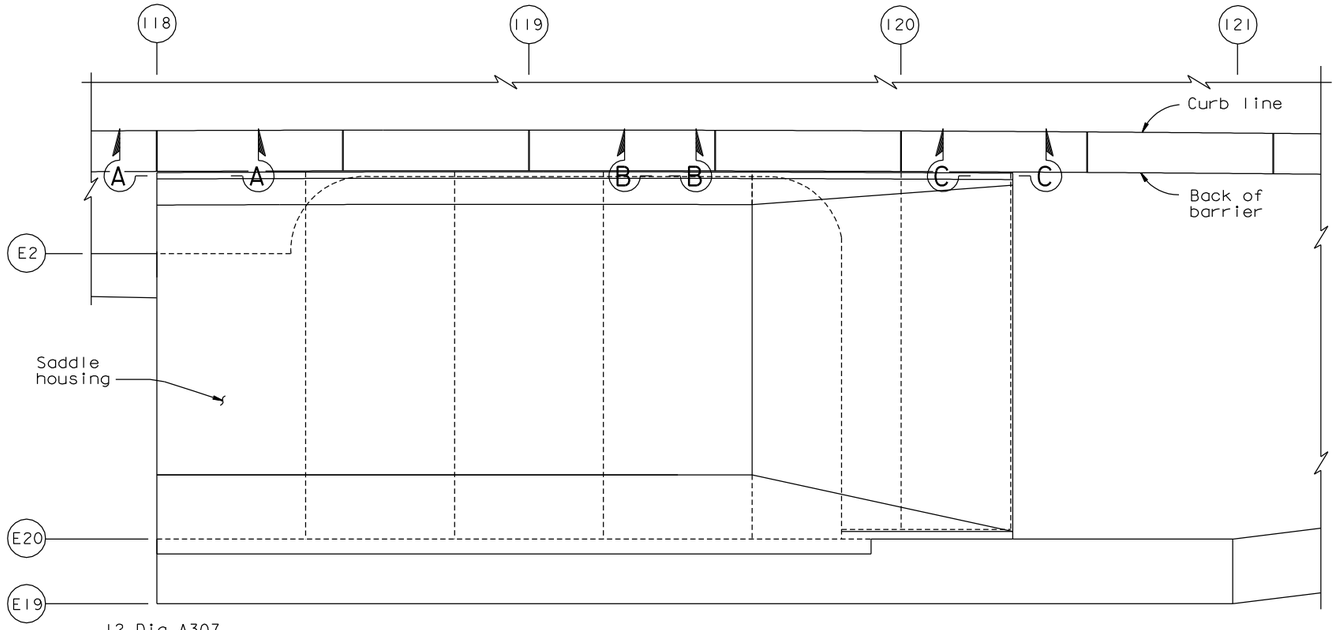


## EAST SADDLE HOUSING PLAN, E-LINE (See Notes 3 & 5)

1:40

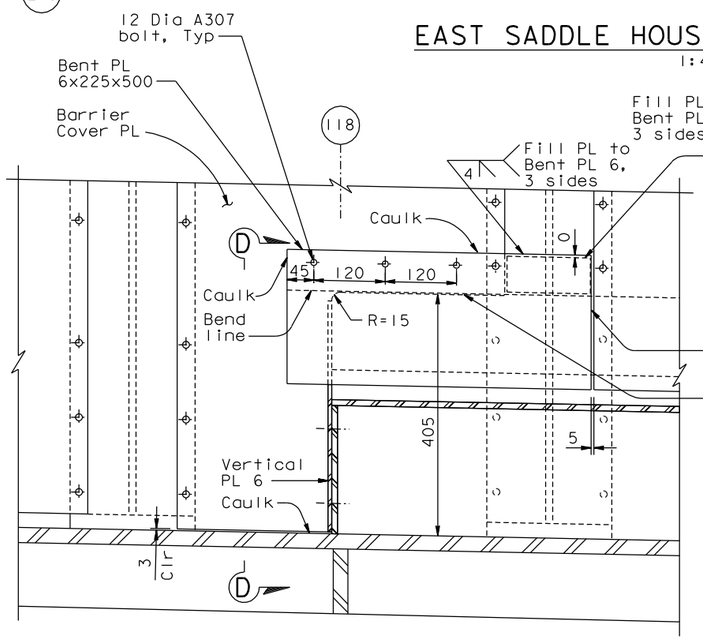


## SECTION A-A (Barrier interior details at PP 118 not shown for clarity)

1:5

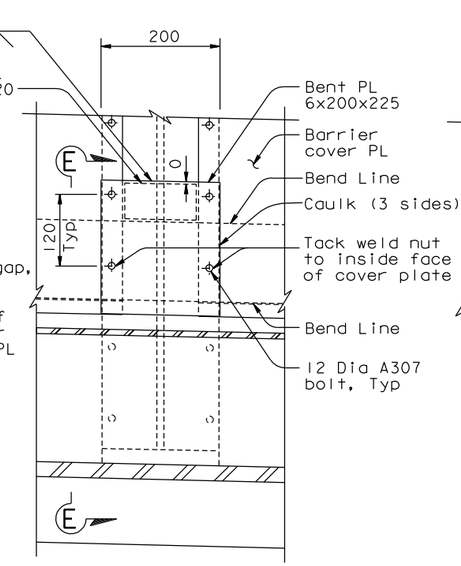


## SECTION B-B (At Typical Barrier Flange)

1:5

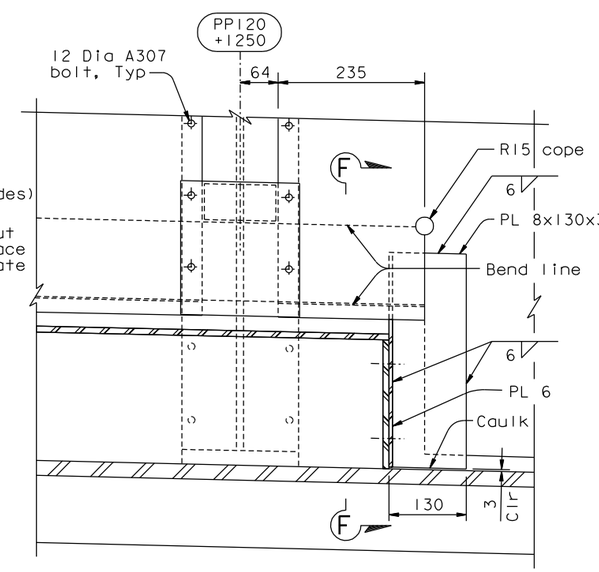


## SECTION C-C

1:5

NOTES:

1. For barrier details not shown, see "Barrier Details" sheets.
2. At the Contractor's option, 16 Dia oversize holes may be used in the cover plate with washer of sufficient size to cover the oversize holes, subject to review and approval of the Engineer.
3. Longitudinal stiffeners in saddle housing are not shown in plan for clarity.
4. For Sections D-D, E-E and F-F, see "Barrier Details No.2G" sheet.
5. Cable railing not shown for clarity.
6. Abandoned bolt holes in the barrier diaphragm flange plate shall be filled with caulk.
7. At the Contractor's option, M12 cap screw may be used, and a tapped hole in the barrier PL 12 may be used, for those bolts penetrating the barrier PL 12.

# ADDITIONAL BARRIER DETAILS AT EAST SADDLE HOUSING, E-LINE

CONTRACT CHANGE ORDER NO. ____
SHEET ____ OF ____

*REQUESTS FOR INFORMATION NOT ADDRESSED IN THIS CCO REMAIN IN FORCE*

ALL DIMENSIONS ARE IN MILLIMETERS UNLESS OTHERWISE SHOWN

R. Valizadeh/V. Toan/Y.L./W.L./F.C.
DESIGN OVERSIGHT
Reza Valizadeh / Vong Toan / Y. Liu
SIGN OFF DATE 12/08/11

| MARK | DATE | DESCRIPTIONS | BY | CH'D | CCO# |
|---|---|---|---|---|---|
| 0 | 12/08/11 | BARRIER COVER PL MODIFICATIONS | DT | HT | 227 |

REVISIONS

| | BY | CHECKED |
|---|---|---|
| DESIGN | D. Turner | H. Tazir |
| DETAILS | D. Turner | H. Tazir |
| QUANTITIES | D. Turner | H. Tazir |

PREPARED FOR THE STATE OF CALIFORNIA DEPARTMENT OF TRANSPORTATION

R. Manzanarez
PROJECT ENGINEER

BRIDGE NO. 34-0006L/R
KILOMETER POST 13.2/13.9

SAN FRANCISCO OAKLAND BAY BRIDGE
EAST SPAN SEISMIC SAFETY PROJECT
SELF-ANCHORED SUSPENSION BRIDGE
(SUPERSTRUCTURE & TOWER)

# BARRIER DETAILS NO. 2F

Rev. Date: 5-18-98

ORIGINAL SCALE IN MILLIMETERS FOR REDUCED PLANS 0 10 20 30 40 50 60 70 80 90 100

CU 04
EA 0120F1

DISREGARD PRINTS BEARING EARLIER REVISION DATES

REVISION DATES (PRELIMINARY STAGE ONLY) 12/08/11

SHEET 473S6 OF

FILE => I:\bb\04-012001\sas\contract plans and cco\cco\cco#227\1-original 12-08-11\dgn\akbar03f.dgn

USERNAME => DWinrow DATE PLOTTED => 07 DEC 2011 TIME PLOTTED => 13:42:59

100 % PS&E