DIST.	COUNTY	ROUTE	KILOMETER POST TOTAL PROJECT	SHEET NO.	TOTAL SHEETS
04	SF	80	13.2/13.9	890S7R1	1204

Caltrans Metric

Daniel J. Turner
REGISTERED ENGINEER - CIVIL

12-08-11
PLANS APPROVAL DATE

REGISTERED PROFESSIONAL ENGINEER Daniel J. Turner No. C 65033 Exp. 06/30/13 CIVIL STATE OF CALIFORNIA

The State of California or its officers or agents shall not be responsible for the accuracy or completeness of electronic copies of this plan sheet.

T.Y. LIN / MOFFATT & NICHOL
825 BATTERY STREET
SAN FRANCISCO, CA 94111

Caltrans now has a web site! To get to the web site, go to: http://www.dot.ca.gov

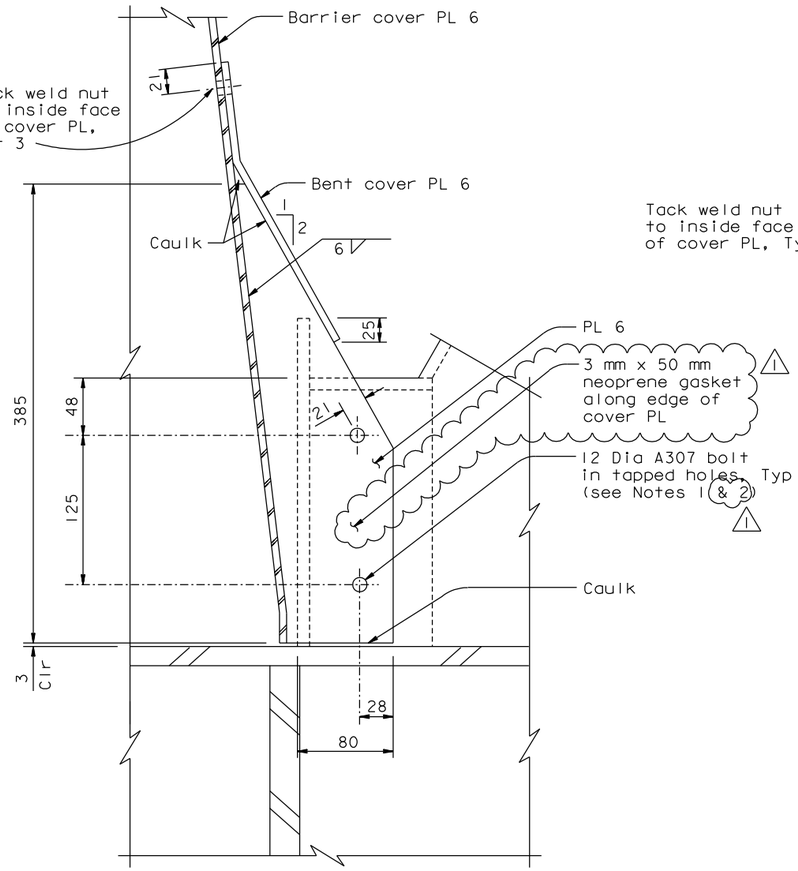

SECTION D-D
1:2.5

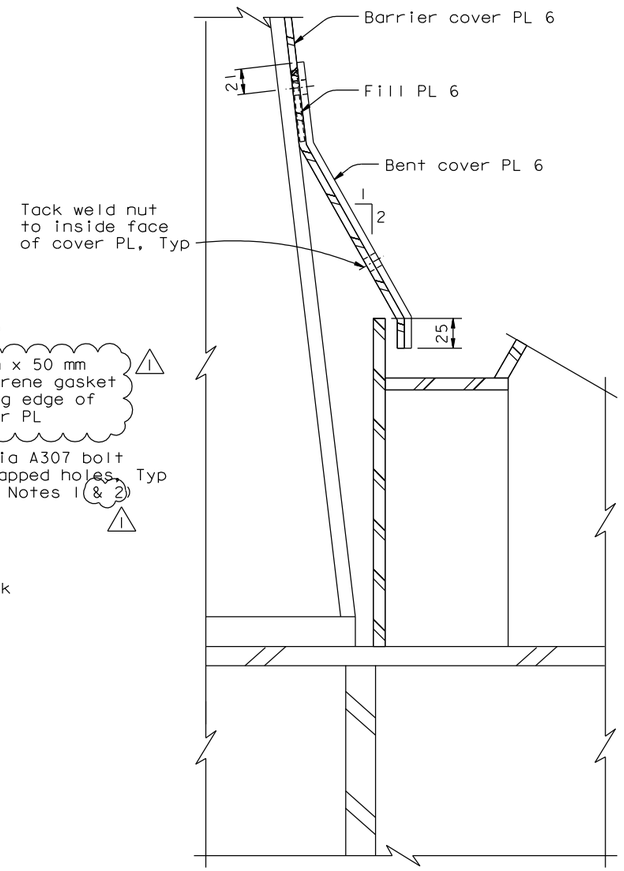

SECTION E-E
1:2.5

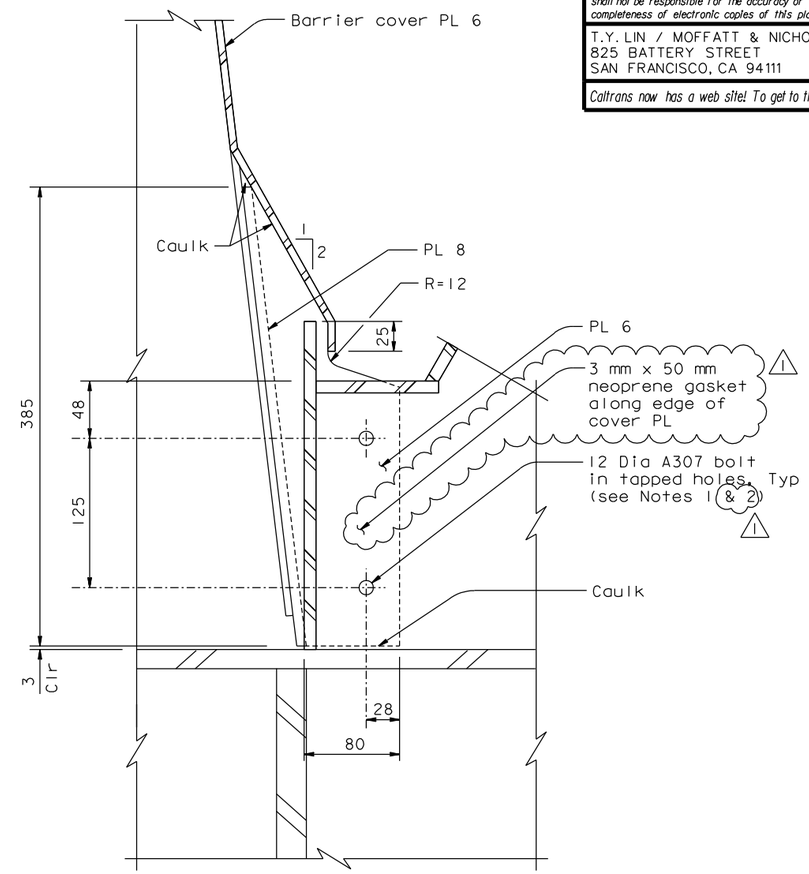

SECTION F-F
1:2.5

NOTES:

1. At the Contractor's option, 16 Dia oversize holes may be used in the cover plate with washer of sufficient size to cover the oversize holes, subject to review and approval of the Engineer. All flat washers shall be sealing washers with bonded neoprene.
2. At Contractor's option, 12 Dia cap screws may be used in lieu of 12 Dia A307 bolts, subject to review and approval of the Engineer.

100 % PS&E

CONTRACT CHANGE ORDER NO. _____
SHEET ____ OF ____

REQUESTS FOR INFORMATION NOT ADDRESSED IN THIS CCO REMAIN IN FORCE

R. Valizadeh/V. Toan/Y.L./W.L./F.C.
DESIGN OVERSIGHT
Roya Valizadeh / Vong Toan / Y. Liu
SIGN OFF DATE 04/20/12

MARK	DATE	DESCRIPTIONS	BY	CH'D	CCO#
1	04/20/12	BARRIER COVER PL MODIFICATIONS	DT	HT	227
0	12/08/11	BARRIER COVER PL MODIFICATIONS	DT	HT	227

REVISIONS

DESIGN	BY D. Turner	CHECKED H. Tazir	
DETAILS	BY D. Turner	CHECKED H. Tazir	
QUANTITIES	BY D. Turner	CHECKED H. Tazir	

PREPARED FOR THE STATE OF CALIFORNIA DEPARTMENT OF TRANSPORTATION

ALL DIMENSIONS ARE IN MILLIMETERS UNLESS OTHERWISE SHOWN

R. Manzanarez
PROJECT ENGINEER

BRIDGE NO. 34-0006L/R
KILOMETER POST 13.2/13.9

SAN FRANCISCO OAKLAND BAY BRIDGE
EAST SPAN SEISMIC SAFETY PROJECT
SELF-ANCHORED SUSPENSION BRIDGE
(SUPERSTRUCTURE & TOWER)

BARRIER DETAILS NO. 2G

Rev. Date: 5-18-98

ORIGINAL SCALE IN MILLIMETERS FOR REDUCED PLANS 0 10 20 30 40 50 60 70 80 90 100

CU 04
EA 0120F1

DISREGARD PRINTS BEARING EARLIER REVISION DATES 12/08/11

REVISION DATES (PRELIMINARY STAGE ONLY)

SHEET 473S7R1 OF

FILE => I:\bb\04-012001\sas\contract plans and cco\cco\cco#227\2-update 04-20-12\dgn\akbar03g.dgn

USERNAME => DWinrow DATE PLOTTED => 20 APR 2012 TIME PLOTTED => 13:27:17