DIST.	COUNTY	ROUTE	KILOMETER POST TOTAL PROJECT	SHEET NO.	TOTAL SHEETS
04	SF	80	13.2/13.9	751R3	1204

Caltrans Metric

George Baker
REGISTERED ENGINEER - CIVIL
12-6-04
PLANS APPROVAL DATE

REGISTERED PROFESSIONAL ENGINEER George S. Baker No. C 57112 Exp. 12/31/05 CIVIL STATE OF CALIFORNIA

The State of California or its officers or agents shall not be responsible for the accuracy or completeness of electronic copies of this plan sheet.

T.Y. LIN / MOFFATT & NICHOL
825 BATTERY STREET
SAN FRANCISCO, CA 94111

Caltrans now has a web site! To get to the web site, go to: http://www.dot.ca.gov

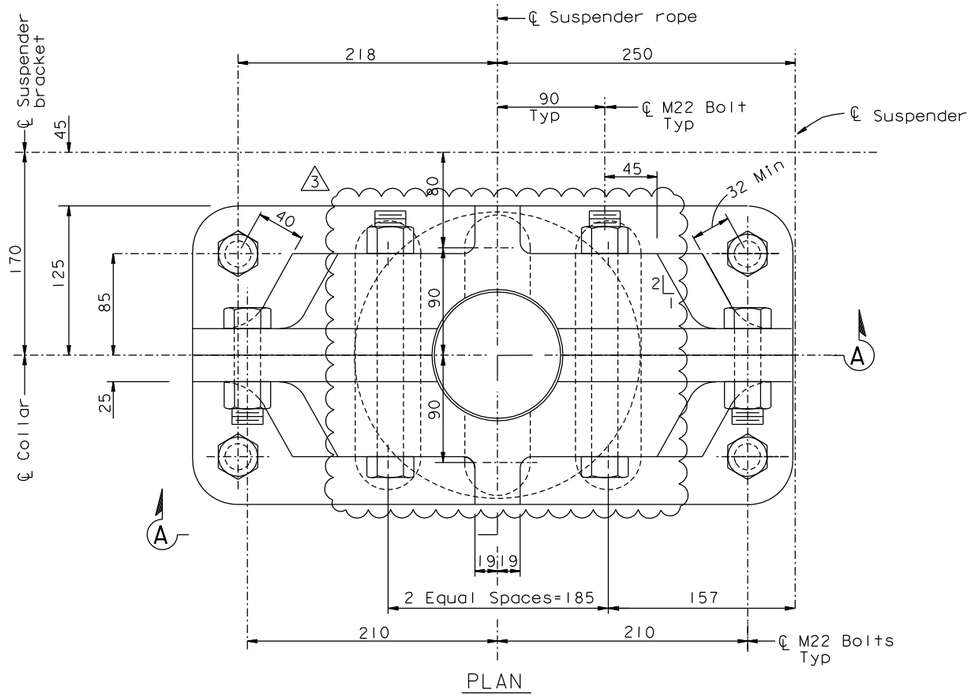

PLAN

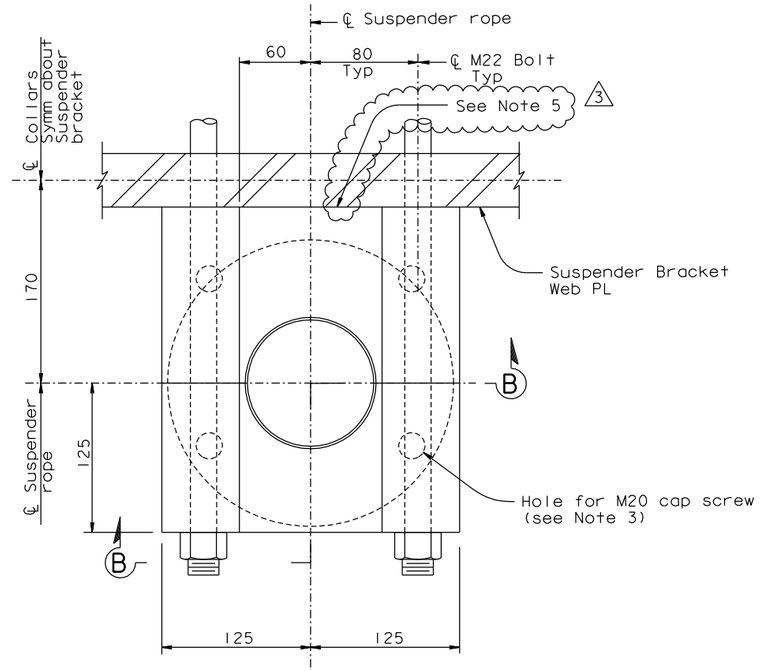

PLAN

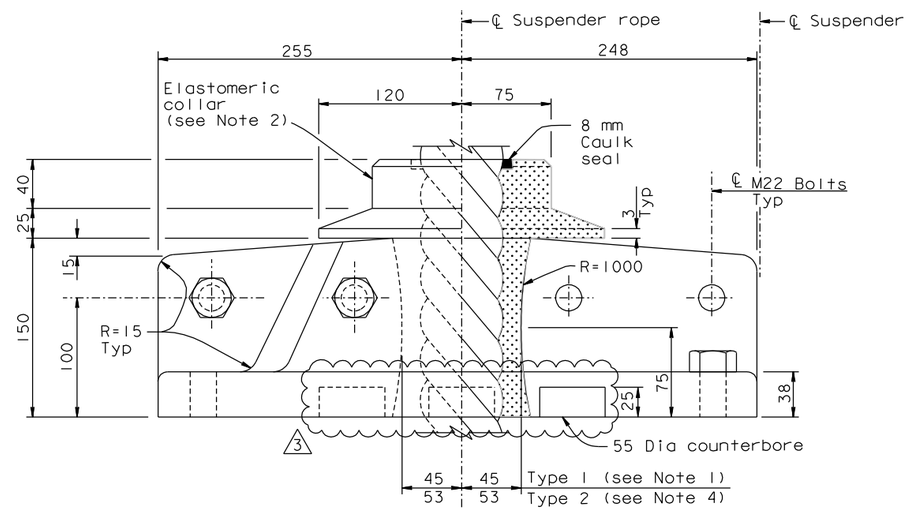

ELEVATION A-A

SPLIT COLLAR DETAIL

1:2.5

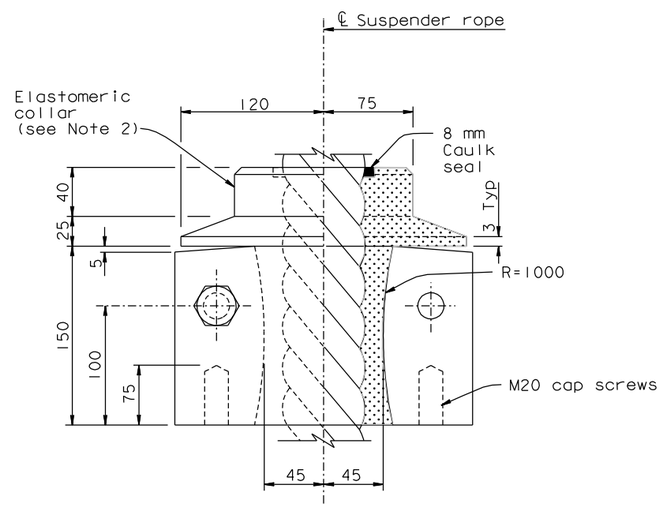

ELEVATION B-B

SPLIT COLLAR DETAIL

AT PANEL POINTS 104 TO 110
1:2.5

LEGEND:

Elastomeric collar in section

NOTES:

1. For location of suspender types, see "Suspender Layout No. 1" sheet.
2. Elastomeric collars shall be polyurethane, durometer 60, molded to fit suspender ropes.
3. Holes shall match those of seat plate detail, see "Suspender Bracket No. 6" sheet.
4. Collar dimension shown is for a 90 mm suspender rope size. If larger rope size is used, the dimension shall be equal to the rope radius plus 8 mm.
5. Machine face of split collar to fit 50 mm webs for suspender brackets at PP108 and PP110.

Daniel J. Turner
REGISTERED PROFESSIONAL ENGINEER Daniel J. Turner No. C 65033 Exp. 06/30/13 CIVIL STATE OF CALIFORNIA

FOR REVISIONS ONLY

CONTRACT CHANGE ORDER NO. _____
SHEET ____ OF ____

REQUESTS FOR INFORMATION NOT ADDRESSED IN THIS CCO REMAIN IN FORCE

MARK	DATE	DESCRIPTIONS	BY	CH'D	CCO#
3	12/09/11	SPLIT COLLAR ASSEMBLY	GB	DT	223
2	02/18/11	MISCELLANEOUS CABLE SYSTEM DETAILS	GB	DT	37S1
1	04/16/07	CABLE SYSTEM	GB	DT	37

REVISIONS

R. Valizadeh/V. Toan/Y.L./W.L./F.C.
DESIGN OVERSIGHT
SIGN OFF DATE 12/09/11

Rev. Date: 5-18-98

DESIGN	BY G. Baker	CHECKED	T. McMeans
DETAILS	BY S. Camo	CHECKED	P. Ritchie
QUANTITIES	BY C. Mauch	CHECKED	C. Mibelli

PREPARED FOR THE STATE OF CALIFORNIA DEPARTMENT OF TRANSPORTATION

R. Manzanarez
PROJECT ENGINEER

ALL DIMENSIONS ARE IN MILLIMETERS UNLESS OTHERWISE SHOWN

BRIDGE NO. 34-0006L/R
KILOMETER POST 13.2/13.9

SAN FRANCISCO OAKLAND BAY BRIDGE
EAST SPAN SEISMIC SAFETY PROJECT
SELF-ANCHORED SUSPENSION BRIDGE
(SUPERSTRUCTURE & TOWER)

SUSPENDER BRACKET DETAILS NO. 5

ORIGINAL SCALE IN MILLIMETERS FOR REDUCED PLANS 0 10 20 30 40 50 60 70 80 90 100

CU 04
EA 0120F1

DISREGARD PRINTS BEARING EARLIER REVISION DATES

REVISION DATES (PRELIMINARY STAGE ONLY) 05/15/99 08/02/99 05/31/01 04/08/02 07/04/02 12/19/02

SHEET 334R3 OF

FILE => I:\bb\04-012001\sas\contract plans and cco\cco\cco*223\1-original 12-09-11\dgn\agsad12b.dgn

USERNAME => DWinrow DATE PLOTTED => 07 DEC 2011 TIME PLOTTED => 13:30:15

100% PS&E