DIST.	COUNTY	ROUTE	KILOMETER POST TOTAL PROJECT	SHEET NO.	TOTAL SHEETS
04	SF, Ala	80	13.9/14.3, 0.0/2.7	1164S14R1	1204

REGISTERED ENGINEER - CIVIL

08-12-11

PLANS APPROVAL DATE

REGISTERED PROFESSIONAL ENGINEER A.L. Ely No. C 18880 Exp. 06/30/13 CIVIL STATE OF CALIFORNIA

The State of California or its officers or agents shall not be responsible for the accuracy or completeness of electronic copies of this plan sheet.

T.Y. LIN / MOFFATT & NICHOL
TWO HARRISON STREET
SAN FRANCISCO, CA 94105

Caltrans now has a web site! To get to the web site, go to: http://www.dot.ca.gov

October 26, 2010

100 % PS&E

USERNAME => DWinrow DATE PLOTTED => 04 NOV 2011 TIME PLOTTED => 15:49:27

⚠1 This Sheet Intentionally Left Blank.

CONTRACT CHANGE ORDER NO. 219
SHEET 2 OF 4

REQUESTS FOR INFORMATION NOT ADDRESSED IN THIS CCO REMAIN IN FORCE

W. Long, Y. Liu
DESIGN OVERSIGHT
Wenge Long / Y Liu
SIGN OFF DATE 11/04/11

MARK	DATE	DESCRIPTIONS	BY	CH'D	CCO#
1	11/04/11	SKYWAY DIVIDER RAIL MODIFICATIONS	AE	JB	219
0	08/12/11	SKYWAY BIKEPATH RAILING MODIFICATIONS	AE	JB	179

REVISIONS

	BY	CHECKED
DESIGN	J. Birdy	A. L. Ely
DETAILS	J. Birdy	A. L. Ely
QUANTITIES	J. Birdy	A. L. Ely

PREPARED FOR THE STATE OF CALIFORNIA DEPARTMENT OF TRANSPORTATION

R. Manzanarez
PROJECT ENGINEER

BRIDGE NO. 34-0006 L/R
KILOMETER POST 13.9/14.3, 0.0/2.7

SAN FRANCISCO OAKLAND BAY BRIDGE
EAST SPAN SEISMIC SAFETY PROJECT

SKYWAY CLEANUP ITEMS

BIKEPATH RAILING SHIMS

Rev. Date: 5-18-98

ORIGINAL SCALE IN MILLIMETERS FOR REDUCED PLANS 0 10 20 30 40 50 60 70 80 90 100

CU 04
EA 0120F1

DISREGARD PRINTS BEARING EARLIER REVISION DATES → 08/12/11

REVISION DATES (PRELIMINARY STAGE ONLY)

SHEET 747S14R1 OF

FILE => I:\bb\04-012001\sas\contract plans and cco\cco\cco#219\1-original 11-04-11\dgn\04-0120f1-t-bkr101.dgn

DIST.	COUNTY	ROUTE	KILOMETER POST TOTAL PROJECT	SHEET NO.	TOTAL SHEETS
04	SF, Ala	80	13.9/14.3, 0.0/2.7	1164525R1	1204

REGISTERED ENGINEER - CIVIL

11-04-11

PLANS APPROVAL DATE

REGISTERED PROFESSIONAL ENGINEER James P. Duxbury No. C 64677 Exp. 06/30/13 CIVIL STATE OF CALIFORNIA

The State of California or its officers or agents shall not be responsible for the accuracy or completeness of electronic copies of this plan sheet.

T.Y. LIN / MOFFATT & NICHOL
TWO HARRISON STREET
SAN FRANCISCO, CA 94105

Caltrans now has a web site! To get to the web site, go to: http://www.dot.ca.gov

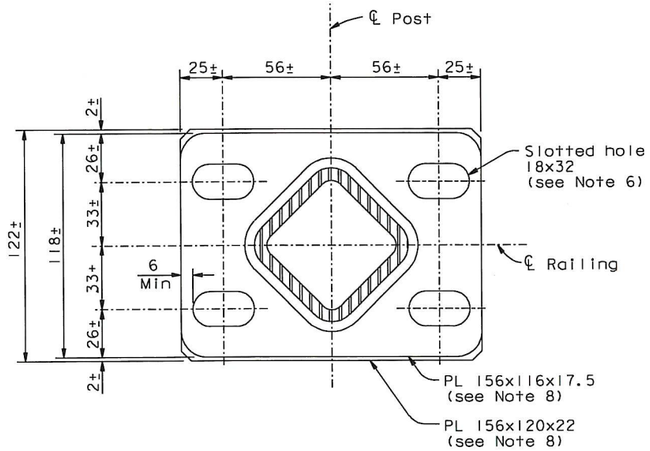

POST BASEPLATE

1:1.5

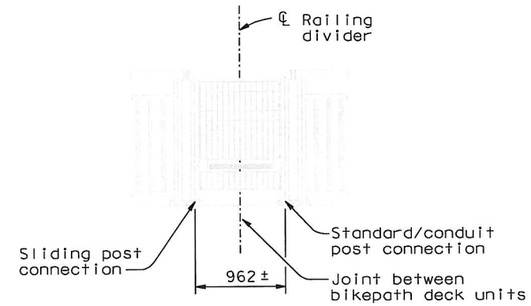

EXISTING BIKEPATH RAILING

1:30

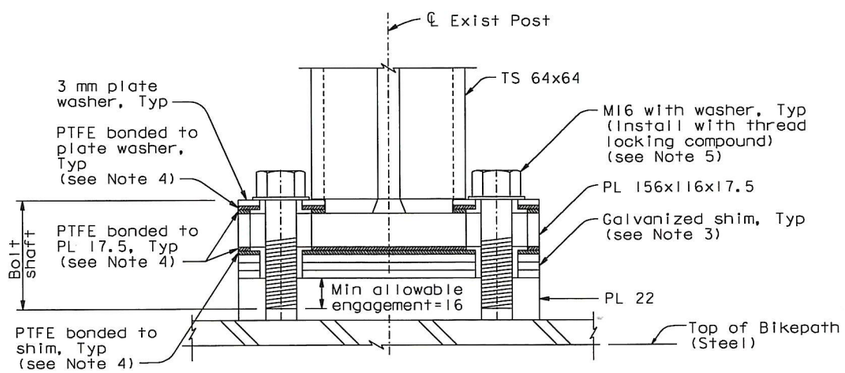

SECTION AT SLIDING POST

1:1.5

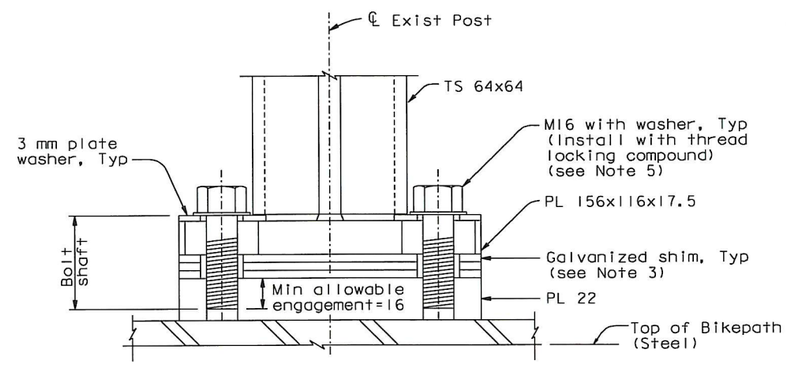

SECTION AT STANDARD/CONDUIT POST

1:1.5

RECOMMENDED BOLT ALIGNMENT PROCEDURE:

1. Install sliding post with the bolts centered in the slots. Use sliding plate washer.
2. Install standard/conduit post.
3. If the bolt in the standard/conduit post is located in the center or to the inside (toward the post) of the slot, then use the inner plate washer.
4. If the bolt in the standard/conduit post is located in the center or to the outside (away from the post) of the slot, then use the outer plate washer.

NOTES:

1. The Contractor shall verify all controlling field dimensions before ordering or fabricating any material or performing any work that might thereby be affected.
2. Sliding post shall be installed with the bolts centered in the slots (± 3 mm).
3. The Contractor may use shims as necessary to align top rail of bikepath railing. One shim may be tapered.
4. PTFE shall be unfilled virgin grade sheets, 1.5 to 2 mm thick. Use Reifer Bondit B-45TH or equivalent to bond PTFE to steel surfaces. Surface preparation for PTFE and steel mating surfaces and application of this bonding agent shall follow the manufacturer's recommendations. For PTFE outlines, see "Modified Bikepath Railing Details No. 2" sheet. (1)
5. All M16 bolts shall be new. Bolts on sliding post shall be tightened to snug tight. Bolts on standard/conduit posts shall be tightened to snug tight plus 1/4 turn.
6. Width of slotted hole to match existing field conditions. 18 dimension based on Contractor's field survey and may vary.
7. All bolt holes shall be cleaned free of paint, rust and grime.
8. Repair existing galvanized and painted surfaces as directed by the Engineer.

CONTRACT CHANGE ORDER NO. 219
SHEET 3 OF 4

REQUESTS FOR INFORMATION NOT ADDRESSED IN THIS CCO REMAIN IN FORCE

W. Long, Y. Liu
DESIGN OVERSIGHT
Wenyi Long / Y Liu
SIGN OFF DATE 12/16/11

MARK	DATE	DESCRIPTIONS	BY	CH'D	CCO#
1	12/16/11	SKYWAY DIVIDER RAIL MODIFICATIONS	RI	JD	219
0	11/04/11	SKYWAY DIVIDER RAIL MODIFICATIONS	RI	JD	219

REVISIONS

	BY	CHECKED
DESIGN	R. Iliya	J. Duxbury
DETAILS	A. Baumberger	H. Tazir
QUANTITIES	A. Baumberger	H. Tazir

PREPARED FOR THE STATE OF CALIFORNIA DEPARTMENT OF TRANSPORTATION

R. Manzanarez
PROJECT ENGINEER

BRIDGE NO. 34-0006 L/R
KILOMETER POST 13.9/14.3, 0.0/2.7

SAN FRANCISCO OAKLAND BAY BRIDGE
EAST SPAN SEISMIC SAFETY PROJECT

SKYWAY CLEANUP ITEMS

MODIFIED BIKEPATH RAILING DETAILS NO. 1

Rev. Date: 5-18-98

ORIGINAL SCALE IN MILLIMETERS FOR REDUCED PLANS 0 10 20 30 40 50 60 70 80 90 100

CU 04
EA 0120F1

DISREGARD PRINTS BEARING EARLIER REVISION DATES 11/04/11

REVISION DATES (PRELIMINARY STAGE ONLY)

SHEET 747 OF 1204

FILE => I:\bb\04-0120F1\sas\contract plans and cco\cco\cco#219\2-revision 12-16-11\dgn\akr1g11.dgn

October 26, 2010

100% PS&E

USERNAME => DWinrow DATE PLOTTED => 16 DEC 2011 TIME PLOTTED => 14:37:26

DIST.	COUNTY	ROUTE	KILOMETER POST TOTAL PROJECT	SHEET NO.	TOTAL SHEETS
04	SF, Ala	80	13.9/14.3, 0.0/2.7	1164S26R1	1204

Caltrans Metric

REGISTERED ENGINEER - CIVIL

11-04-11

PLANS APPROVAL DATE

REGISTERED PROFESSIONAL ENGINEER James P. Duxbury No. C 64677 Exp. 06/30/13 CIVIL STATE OF CALIFORNIA

The State of California or its officers or agents shall not be responsible for the accuracy or completeness of electronic copies of this plan sheet.

T.Y. LIN / MOFFATT & NICHOL
TWO HARRISON STREET
SAN FRANCISCO, CA 94105

Caltrans now has a web site! To get to the web site, go to: http://www.dot.ca.gov

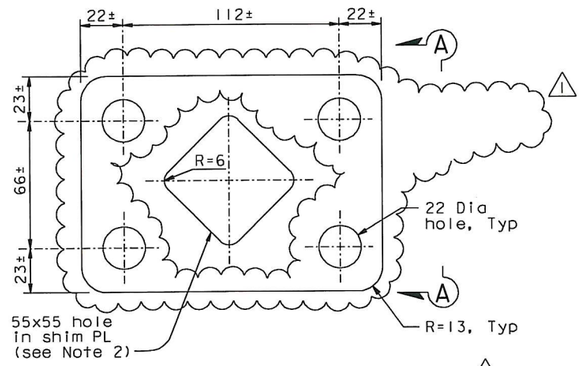

SHIM DETAIL (See Note 5)
1:1.5

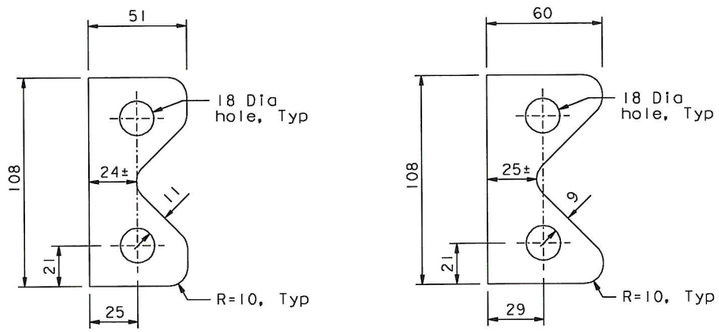

SLIDING (See Note 3)

FIXED-INNER

FIXED-OUTER

PLATE WASHER DETAIL (See Note 1)
1:1.5

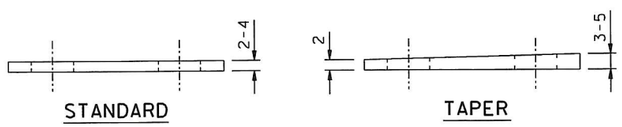

STANDARD

TAPER

VIEW A-A
1:1.5

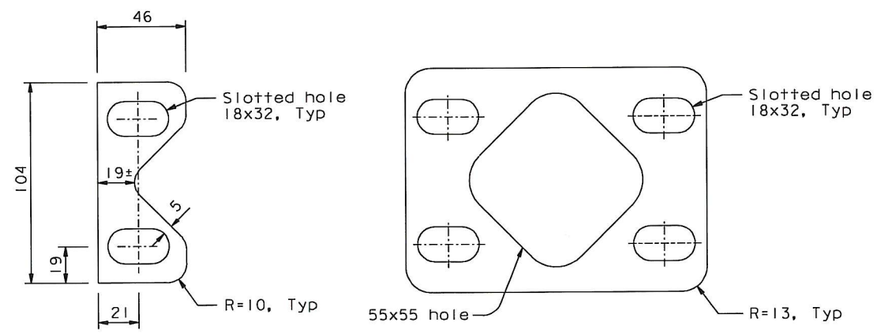

AT TOP OF BASE PLATE

AT BOTTOM OF BASE PLATE (See Note 4)

PTFE OUTLINE AT BASE PLATE
1:1.5

NOTES:

1. Washer plate shall be ASTM A709 Grade 345, galvanized.
2. 55x55 hole required at standard/conduit post only.
3. PTFE at sliding plate washer shall match sliding plate washer dimensions.
4. PTFE at bottom of base plate shall match bottom of base plate dimensions.
5. PTFE at shim shall match shim dimensions. (1)

CONTRACT CHANGE ORDER NO. 219
SHEET 4 OF 4

REQUESTS FOR INFORMATION NOT ADDRESSED IN THIS CCO REMAIN IN FORCE

MARK	DATE	DESCRIPTIONS	BY	CH'D	CCO#
1	12/16/11	SKYWAY DIVIDER RAIL MODIFICATIONS	RI	JD	219
0	11/04/11	SKYWAY DIVIDER RAIL MODIFICATIONS	RI	JD	219

REVISIONS

W. Long, Y. Liu
DESIGN OVERSIGHT
Wenyi Long / Y Liu
SIGN OFF DATE 12/16/11

DESIGN	BY R. Illya	CHECKED J. Duxbury	
DETAILS	BY A. Baumberger	CHECKED H. Tazir	
QUANTITIES	BY A. Baumberger	CHECKED H. Tazir	

PREPARED FOR THE STATE OF CALIFORNIA DEPARTMENT OF TRANSPORTATION

R. Manzanarez
PROJECT ENGINEER

BRIDGE NO. 34-0006 L/R
KILOMETER POST 13.9/14.3, 0.0/2.7

SAN FRANCISCO OAKLAND BAY BRIDGE
EAST SPAN SEISMIC SAFETY PROJECT

SKYWAY CLEANUP ITEMS

MODIFIED BIKEPATH RAILING DETAILS NO. 2

Rev. Date: 5-18-98

ORIGINAL SCALE IN MILLIMETERS FOR REDUCED PLANS 0 10 20 30 40 50 60 70 80 90 100

CU 04
EA 0120F1

DISREGARD PRINTS BEARING EARLIER REVISION DATES 11/04/11

REVISION DATES (PRELIMINARY STAGE ONLY)

SHEET 747S26R1 OF

FILE => I:\bb\04-012001\sas\contract plans and cco\cco\cco#219\2-revision 12-16-11\dgn\akrlgl2.dgn

October 26, 2010

100% PS&E

USERNAME => DWinrow DATE PLOTTED => 16 DEC 2011 TIME PLOTTED => 14:41:33