DIST.	COUNTY	ROUTE	KILOMETER POST TOTAL PROJECT	SHEET NO.	TOTAL SHEETS
04	SF	80	13.2/13.9	900R7	1204

REGISTERED ENGINEER - CIVIL

12-6-04
PLANS APPROVAL DATE

REGISTERED PROFESSIONAL ENGINEER Tien Hung Ho No. C 43990 Exp. 6/30/15 CIVIL STATE OF CALIFORNIA

The State of California or its officers or agents shall not be responsible for the accuracy or completeness of electronic copies of this plan sheet.

T.Y. LIN / MOFFATT & NICHOL
825 BATTERY STREET
SAN FRANCISCO, CA 94111

Caltrans now has a web site! To get to the web site, go to: http://www.dot.ca.gov

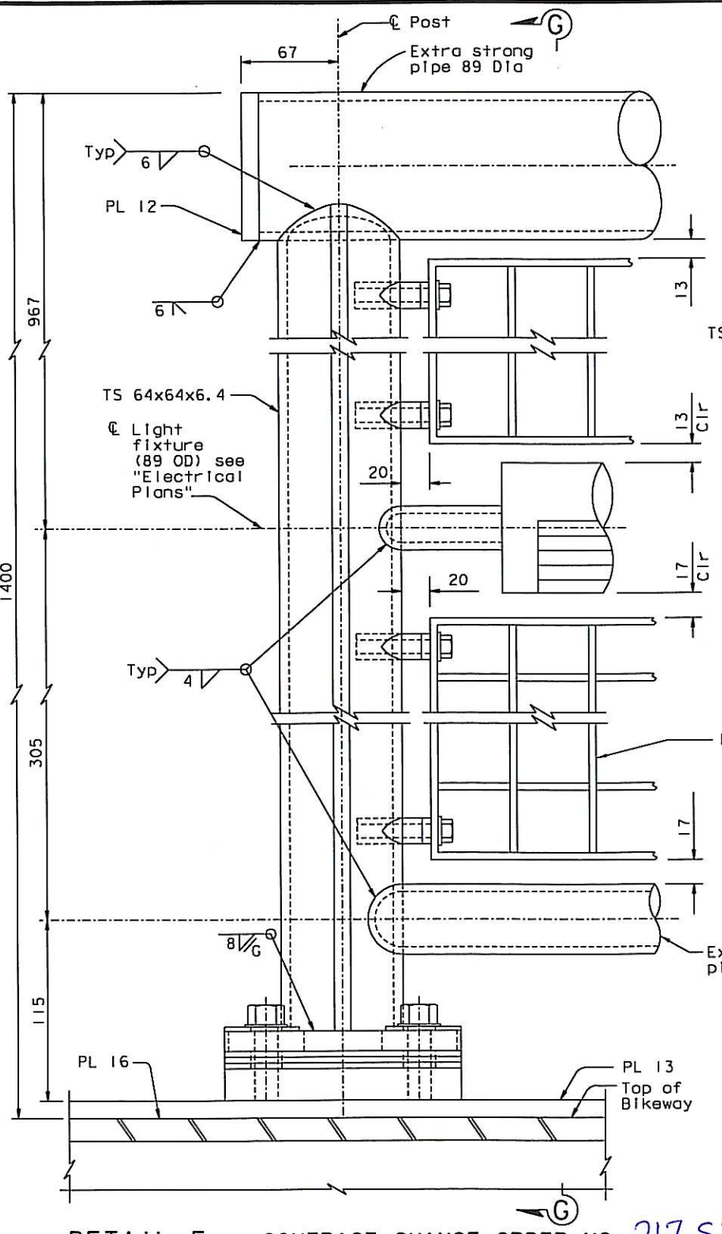

DETAIL F
1:2

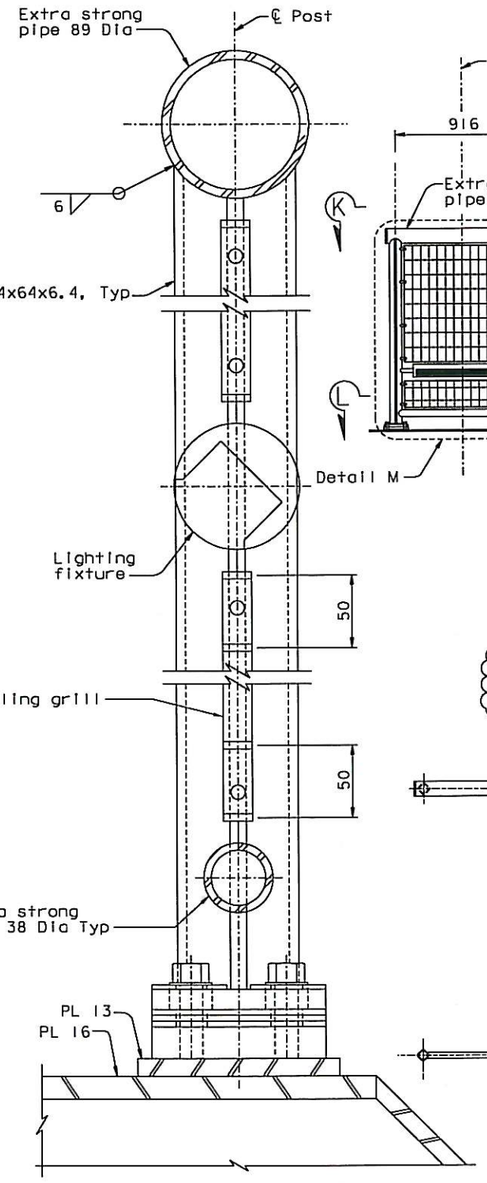

SECTION G-G
1:2

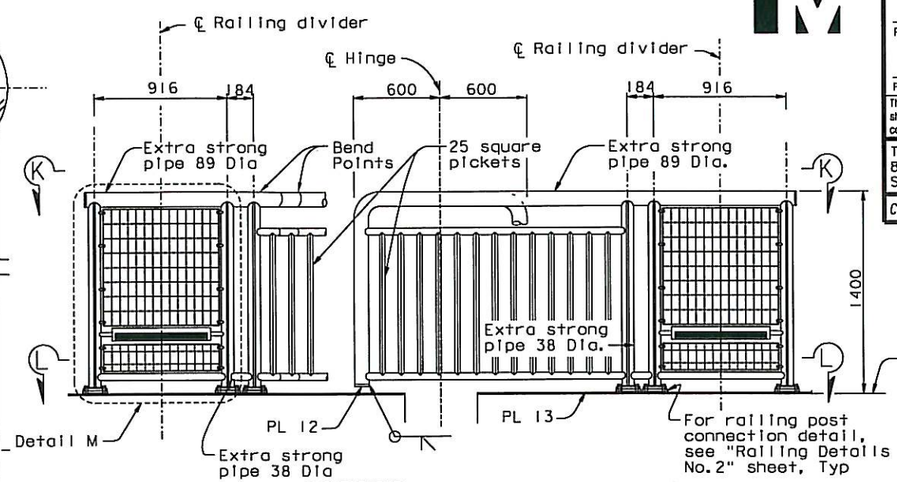

TYPICAL ELEVATION (See Note 6) 7
1:20

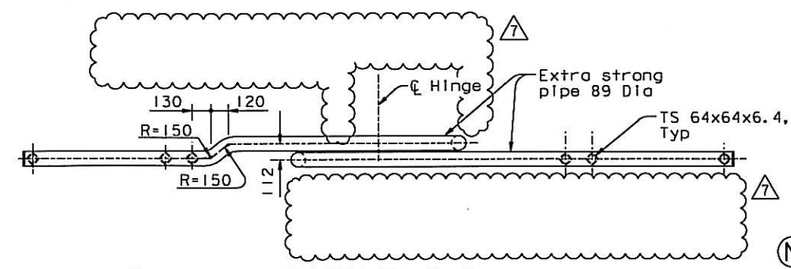

SECTION K-K
1:20

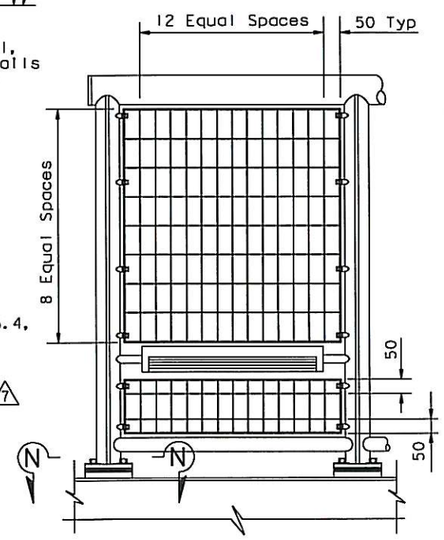

DETAIL M
1:10

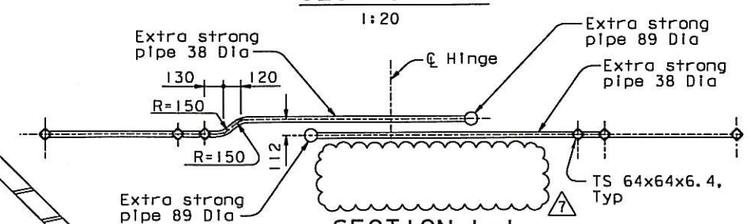

SECTION L-L
1:20

TYPICAL 7

RAILING EXPANSION JOINT DETAILS (See Note 6) 7

NOTES:

1. For details not shown, see "Railing Details No.1", "Railing Details No.2" sheets and "Railing Details No.3A".
2. For expansion joint details, see "Hinge K Expansion Joint Details" and "Hinge A Expansion Joint Details" sheets.
3. Railing to match adjoining Skyway Structure, Contract 04-012024.
4. For details of holes on both North and South divider railings, see "Typical Bikepath Lighting" in the "Roadway Plans" and "Railing Details No.3A" sheets.
5. For Section N-N, see "Railing Details No.3A" sheet.
6. For Railing Expansion Joint Details at Hinge A, see "Railing Details No.3E" sheet. 7

CONTRACT CHANGE ORDER NO. 217S2
SHEET 2 OF 5

REGISTERED PROFESSIONAL ENGINEER James P. Duxbury No. C 64677 Exp. 06/30/13 CIVIL STATE OF CALIFORNIA

FOR REVISION 6 ONLY

REQUESTS FOR INFORMATION NOT ADDRESSED IN THIS CCO REMAIN IN FORCE

MARK	DATE	DESCRIPTIONS	BY	CH'D	CCO#
7	09/06/13	SKYWAY BIKEPATH HINGE	AB	TH	217S2
6	12/09/11	BIKEPATH HANDRAIL MODIFICATIONS	DT	JD	169
5	04/01/11	BIKEPATH CONDUIT	TH	JD	73
4	08/20/10	BIKEPATH DETAILS	TH	CC	99
3	04/22/09	BIKEPATH DETAILS	TH	MN	99
2	01/30/09	BIKEPATH DETAILS	TH	MN	99
1	11/26/08	BIKEPATH DETAILS	TH	MN	99

REVISIONS

R. Vallizadeh/V. Toan/Y.L./W.L./F.C.
DESIGN OVERSIGHT
SIGN OFF DATE 09/06/13

Rev. Date: 5-18-98

ALL DIMENSIONS ARE IN MILLIMETERS UNLESS OTHERWISE SHOWN

DESIGN	BY T. Ho	CHECKED C. Redfield	
DETAILS	BY R. Xu	CHECKED C. Redfield	
QUANTITIES	BY G. Baker	CHECKED K. Cormier	

PREPARED FOR THE STATE OF CALIFORNIA DEPARTMENT OF TRANSPORTATION

R. Manzanarez
PROJECT ENGINEER

BRIDGE NO. 34-0006L/R
KILOMETER POST 13.2/13.9

SAN FRANCISCO OAKLAND BAY BRIDGE
EAST SPAN SEISMIC SAFETY PROJECT
SELF-ANCHORED SUSPENSION BRIDGE
(SUPERSTRUCTURE & TOWER)

RAILING DETAILS NO. 3

ORIGINAL SCALE IN MILLIMETERS FOR REDUCED PLANS 0 10 20 30 40 50 60 70 80 90 100

CU 04
EA 0120F1

DISREGARD PRINTS BEARING EARLIER REVISION DATES

REVISION DATES (PRELIMINARY STAGE ONLY) 05/15/99 05/27/99 05/27/01 01/28/02 07/29/02 12/13/02

SHEET 483R7 OF

FILE => L:\BB\04-012001\SAS\Contract Plans and CCO\CCO\CCO#21752\3-Revision 09-06-13\DGN\akrlg06.dgn

USERNAME => DWinrow DATE PLOTTED => 06 SEP 2013 TIME PLOTTED => 15:04:36

100% PS&E

DIST.	COUNTY	ROUTE	KILOMETER POST TOTAL PROJECT	SHEET NO.	TOTAL SHEETS
04	SF	80	13.2/13.9	900S5R1	1204

REGISTERED ENGINEER - CIVIL

09-06-13

PLANS APPROVAL DATE

Tian Hung Ho No. C 43990 Exp. 06/30/15 CIVIL STATE OF CALIFORNIA

The State of California or its officers or agents shall not be responsible for the accuracy or completeness of electronic copies of this plan sheet.

T.Y. LIN / MOFFATT & NICHOL
825 BATTERY STREET
SAN FRANCISCO, CA 94111

Caltrans now has a web site! To get to the web site, go to: http://www.dot.ca.gov

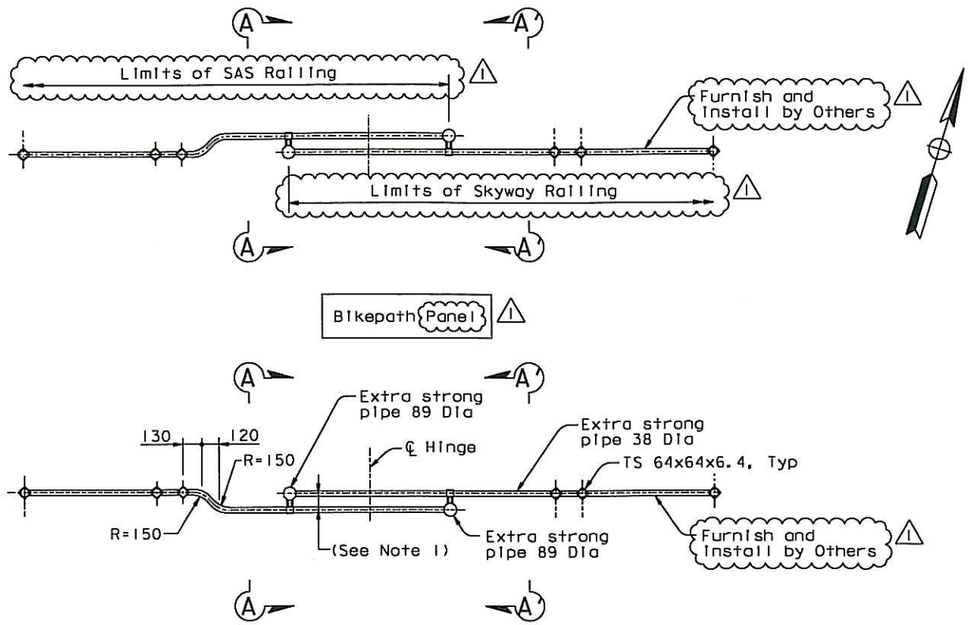

HINGE A
RAILING EXPANSION JOINT DETAILS
1:20

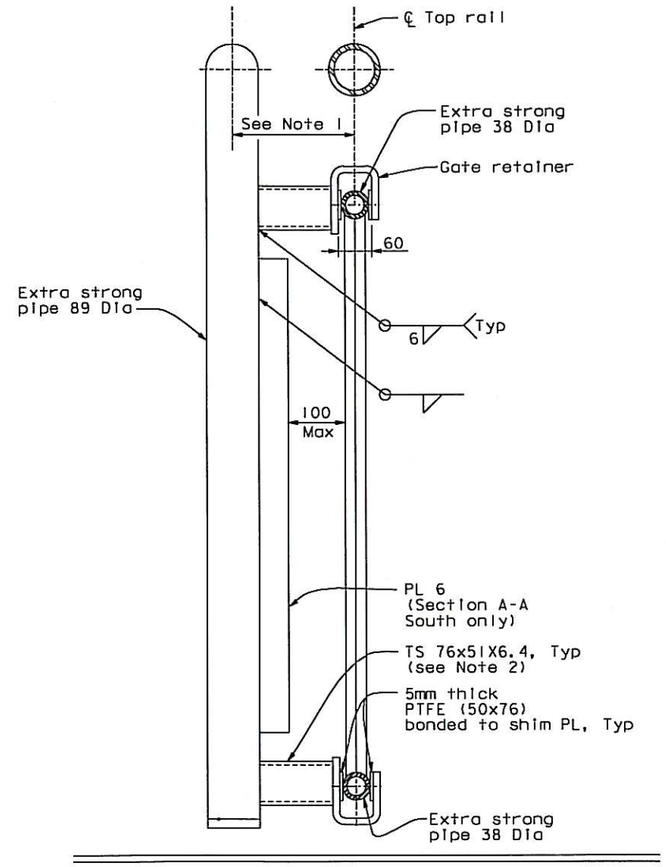

SECTION A-A (SECTION A'-A' SIMILAR)
1:5

NOTES:

1. Spacing for south railing posts shall be determined by the Engineer following railing alignment adjustment by the Contractor. North railing posts shall be left in their natural position prior to welding gate retainer to the fixed railing.
2. Location and length of TS 76x51 shall be determined by field measurements. Extension plates may be required.

CONTRACT CHANGE ORDER NO. 217S2
SHEET 3 OF 5

REQUESTS FOR INFORMATION NOT ADDRESSED IN THIS CCO REMAIN IN FORCE

ALL DIMENSIONS ARE IN MILLIMETERS UNLESS OTHERWISE SHOWN

A. Akinsanya / W. Long
DESIGN OVERSIGHT
SIGN OFF DATE 09/17/13

MARK	DATE	DESCRIPTIONS	BY	CH'D	CCO#
1	09/17/13	SKYWAY BIKEPATH HINGE	AB	TH	217S2
0	09/06/13	SKYWAY BIKEPATH HINGE	AB	TH	217S2

REVISIONS

DESIGN	BY A. Baumberger	CHECKED T. Ho	
DETAILS	BY A. Baumberger	CHECKED T. Ho	
QUANTITIES	BY A. Baumberger	CHECKED T. Ho	

PREPARED FOR THE STATE OF CALIFORNIA DEPARTMENT OF TRANSPORTATION

M. Nader
PROJECT ENGINEER

BRIDGE NO. 34-0006L/R
KILOMETER POST 13.2/13.9

SAN FRANCISCO OAKLAND BAY BRIDGE
EAST SPAN SEISMIC SAFETY PROJECT
SELF-ANCHORED SUSPENSION BRIDGE
(SUPERSTRUCTURE & TOWER)

RAILING DETAILS NO. 3E

Rev. Date: 5-22-13

ORIGINAL SCALE IN MILLIMETERS FOR REDUCED PLANS 0 10 20 30 40 50 60 70 80 90 100

CU 04
EA 0120F1

DISREGARD PRINTS BEARING EARLIER REVISION DATES 09/06/13

REVISION DATES (PRELIMINARY STAGE ONLY)

SHEET 183S5R1 OF

FILE => I:\bb\04-01200I\sas\contract plans and cco\cco\cco#217s2\4-revision 09-17-13\dgn\akrig04a.dgn

100 % PS&E

DATE PLOTTED => 17 SEP 2013 TIME PLOTTED => 09:36:45

USERNAME => PHua

DIST.	COUNTY	ROUTE	KILOMETER POST TOTAL PROJECT	SHEET NO.	TOTAL SHEETS
04	SF	80	13.2/13.9	116459R5	1204

REGISTERED ENGINEER - CIVIL

04-15-11
PLANS APPROVAL DATE

REGISTERED PROFESSIONAL ENGINEER Alex E. Sanjines No. C 051153 Exp. 9/30/13 CIVIL STATE OF CALIFORNIA

The State of California or its officers or agents shall not be responsible for the accuracy or completeness of electronic copies of this plan sheet.

T.Y. LIN / MOFFATT & NICHOL
825 BATTERY STREET
SAN FRANCISCO, CA 94111

Caltrans now has a web site! To get to the web site, go to: http://www.dot.ca.gov

Caltrans Metric

LEGEND:
- Existing bolt holes
- Additional bolt holes

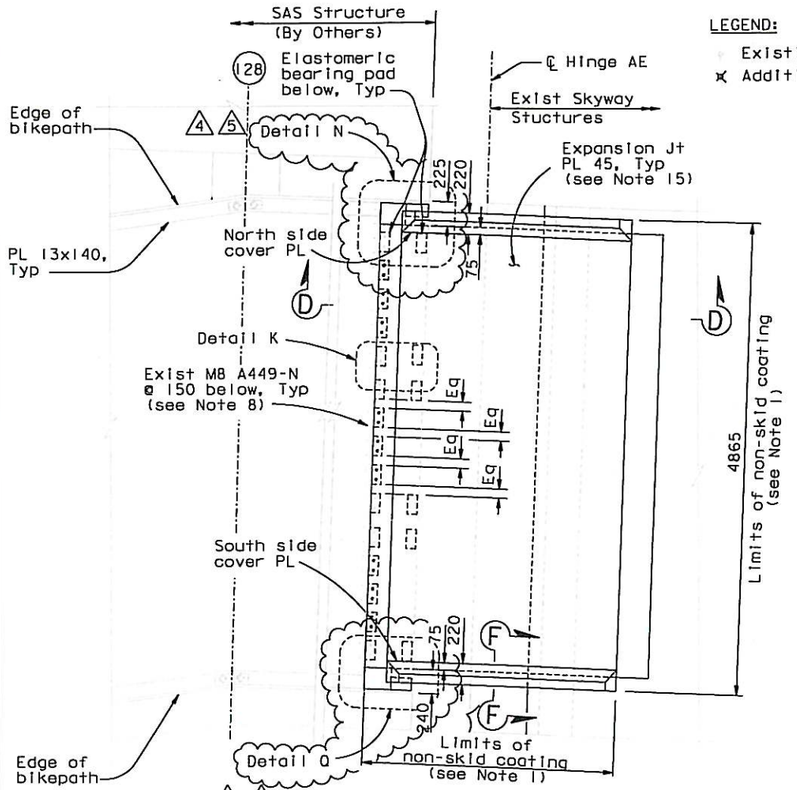

PLAN AT HINGE AE
1:30
(Internal stiffening and cover PL not shown for clarity)

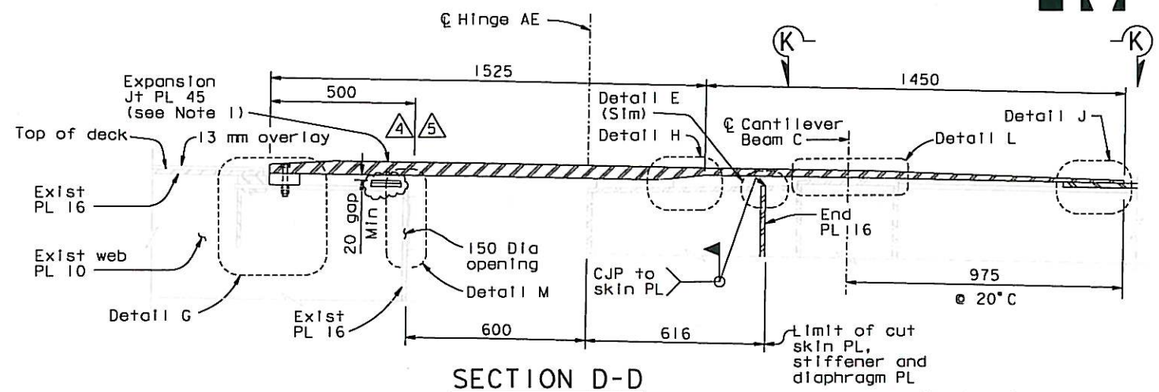

SECTION D-D
1:10

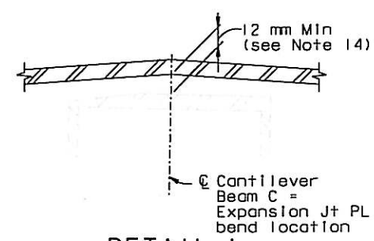

DETAIL L
NTS

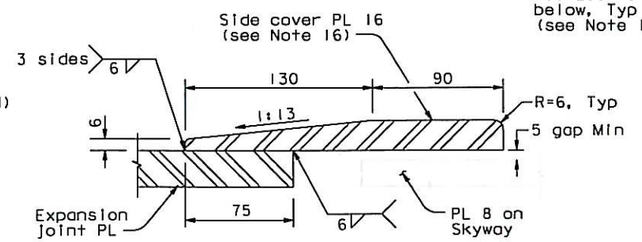

SECTION F-F
1:2

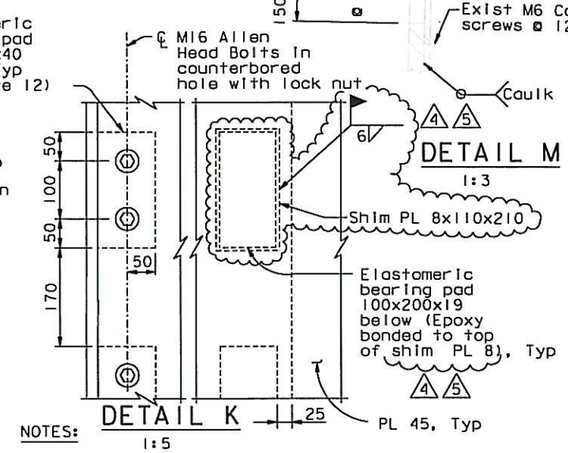

DETAIL M
1:3

DETAIL K
1:5

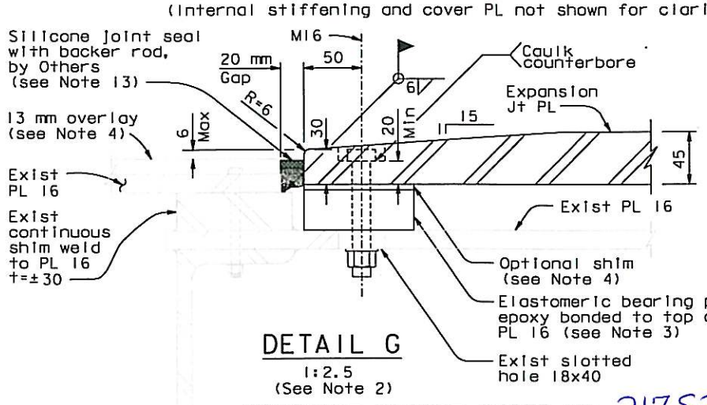

DETAIL G
1:2.5
(See Note 2)

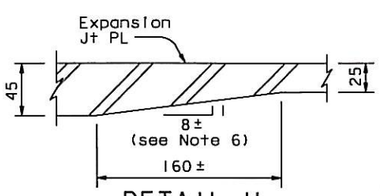

DETAIL H
1:2.5

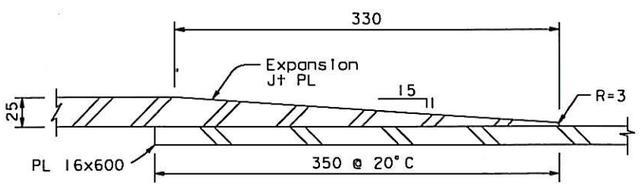

DETAIL J
1:2.5

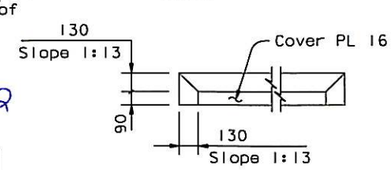

COVER PLATES LAYOUT
1:20 (South side shown, North side similar)

NOTES:
1. Top surface of exposed plates shall have non-skid coating, to be performed by Others. The non-skid coating shall match the existing color pattern. Where the tapered edge cover plate extends over the existing white edge of the bikepath panel, white finish paint shall be used in lieu of non-skid.
2. For details not shown, see SAS-"Bikepath Details" sheets.
3. Pre-compress elastomeric pad by 2 mm by means of 1 turn of M16 bolt.
4. Thickness of shim and overlay may vary to provide tolerance to adjust for As-Built Skyway.
5. NOTE DELETED
6. Slope shall match the slope of exist top PL of Cantilever Beam C.
7. The Contractor shall verify all the dimensions in field before fabricating the expansion joint plate. All the plates cut shall be ground square.
8. Bolts shall be installed with threads including in the shear plane.
9. NOTE DELETED
10. For Detail E, see "Skyway Bikepath Expansion Joint Replacement No. 1" sheet.
11. For Section K-K, see "Skyway Bikepath Expansion Joint Replacement No. 3A" sheet.
12. Thickness of elastomeric bearing pad is for information only. Contractor to field verify required thickness.
13. Top of silicone joint seal shall be no more than 6 mm lower than top of expansion Jt PL.
14. Expansion plate shall be fabricated to fit the as-built Skyway and SAS Bikepaths. Expansion plate shall be bent at the centerline of cantilever beam C or cambered.
15. At the Contractor's option, expansion Jt PL 45 may be fabricated with up to 2 longitudinal joints. Longitudinal joints shall be welded with a 10 PJP, top and bottom.
16. Side cover PL 16 shall follow profile of expansion Jt PL 45.
17. For Details N and Q, see "Skyway Bikepath Expansion Joint Replacement No. 3A" sheet.

ALL DIMENSIONS ARE IN MILLIMETERS UNLESS OTHERWISE SHOWN

CONTRACT CHANGE ORDER NO. 217S2
SHEET 4 OF 5

REQUESTS FOR INFORMATION NOT ADDRESSED IN THIS CCO REMAIN IN FORCE

MARK	DATE	DESCRIPTIONS	BY	CH'D	CCO#
5	03/25/14	SKYWAY BIKEPATH HINGE	AB	AS	217S2
4	08/28/13	SKYWAY BIKEPATH HINGE	DT	AS	217S2
3	01/18/13	SKYWAY NON-SKID	JD	AS	217S1
2	10/04/12	SKYWAY NON-SKID	JD	AS	217S1
1	03/13/12	SKYWAY BIKEPATH HINGE	CC	AS	217S1
0	04/15/11	SKYWAY BIKEPATH EXPANSION JOINT	AS	HP	193

REVISIONS

R. Vallzadeh/V. Toan/Y.L./W.L./F.C.
DESIGN OVERSIGHT
SIGN OFF DATE 03/25/14

	BY	CHECKED
DESIGN	A. Sanjines	H. Patel
DETAILS	A. Sanjines	H. Patel
QUANTITIES	A. Sanjines	H. Patel

PREPARED FOR THE STATE OF CALIFORNIA DEPARTMENT OF TRANSPORTATION

R. Manzanarez
PROJECT ENGINEER

BRIDGE NO. 34-0006L/R
KILOMETER POST 13.2/13.9

SAN FRANCISCO OAKLAND BAY BRIDGE
EAST SPAN SEISMIC SAFETY PROJECT
SELF-ANCHORED SUSPENSION BRIDGE
(SUPERSTRUCTURE & TOWER)

SKYWAY BIKEPATH EXPANSION JOINT REPLACEMENT NO. 3

CU 04
EA 0120F1

DISREGARD PRINTS BEARING EARLIER REVISION DATES 04/15/11

SHEET 74759R5 OF

100 % PS&E

Rev. Date: 5-18-98

ORIGINAL SCALE IN MILLIMETERS FOR REDUCED PLANS 0 10 20 30 40 50 60 70 80 90 100

FILE => I:\bb\04-012001\sas\contract plans and cco\cco\cco#21762\7-revision 03-25-14\dgn\sbjnt03.dgn

USERNAME => msmith DATE PLOTTED => 28 MAR 2014 TIME PLOTTED => 14:23:06

DIST.	COUNTY	ROUTE	KILOMETER POST TOTAL PROJECT	SHEET NO.	TOTAL SHEETS
04	SF	80	13.2/13.9	116459AR4	1204

REGISTERED ENGINEER - CIVIL

03-13-12
PLANS APPROVAL DATE

REGISTERED PROFESSIONAL ENGINEER Alex E. Sanjines No. C 051153 Exp. 9/30/13 CIVIL STATE OF CALIFORNIA

The State of California or its officers or agents shall not be responsible for the accuracy or completeness of electronic copies of this plan sheet.

T.Y. LIN / MOFFATT & NICHOL
825 BATTERY STREET
SAN FRANCISCO, CA 94111

Caltrans now has a web site! To get to the web site, go to: http://www.dot.ca.gov

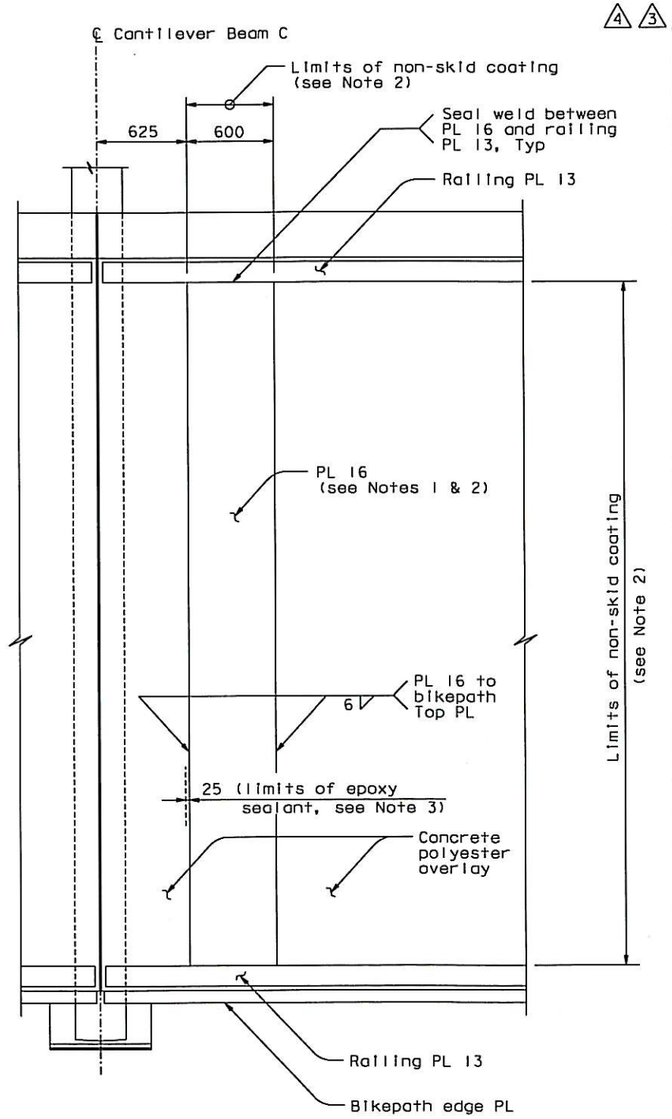

SECTION K-K (Expansion Jt PL Not Shown For Clarity)
1:20

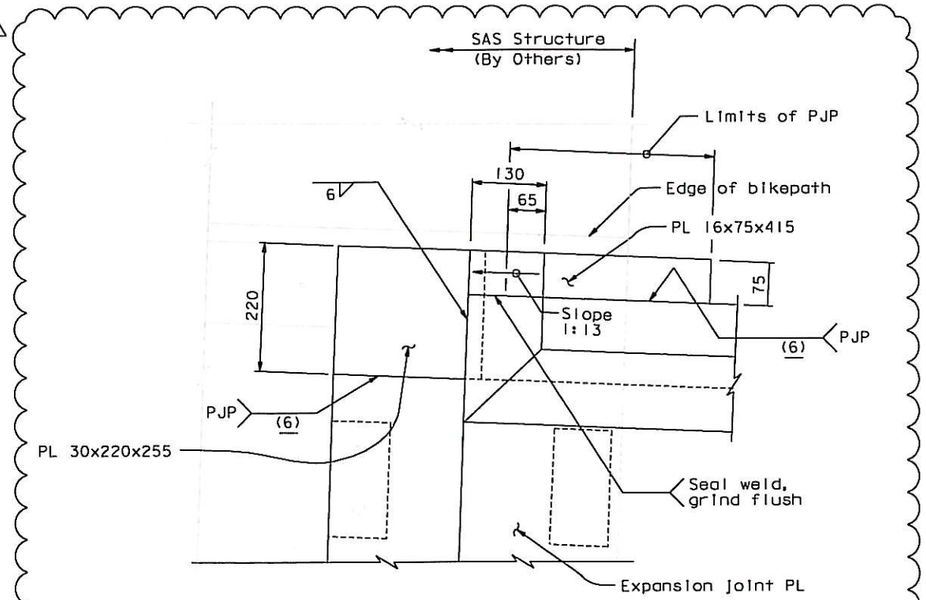

DETAIL N
1:5

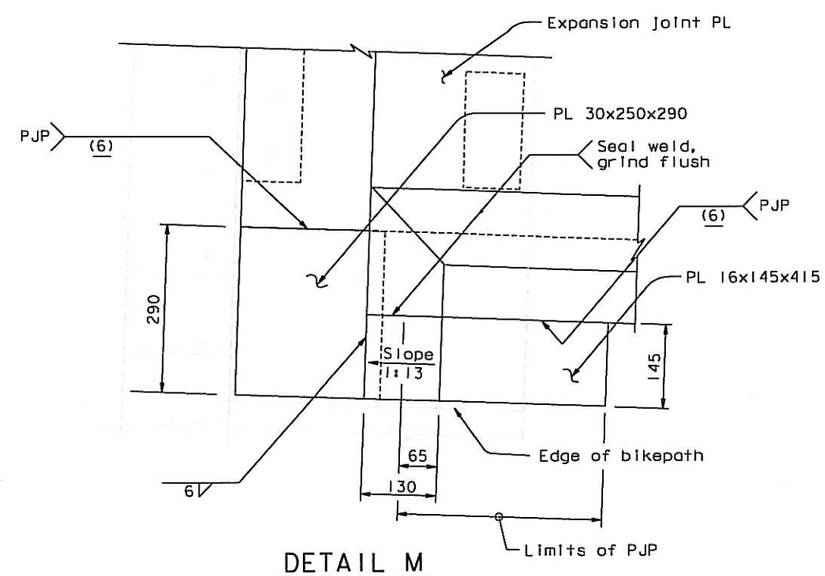

DETAIL M
1:5

NOTES:

1. Remove concrete polyester overlay before placing PL 16. Polyester overlay in the vicinity of PL 16 shall be replaced / repaired as needed.
2. Top surface of PL 16 not covered by expansion joint plate shall have non-skid coating, to be performed by Others.
   The non-skid coating shall match the existing color pattern. Where the tapered edge cover plate extends over the existing white edge of the bikepath panel, white finish paint shall be used in lieu of non-skid.
3. At the Contractor's option, 25 mm of the replaced/repaired concrete polyester overlay may be substituted with epoxy sealant.
4. At the Contractor's option, 1¼" thick plate may be used in lieu of PL 30.
5. At the Contractor's option, ⅝" thick plate may be used in lieu of PL 16.
6. At the Contractor's option, the PL 16 and PL 30 may be ASTM A36 steel.

CONTRACT CHANGE ORDER NO. 217S2
SHEET 5 OF 5

REQUESTS FOR INFORMATION NOT ADDRESSED IN THIS CCO REMAIN IN FORCE

MARK	DATE	DESCRIPTIONS	BY	CH'D	CCO#
4	03/25/14	SKYWAY BIKEPATH HINGE	AB	AS	217S2
3	08/28/13	SKYWAY BIKEPATH HINGE	DT	AS	217S2
2	01/18/13	SKYWAY NON-SKID	JD	AS	217S1
1	10/04/12	SKYWAY NON-SKID	JD	AS	217S1
0	03/13/12	SKYWAY BIKEPATH HINGE	CC	AS	217S1

REVISIONS

R. Vallizadeh/V. Toon/Y. L./W. L./F. C.
DESIGN OVERSIGHT
Roya Vallizadeh / Vong Toon / Y. Liu
SIGN OFF DATE 03/29/13

Rev. Date: 5-18-98

DESIGN	BY C. Choi	CHECKED A. Sanjines	
DETAILS	BY C. Choi	CHECKED A. Sanjines	
QUANTITIES	BY C. Choi	CHECKED A. Sanjines	

PREPARED FOR THE STATE OF CALIFORNIA DEPARTMENT OF TRANSPORTATION

R. Manzanarez
PROJECT ENGINEER

ALL DIMENSIONS ARE IN MILLIMETERS UNLESS OTHERWISE SHOWN

ORIGINAL SCALE IN MILLIMETERS FOR REDUCED PLANS 0 10 20 30 40 50 60 70 80 90 100

BRIDGE NO. 34-0006L/R
KILOMETER POST 13.2/13.9

SAN FRANCISCO OAKLAND BAY BRIDGE
EAST SPAN SEISMIC SAFETY PROJECT
SELF-ANCHORED SUSPENSION BRIDGE
(SUPERSTRUCTURE & TOWER)

SKYWAY BIKEPATH EXPANSION JOINT REPLACEMENT NO. 3A

CU 04
EA 0120F1

DISREGARD PRINTS BEARING EARLIER REVISION DATES → 03/13/12

REVISION DATES (PRELIMINARY STAGE ONLY)

SHEET 74 OF 59AR4

FILE => I:\bb\04-012001\sas\contract plans and cco\cco\cco*217s2\7-revision 03-25-14\dgn\sbjnt03a.dgn

USERNAME => msmith DATE PLOTTED => 25 MAR 2014 TIME PLOTTED => 13:49:58

100 % PS&E