DIST.	COUNTY	ROUTE	KILOMETER POST TOTAL PROJECT	SHEET NO.	TOTAL SHEETS
04	SF	80	12.7/13.2	K679A	806

REGISTERED ENGINEER - CIVIL

PLANS APPROVAL DATE

REGISTERED PROFESSIONAL ENGINEER — A.L. ELY — No. 18880 — Exp. 6-30-13 — CIVIL — STATE OF CALIFORNIA

The State of California or its officers or agents shall not be responsible for the accuracy or completeness of electronic copies of this plan sheet.

T.Y. LIN / MOFFATT & NICHOL
TWO HARRISON STREET
SAN FRANCISCO, CA 94105

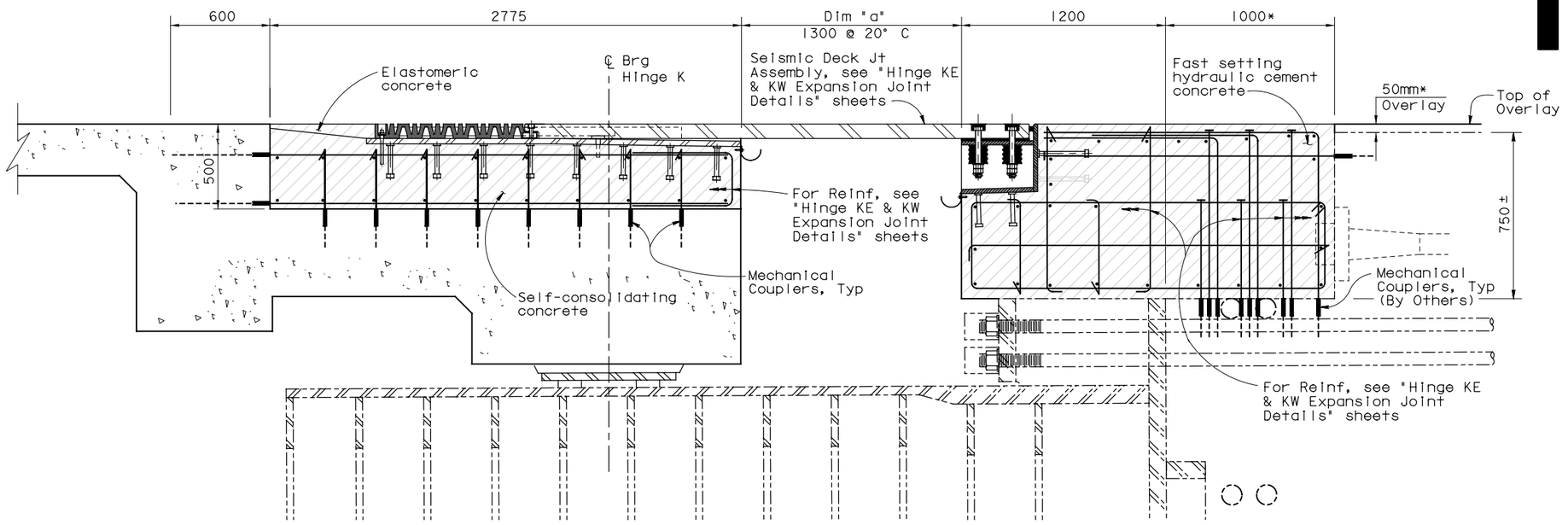

TYPICAL SECTION AT EXPANSION JOINT

1:15

Expansion Joint Information Movement Rating (MR): 280 mm	
Air Temperature (T)	Dimension "a" (mm)
5° C	1350
10° C	1333
15° C	1317
20° C	1300
25° C	1284
30° C	1267
35° C	1251

Indicates concrete placed when deck joint installed

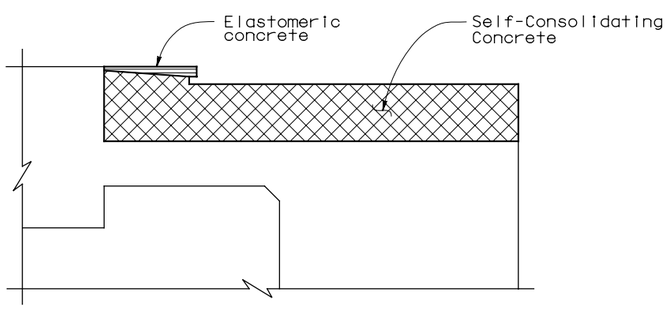

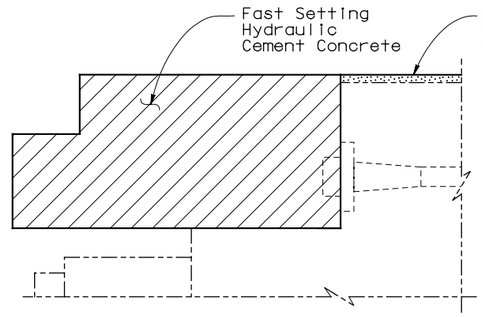

Fast Setting Hydraulic Cement Concrete (f'_{ci} = 14 MPa @ 3 hours, f'_c = 35 MPa @ 56 days)

Self-Consolidating Concrete (SCC) Bridge (f'_c = 35 MPa @ 56 days)

Overlay

Elastomeric Concrete (see Note 1)

NOTES:

1. At the Contractor's option, Watson Bowman's WaboCrete II Elastomeric Concrete may be used, subject to review and approval of the Engineer.

CONCRETE STRENGTH AND TYPE LIMITS

SUPPLEMENTAL SHEET

CONTRACT CHANGE ORDER NO. ____
SHEET ____ OF ____

ALL DIMENSIONS ARE IN MILLIMETERS UNLESS OTHERWISE SHOWN

DESIGN OVERSIGHT

SIGN OFF DATE

DESIGN	BY Lee	CHECKED Wang
DETAILS	BY van Ryn/Zucchi/Mai	CHECKED Jain
QUANTITIES	BY Liao	CHECKED E. Nichol

PREPARED FOR THE STATE OF CALIFORNIA DEPARTMENT OF TRANSPORTATION

Jal Birdy
PROJECT ENGINEER

BRIDGE NO. 34-0006L/R
KILOMETER POST 12.8

CU 04
EA 0120F1

SAN FRANCISCO OAKLAND BAY BRIDGE
EAST SPAN SEISMIC SAFETY PROJECT

YBI TRANSITION STRUCTURES - HINGE K

HINGE K CLOSURE DETAILS NO. 13

Rev. Date: 5-18-98

ORIGINAL SCALE IN MILLIMETERS FOR REDUCED PLANS 0 10 20 30 40 50 60 70 80 90 100

DISREGARD PRINTS BEARING EARLIER REVISION DATES →

REVISION DATES (PRELIMINARY STAGE ONLY)

SHEET K130A OF 209

FILE => P:\4141-06\CADD\TS\Checked Plans\YBITS #1-100% No. 2_03-03-08 (Final Renamed)\121911 Hinge K SAS T19 CCO\04-0120f1-34-006r1

Dec 19, 2011

TIME PLOTTED => 3:28:54 PM
DATE PLOTTED => 12/19/2011
USERNAME => FSamson

DIST.	COUNTY	ROUTE	KILOMETER POST TOTAL PROJECT	SHEET NO.	TOTAL SHEETS
04	SF	80	12.7/13.2	K680A	806

REGISTERED ENGINEER - CIVIL

PLANS APPROVAL DATE

REGISTERED PROFESSIONAL ENGINEER — A.L. ELY — No. 18880 — Exp. 6-30-13 — CIVIL — STATE OF CALIFORNIA

The State of California or its officers or agents shall not be responsible for the accuracy or completeness of electronic copies of this plan sheet.

T.Y. LIN / MOFFATT & NICHOL
TWO HARRISON STREET
SAN FRANCISCO, CA 94105

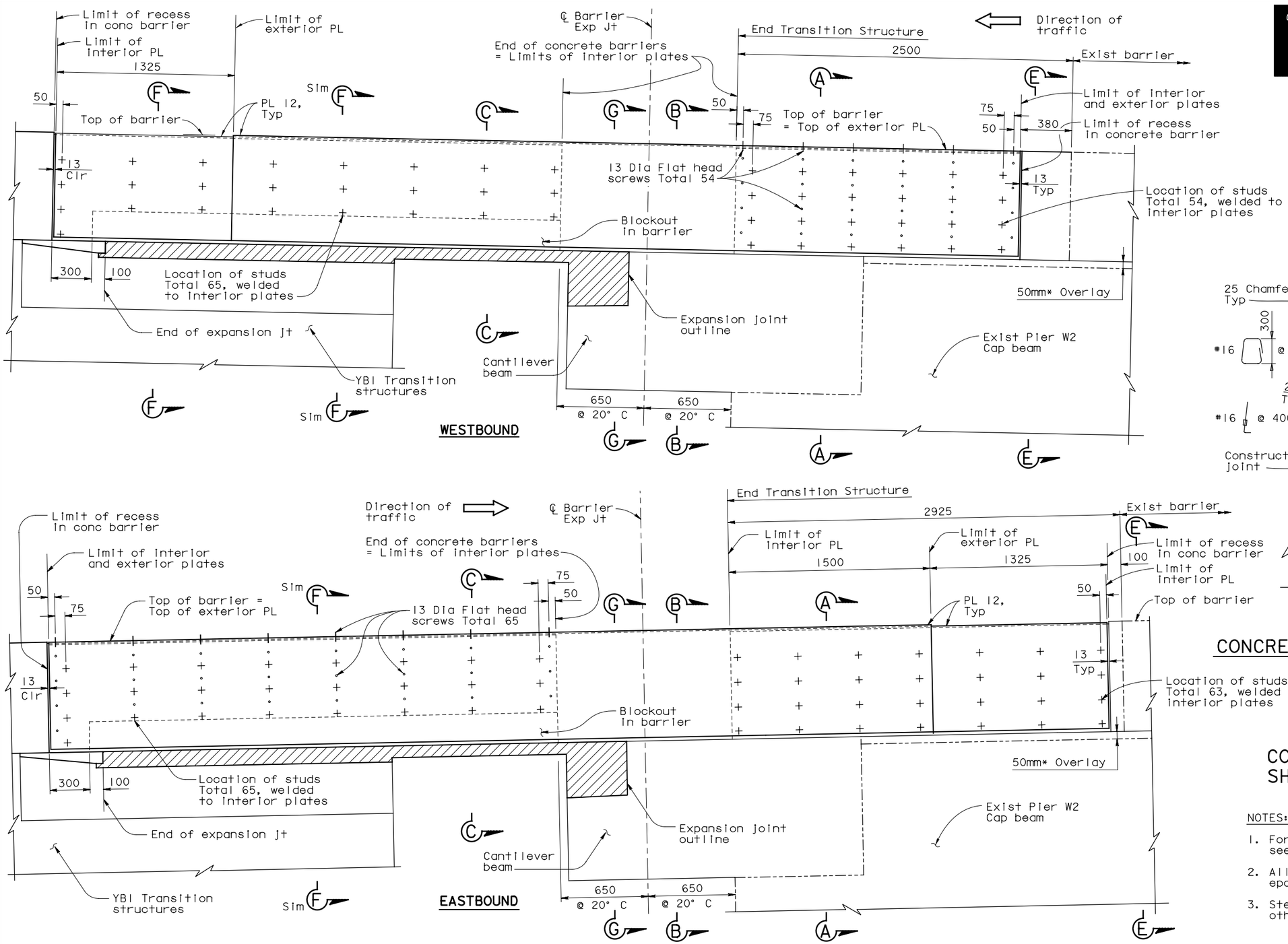

BARRIER AT HINGE K - ELEVATION

1:15

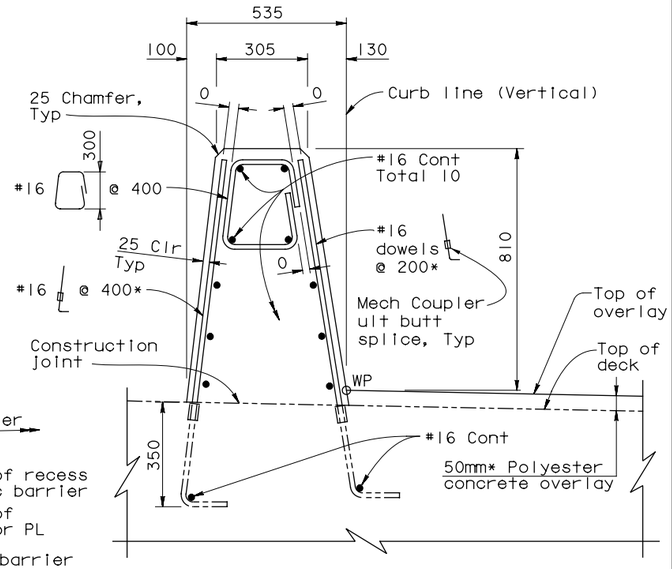

SECTION E-E

CONCRETE BARRIER TYPE 732 (MODIFIED)

For Pier W2 Cap beam only
1:10

SUPPLEMENTAL SHEET

CONTRACT CHANGE ORDER NO. ____
SHEET ___ OF ___

NOTES:

1. For Sections A-A, B-B, C-C, F-F and G-G, see "Hinge K Closure Details No.15" sheet.
2. All reinforcement in concrete barrier shall be epoxy coated.
3. Steel barrier cover plates to be furnished by others and installed by Contractor.

ALL DIMENSIONS ARE IN MILLIMETERS UNLESS OTHERWISE SHOWN

DESIGN OVERSIGHT

SIGN OFF DATE

	BY	CHECKED
DESIGN	Lee	Wang
DETAILS	van Ryn/Zucchi/Mai	Jain
QUANTITIES	Liao	E. Nichol

PREPARED FOR THE STATE OF CALIFORNIA DEPARTMENT OF TRANSPORTATION

Jal Birdy
PROJECT ENGINEER

CU 04
EA 0120F1

BRIDGE NO. 34-0006L/R
KILOMETER POST 12.8

SAN FRANCISCO OAKLAND BAY BRIDGE EAST SPAN SEISMIC SAFETY PROJECT

YBI TRANSITION STRUCTURES - HINGE K

HINGE K CLOSURE DETAILS NO. 14

Rev. Date: 5-18-98

ORIGINAL SCALE IN MILLIMETERS FOR REDUCED PLANS 0 10 20 30 40 50 60 70 80 90 100

DISREGARD PRINTS BEARING EARLIER REVISION DATES →

REVISION DATES (PRELIMINARY STAGE ONLY)

SHEET K131A OF 209

FILE => P:\4141-06\CADD\TS\Checked Plans\YBITS #1-100% No. 2_03-08 (FInal Renamed)\121911 HInge K SAS T19 CCO\04-0120f1-34-0006r

Dec 19, 2011

TIME PLOTTED => 3:29:05 PM
DATE PLOTTED => 12/19/2011
USERNAME => FSamson

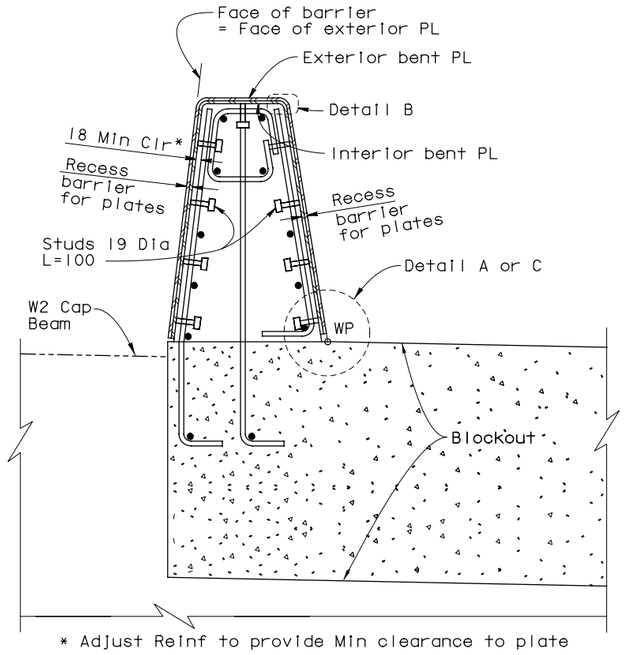

* Adjust Reinf to provide Min clearance to plate

SECTION A-A
1:10

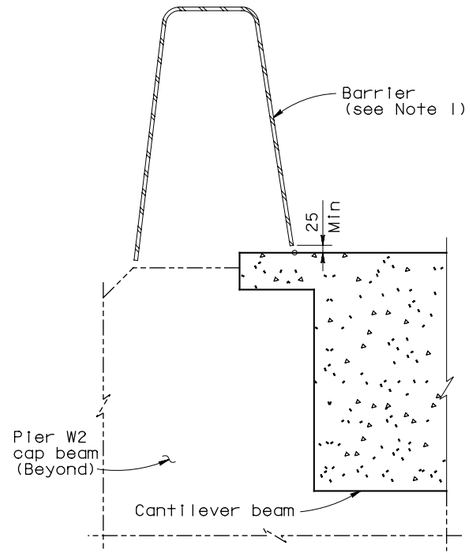

SECTION B-B
1:10

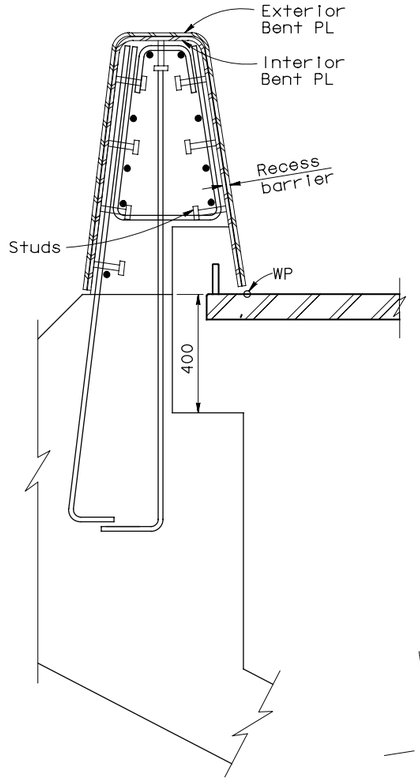

SECTION C-C
1:10

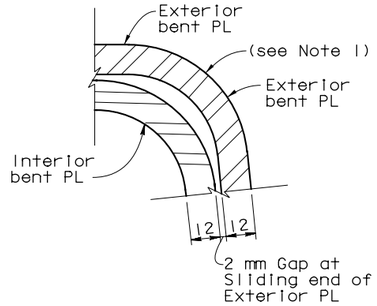

DETAIL B
NTS

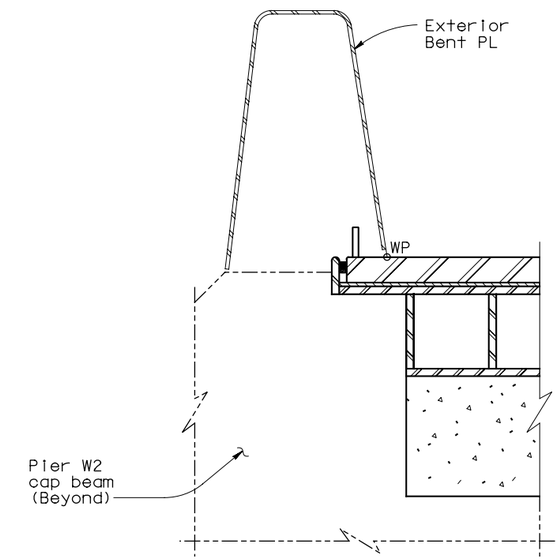

SECTION F-F
1:10

SECTION G-G
1:10

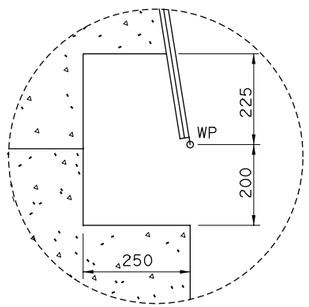

TYPICAL BARRIER BLOCKOUT
NTS

DETAIL TYPICAL AT FIXED END OF EXTERIOR PL
DETAIL A
NTS

DETAIL TYPICAL AT SLIDING END OF EXTERIOR PL
DETAIL C
NTS

NOTES:

1. Bend steel plates to conform to shape of concrete barrier.
2. Galvanize all metal hardware after fabrication.
3. Steel barrier cover plates to be furnished by others and installed by Contractor.

SUPPLEMENTAL SHEET

CONTRACT CHANGE ORDER NO. _____
SHEET ____ OF ____

ALL DIMENSIONS ARE IN MILLIMETERS UNLESS OTHERWISE SHOWN

DIST.	COUNTY	ROUTE	KILOMETER POST TOTAL PROJECT	SHEET NO.	TOTAL SHEETS
04	SF	80	12.7/13.2	K681A	806

REGISTERED ENGINEER - CIVIL
PLANS APPROVAL DATE
REGISTERED PROFESSIONAL ENGINEER — A.L. ELY — No. 18880 — Exp. 6-30-13 — CIVIL — STATE OF CALIFORNIA

The State of California or its officers or agents shall not be responsible for the accuracy or completeness of electronic copies of this plan sheet.

T.Y. LIN / MOFFATT & NICHOL
TWO HARRISON STREET
SAN FRANCISCO, CA 94105

DESIGN OVERSIGHT	DESIGN	BY Lee	CHECKED Wang
SIGN OFF DATE	DETAILS	BY van Ryn/Zucchi/Mal	CHECKED Jain
Rev. Date: 5-18-98	QUANTITIES	BY Liao	CHECKED E. Nichol

PREPARED FOR THE STATE OF CALIFORNIA DEPARTMENT OF TRANSPORTATION

J. Birdy
PROJECT ENGINEER

CU 04
EA 0120F1

BRIDGE NO. 34-0006L/R
KILOMETER POST 12.8

SAN FRANCISCO OAKLAND BAY BRIDGE EAST SPAN SEISMIC SAFETY PROJECT

YBI TRANSITION STRUCTURES - HINGE K

HINGE K CLOSURE DETAILS NO. 15

ORIGINAL SCALE IN MILLIMETERS FOR REDUCED PLANS 0 10 20 30 40 50 60 70 80 90 100

DISREGARD PRINTS BEARING EARLIER REVISION DATES →

REVISION DATES (PRELIMINARY STAGE ONLY)

SHEET K132A OF 209

FILE => P:\4141-06\CADD\TS\Checked Plans\YBITS #1-100% No. 2_03-08 (Final Renamed)\121911 Hinge K SAS T19 CCO\04-0120f1-34-006r1

Dec 19, 2011

TIME PLOTTED => 3:29:14 PM
DATE PLOTTED => 12/19/2011
USERNAME => FSamson

DIST.	COUNTY	ROUTE	KILOMETER POST TOTAL PROJECT	SHEET NO.	TOTAL SHEETS
04	SF	80	12.7/13.2	K697A	806

Caltrans Metric

REGISTERED ENGINEER - CIVIL

PLANS APPROVAL DATE

The State of California or its officers or agents shall not be responsible for the accuracy or completeness of electronic copies of this plan sheet.

REGISTERED PROFESSIONAL ENGINEER Marwan N. Nader No. C 054426 Exp. 12/31/13 CIVIL STATE OF CALIFORNIA

T.Y. LIN / MOFFATT & NICHOL
TWO HARRISON STREET
SAN FRANCISCO, CA 94105

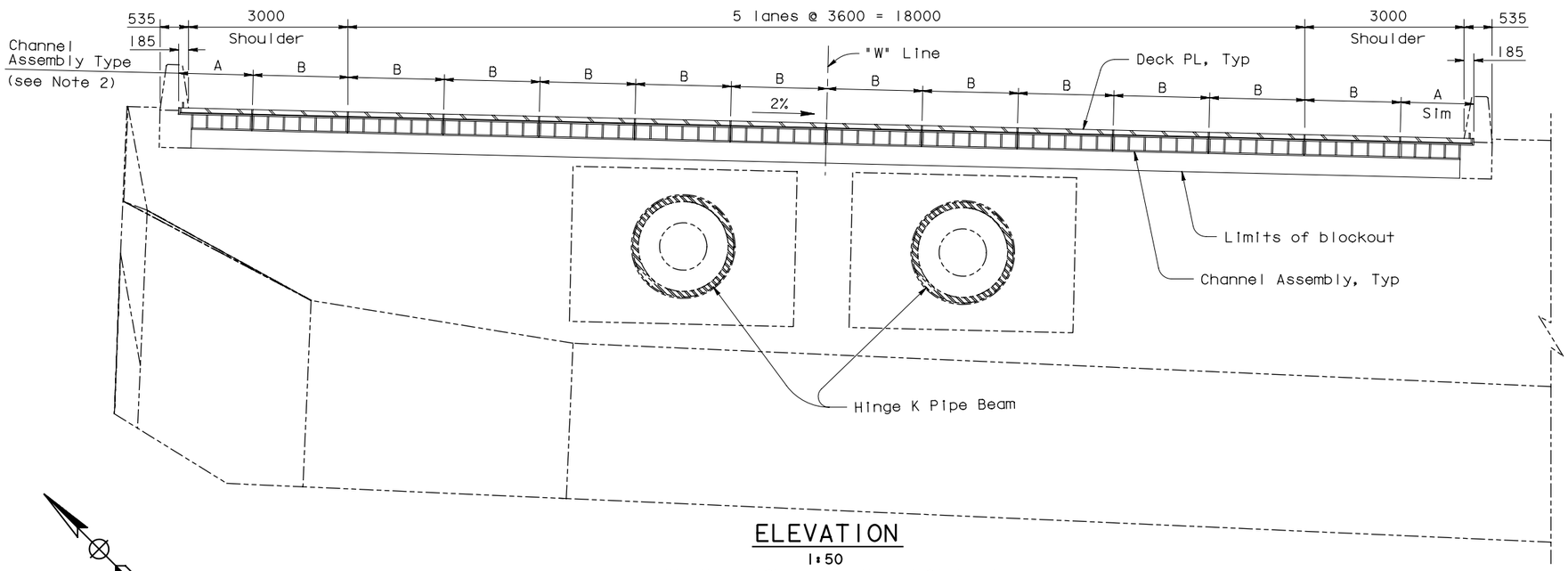

ELEVATION

1:50

(Westbound Shown, Eastbound Similar)
(Elevation View Looking East)

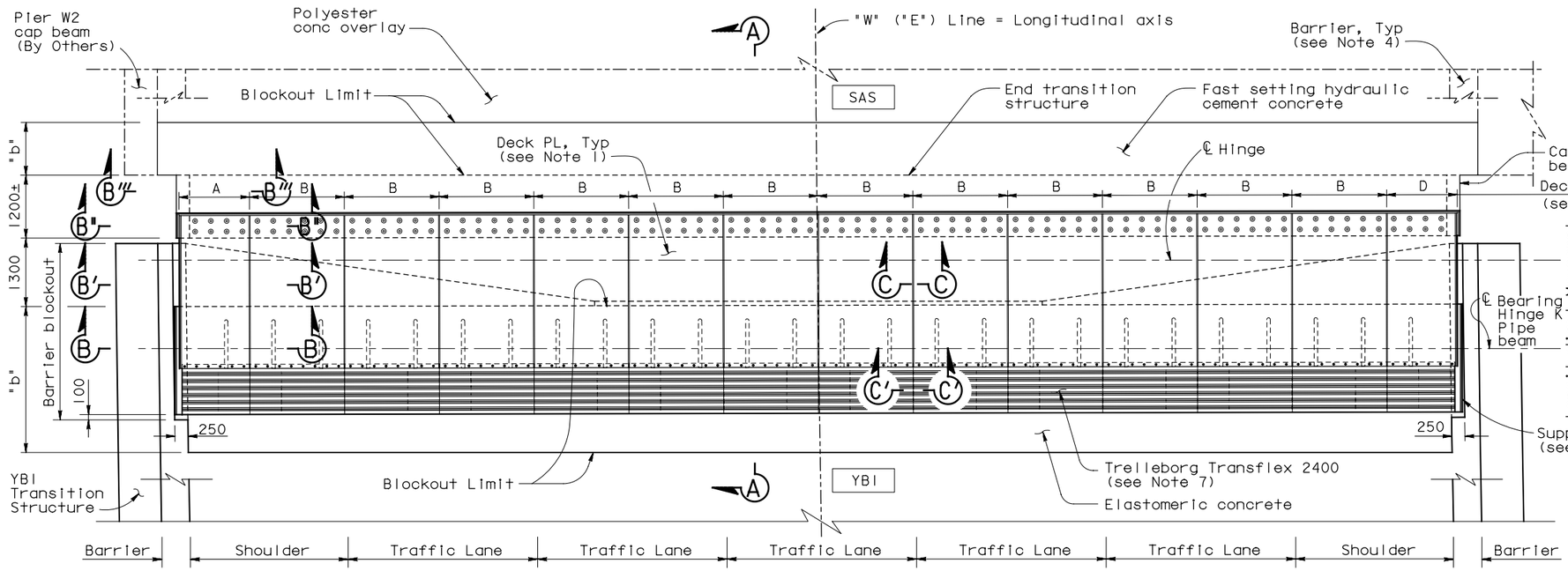

PLAN-EXPANSION JOINT

1:50

(Westbound Shown, Eastbound Similar)

Note: Hinge KE & KW Expansion Joints to be furnished by others and installed by the Contractor.

NOTES:

1. For Deck Plates A, B and D, see "Hinge KE & KW Expansion Joint Details No.3" sheet.
2. Deck Plate A and D matches with Support Plate A and the Channel Assembly A (Module A). Deck Plate B matches with Support Plate B and the Channel Assembly B (Module B). For details, see "Hinge KE & KW Expansion Joint Details No.3" and "Hinge KE & KW Expansion Joint Details No.5" sheets.
3. One module "B" is placed per half traffic lane.
4. Portions of barriers are not shown for clarity. For barrier details at expansion joint, see "Hinge K Closure Details No.14" sheet.
5. For Section A-A, see "Hinge KE & KW Expansion Joint Details No.2" sheet.
6. For Sections B-B, B'-B', B''-B'', B'''-B''', C-C and C'-C', see "Hinge KE & KW Expansion Joint Details No.3" sheet.
7. The expansion joint shall be 1800 wide Transflex 2400 module with movement rating of 600. The joint between the Transflex modules shall be water tight.
8. For General Notes, see "General Notes" sheets.

SUPPLEMENTAL SHEET

CONTRACT CHANGE ORDER NO. _____
SHEET ____ OF ____

ALL DIMENSIONS ARE IN MILLIMETERS UNLESS OTHERWISE SHOWN

SAN FRANCISCO OAKLAND BAY BRIDGE
EAST SPAN SEISMIC SAFETY PROJECT

YBI TRANSITION STRUCTURES - HINGE K

HINGE KE & KW EXPANSION JOINT DETAILS NO.1

DESIGN	BY C. Redfield	CHECKED M. Nader	
DETAILS	BY H. Patel	CHECKED J. Duxbury	
QUANTITIES	BY H. Patel	CHECKED J. Duxbury	

DESIGN OVERSIGHT

SIGN OFF DATE

Rev. Date: 5-18-98

PREPARED FOR THE STATE OF CALIFORNIA DEPARTMENT OF TRANSPORTATION

Jal Birdy
PROJECT ENGINEER

BRIDGE NO. 34-0006 L/R
KILOMETER POST 12.8

ORIGINAL SCALE IN MILLIMETERS FOR REDUCED PLANS 0 10 20 30 40 50 60 70 80 90 100

CU 04
EA 0120F1

DISREGARD PRINTS BEARING EARLIER REVISION DATES

REVISION DATES (PRELIMINARY STAGE ONLY)

SHEET K148A OF 209

Dec 19, 2011

USERNAME => FSamson DATE PLOTTED => 12/19/2011 TIME PLOTTED => 3:29:24 PM

FILE => P:\4141-06\CADD\TS\Checked Plans\YBITS #1-100% No. 2_03-03-08 (Final Renamed)\121911 Hinge K SAS T19 CCO\04-0120f1-34-006r

DIST.	COUNTY	ROUTE	KILOMETER POST TOTAL PROJECT	SHEET NO.	TOTAL SHEETS
04	SF	80	12.7/13.2	K698A	806

REGISTERED ENGINEER - CIVIL

PLANS APPROVAL DATE

REGISTERED PROFESSIONAL ENGINEER — Marwan N. Nader — No. C 054426 — Exp. 12/31/13 — CIVIL — STATE OF CALIFORNIA

The State of California or its officers or agents shall not be responsible for the accuracy or completeness of electronic copies of this plan sheet.

T.Y. LIN / MOFFATT & NICHOL
TWO HARRISON STREET
SAN FRANCISCO, CA 94105

Note: Hinge KE & KW Expansion Joints to be furnished by others and installed by the Contractor.

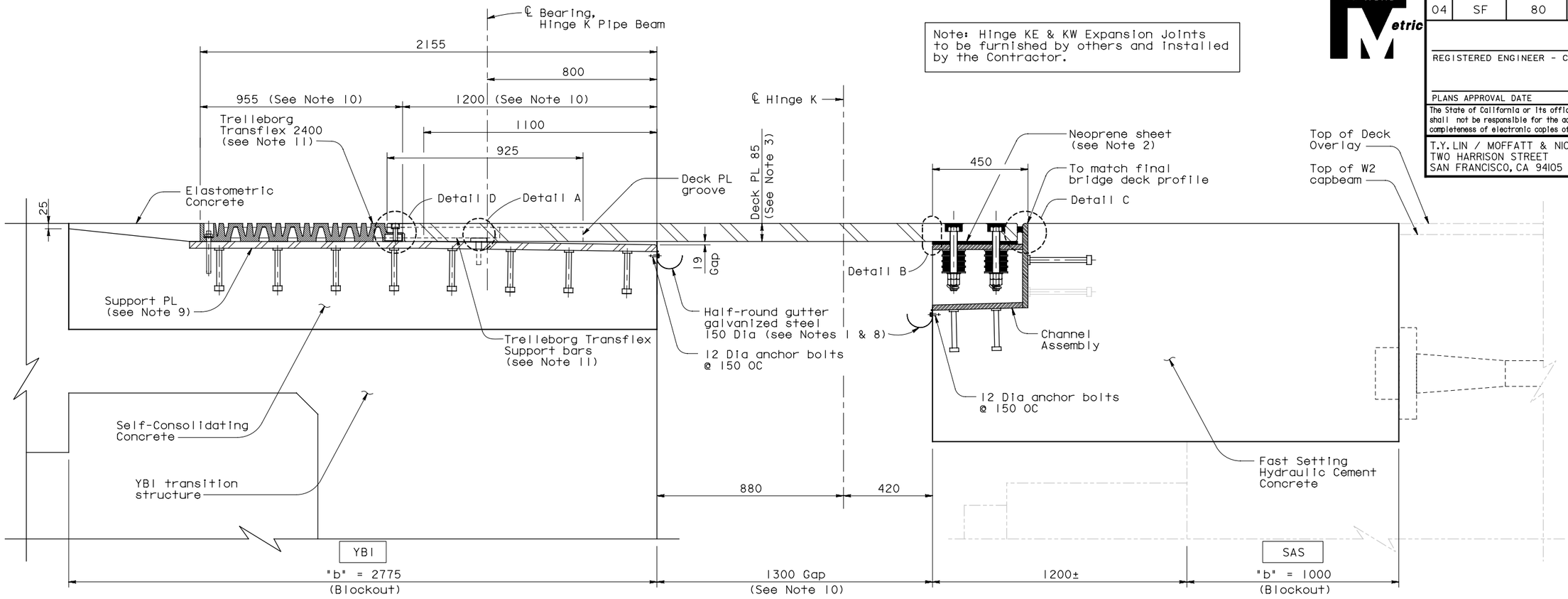

SECTION A-A
1:10

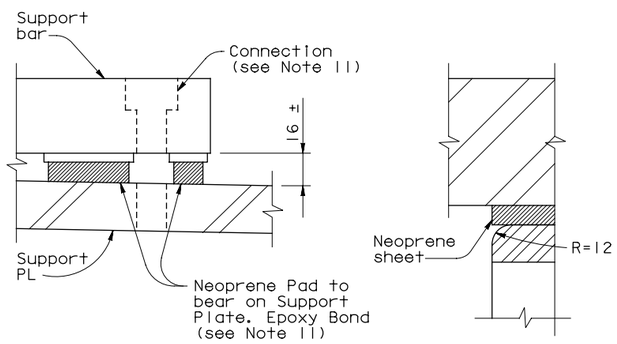

DETAIL A
1:2

DETAIL B
1:2

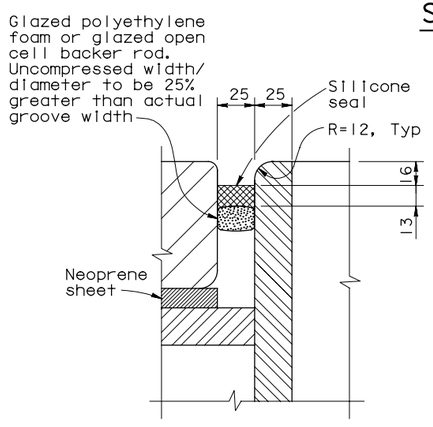

DETAIL C
1:2

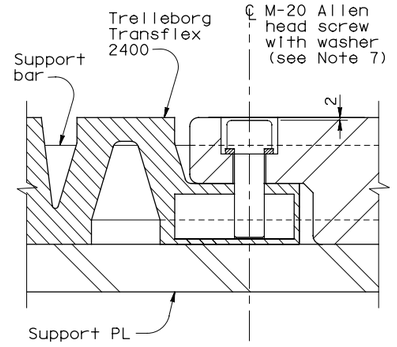

DETAIL D
1:2

NOTES:

1. Use caulking or sealant between gutter and concrete.
2. 40 mm holes in neoprene sheets shall be drilled or punched so that the neoprene is not distorted at the time of installation. See "Hinge KE & KW Expansion Joint Details No.6" sheet.
3. For deck plate layout and details, see "Hinge KE & KW Expansion Joint Details No.1" sheet. For deck plate friction groove pattern, see "Hinge KE & KW Expansion Joint Details No.4" sheet.
4. For mild steel reinforcement in blockout areas, see "Hinge KE & KW Expansion Joint Details No.8" sheet.
5. For channel assembly details, see "Hinge KE & KW Expansion Joint Details No.5" and "Hinge KE & KW Expansion Joint Details No.6" sheets.
6. Place deck plate, support plate and channel assembly so that full bearing is achieved between 1) deck plate and channel assembly and 11) deck plate and support plates as shown in Section A-A.
7. M-20 Allen head screw shall be stainless steel.
8. Gutter shall be placed 75 mm minimum clear from the deck plate and shall be parallel to deck cross slope.
9. For support plate details see "Hinge KE & KW Expansion Joint Details No.7" sheet.
10. Values are for mean temperature of 20°C.
11. All the connection hardware shall be supplied with Trelleborg Transflex 2400. The connection of Transflex 2400 and that of the support bar to the blockout concrete shall be drill and bond dowels.

SUPPLEMENTAL SHEET

CONTRACT CHANGE ORDER NO. ____
SHEET ___ OF ___

ALL DIMENSIONS ARE IN MILLIMETERS UNLESS OTHERWISE SHOWN

SAN FRANCISCO OAKLAND BAY BRIDGE
EAST SPAN SEISMIC SAFETY PROJECT

YBI TRANSITION STRUCTURES - HINGE K

HINGE KE & KW EXPANSION JOINT DETAILS NO.2

DESIGN OVERSIGHT			PREPARED FOR THE STATE OF CALIFORNIA DEPARTMENT OF TRANSPORTATION	Jal Birdy, PROJECT ENGINEER
SIGN OFF DATE				
DESIGN	BY C. Redfield	CHECKED M. Nader		
DETAILS	BY H. Patel	CHECKED J. Duxbury		
QUANTITIES	BY H. Patel	CHECKED J. Duxbury		

BRIDGE NO. 34-0006 L/R
KILOMETER POST 12.8

Rev. Date: 5-18-98

ORIGINAL SCALE IN MILLIMETERS FOR REDUCED PLANS 0 10 20 30 40 50 60 70 80 90 100

CU 04
EA 0120F1

DISREGARD PRINTS BEARING EARLIER REVISION DATES →

REVISION DATES (PRELIMINARY STAGE ONLY)

SHEET K149A OF 209

FILE => P:\4141-06\CADD\TS\Checked Plans\YBITS #1-100% No. 2_03-03-08 (Final Renamed)\121911 Hinge K SAS T19 CCO\04-0120f1-34-006r

Dec 19, 2011

USERNAME => FSamson DATE PLOTTED => 12/19/2011 TIME PLOTTED => 3:29:36 PM

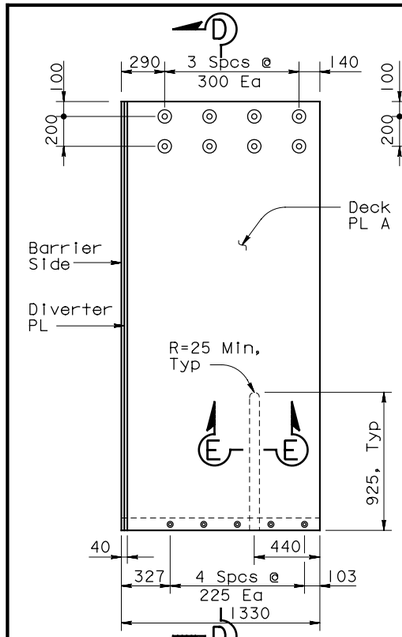

DECK PLATE A
1:20

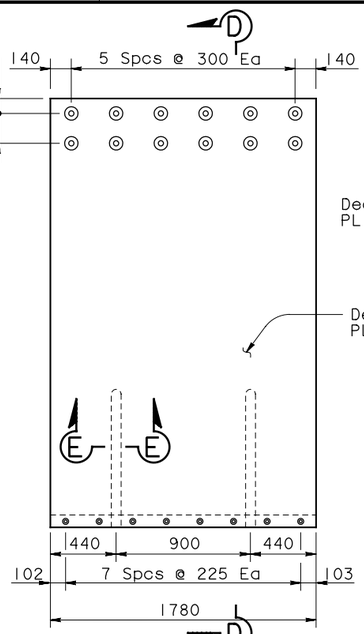

DECK PLATE B
1:20

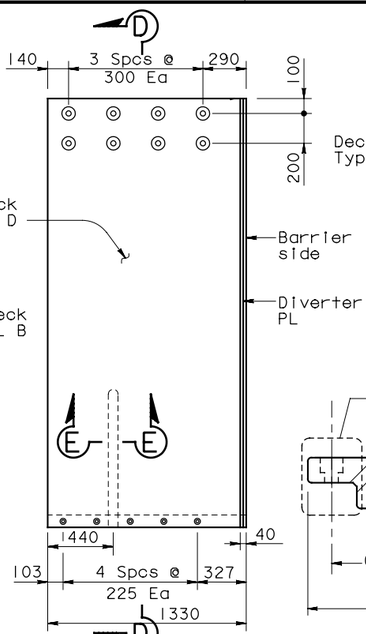

DECK PLATE D
1:20

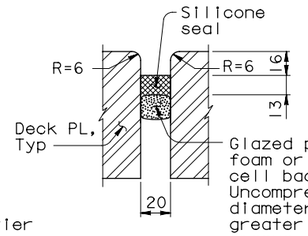

SECTION C-C
1:20

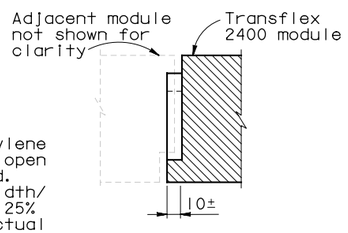

SECTION C'-C'
1:20

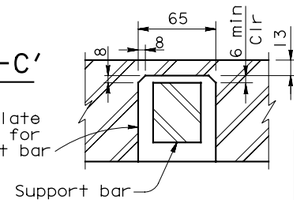

SECTION E-E
1:2.5

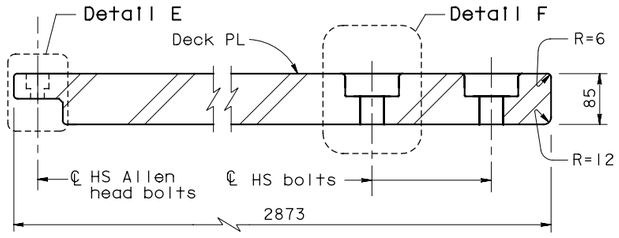

SECTION D-D
1:5

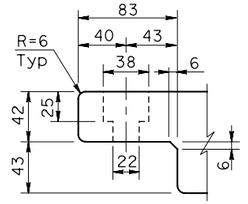

DETAIL E
1:2.5

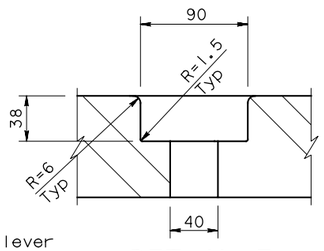

DETAIL F
1:2.5

SECTION B-B
1:10

SECTION B'-B'
1:10

SECTION B''-B''
1:10

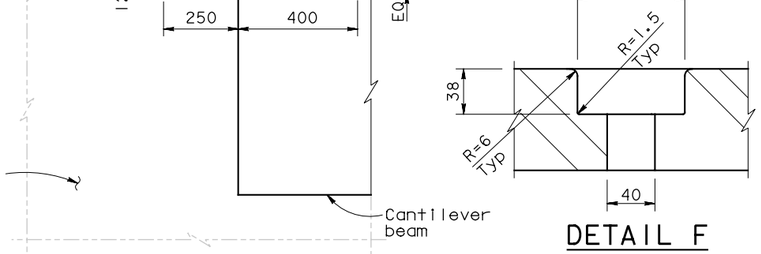

SECTION B'''-B'''
1:10

Note: Hinge KE & KW Expansion Joints to be furnished by others and installed by the Contractor.

NOTES:

1. For deck plate plan see "Hinge KE & KW Expansion Joint Details No.1" sheet.
2. Diverter plate applies to Deck plates A and D and Support plate A only.
3. For bolting of deck plates to channel assembly details, see "Hinge KE & KW Expansion Joint Details No.6" sheet.
4. For connection detail between Trelleborg Transflex 2400 and deck plate see, "Hinge KE & KW Expansion Joint Details No.2" sheet.
5. For Detail L, see "Hinge KE & KW Expansion Joint Details No.6" sheet.
6. For barrier details, see "Hinge K Closure Details No.14" sheet.
7. Minimum clearance of 40 mm shall be provided between the cantilever at SAS blockout and interior face of YBI edge girder to ensure free seismic closing movement.

SUPPLEMENTAL SHEET

CONTRACT CHANGE ORDER NO. _____
SHEET ____ OF ____

ALL DIMENSIONS ARE IN MILLIMETERS UNLESS OTHERWISE SHOWN

DIST.	COUNTY	ROUTE	KILOMETER POST TOTAL PROJECT	SHEET NO.	TOTAL SHEETS
04	SF	80	12.7/13.2	K699A	806

REGISTERED ENGINEER - CIVIL
PLANS APPROVAL DATE
The State of California or its officers or agents shall not be responsible for the accuracy or completeness of electronic copies of this plan sheet.

REGISTERED PROFESSIONAL ENGINEER — Marwan N. Nader, No. C 054426, Exp. 12/31/13, CIVIL, STATE OF CALIFORNIA

T.Y. LIN / MOFFATT & NICHOL
TWO HARRISON STREET
SAN FRANCISCO, CA 94105

SAN FRANCISCO OAKLAND BAY BRIDGE
EAST SPAN SEISMIC SAFETY PROJECT

YBI TRANSITION STRUCTURES - HINGE K

HINGE KE & KW EXPANSION JOINT DETAILS NO.3

DESIGN OVERSIGHT			
SIGN OFF DATE			
DESIGN	BY C. Redfield	CHECKED M. Nader	
DETAILS	BY H. Patel	CHECKED J. Duxbury	
QUANTITIES	BY H. Patel	CHECKED J. Duxbury	

PREPARED FOR THE STATE OF CALIFORNIA DEPARTMENT OF TRANSPORTATION

Jal Birdy
PROJECT ENGINEER

BRIDGE NO. 34-0006 L/R
KILOMETER POST 12.8

CU 04
EA 0120F1

Rev. Date: 5-18-98

ORIGINAL SCALE IN MILLIMETERS FOR REDUCED PLANS 0 10 20 30 40 50 60 70 80 90 100

DISREGARD PRINTS BEARING EARLIER REVISION DATES →

REVISION DATES (PRELIMINARY STAGE ONLY)

SHEET K150A OF 209

Dec 19, 2011

USERNAME => FSamson DATE PLOTTED => 12/19/2011 TIME PLOTTED => 3:29:46 PM

FILE => P:\4141-06\CADD\TS\Checked Plans\YBITS #1-100% No. 2_03-03-08 (Final Renamed)\121911 Hinge K SAS T19 CCO\04-0120f1-34-006r1

DIST	COUNTY	ROUTE	KILOMETER POST TOTAL PROJECT	SHEET No	TOTAL SHEETS
04	SF	80	12.7/13.2	K700A	806

REGISTERED CIVIL ENGINEER DATE

PLANS APPROVAL DATE

REGISTERED PROFESSIONAL ENGINEER — Enrico G. Maggenti — No. 46920 — Exp. 6/30/13 — CIVIL — STATE OF CALIFORNIA

The State of California or its officers or agents shall not be responsible for the accuracy or completeness of electronic copies of this plan sheet.

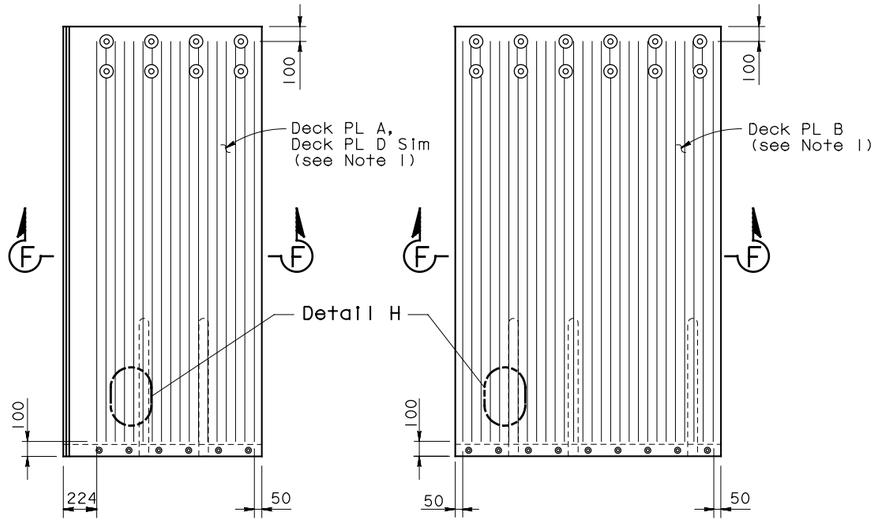

DECK PLATE A/D

(Deck PL A Shown, Deck PL D Similar)

DECK PLATE B

FRICTION PATTERN (See Note 2)

1:20

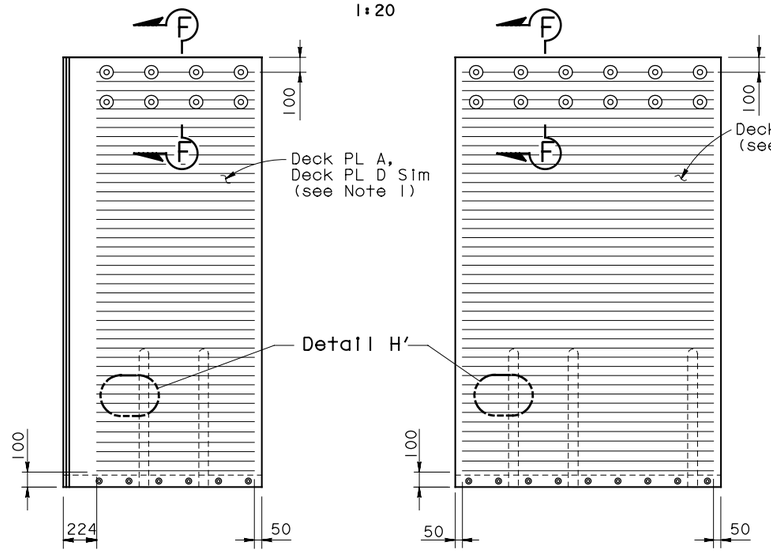

DECK PLATE A/D

(Deck PL A Shown, Deck PL D Similar)

DECK PLATE B

ALT FRICTION PATTERN (See Note 2)

1:20

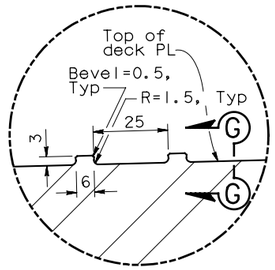

DETAIL G

1:1

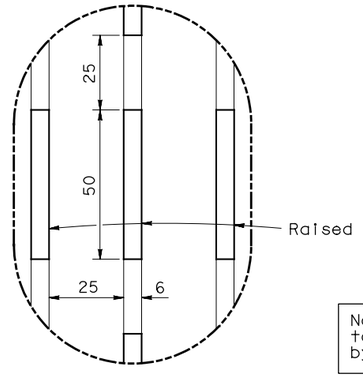

DETAIL H

1:1

Note: Hinge KE & KW Expansion Joints to be furnished by others and installed by the Contractor.

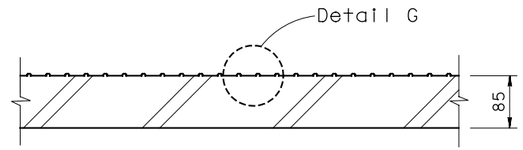

SECTION F-F

1:5

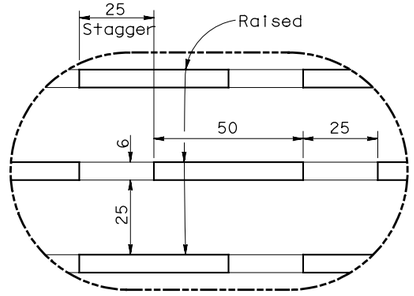

DETAIL H'

1:1

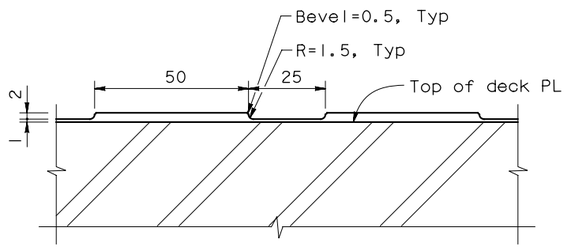

SECTION G-G

1:1

NOTES:

1. For Details not shown, see "Hinge KE & KW Expansion Joint Details No.3" sheet.
2. Friction pattern type shall be selected as directed by the Engineer. Polymer/Aggregate Skid Coat (PASC) may be applied per Engineer's direction.

SUPPLEMENTAL SHEET

CONTRACT CHANGE ORDER NO. _____

SHEET ___ OF ___

Dec 19, 2011

DATE PLOTTED => 12/19/2011
TIME PLOTTED => 3:29:57 PM

MARK	DATE	DESCRIPTIONS	BY	CH'D	CCO#
		REVISIONS			

ALL DIMENSIONS ARE IN MILLIMETERS UNLESS OTHERWISE SHOWN

ORIGINAL SCALE IN MILLIMETERS FOR REDUCED PLANS 0 10 20 30 40 50 60 70 80 90 100

DESIGN	BY R MAGGENTI	CHECKED M WHITESIDE	
DETAILS	BY R MAGGENTI	CHECKED M WHITESIDE	
QUANTITIES	BY R MAGGENTI	CHECKED M WHITESIDE	

STATE OF CALIFORNIA
DEPARTMENT OF TRANSPORTATION

DIVISION OF ENGINEERING SERVICES
STRUCTURE DESIGN
SPECIAL DESIGNS BRANCH

CU 04
EA 0120F1

SAN FRANCISCO OAKLAND BAY BRIDGE
EAST SPAN SEISMIC SAFETY PROJECT

YBI TRANSITION STRUCTURES - HINGE K

SEISMIC JOINT (TYPE II)

HINGE KE & KW EXPANSION JOINT DETAILS NO.4

BRIDGE NO.	34-0006 L/R
KILOMETER POST	12.8

DISREGARD PRINTS BEARING EARLIER REVISION DATES →

REVISION DATES

SHEET K151A OF 209

FILE => spec_des_br_proj/04-0120S1/2007sd/P:\4141-06\CADD\TS\Checked Plans\YBITS #1-100% No. 2_03-03-08 (Final Renamed)\121911 H

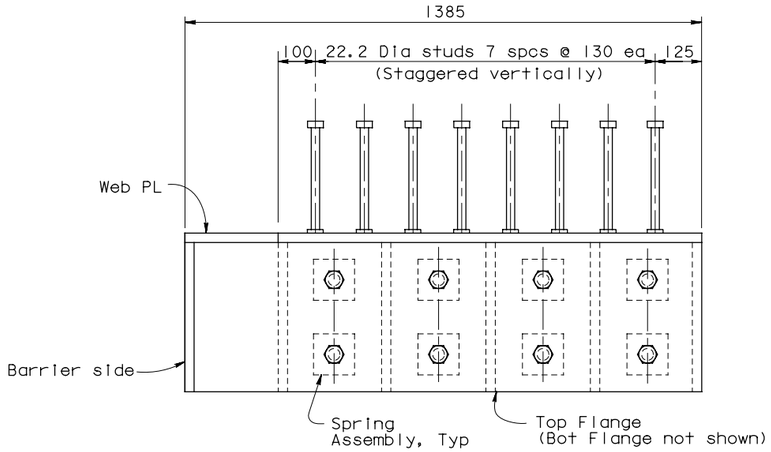

PLAN - BUILT UP CHANNEL ASSEMBLY "A"

NTS

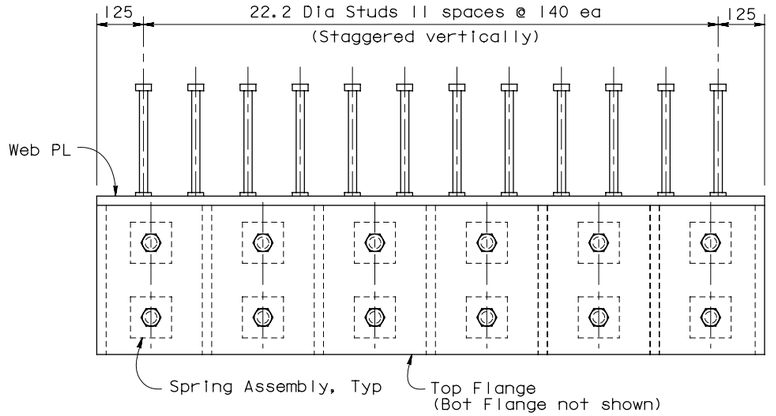

PLAN - BUILT UP CHANNEL ASSEMBLY "B"

NTS

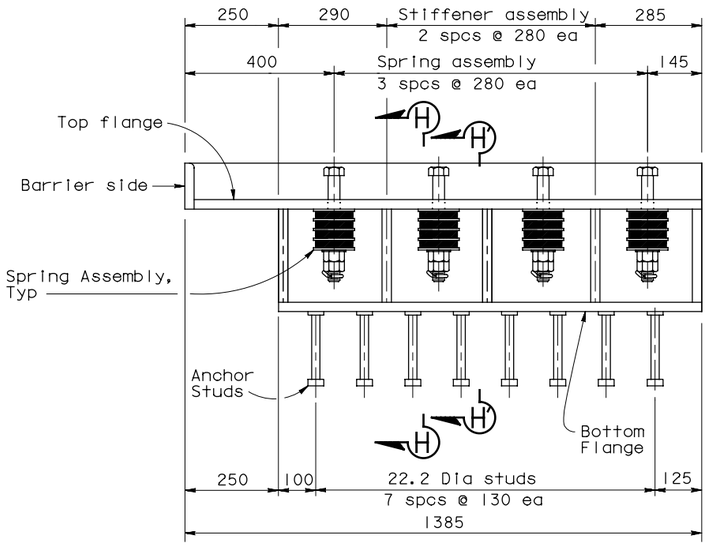

ELEVATION - BUILT UP CHANNEL ASSEMBLY "A"

NTS

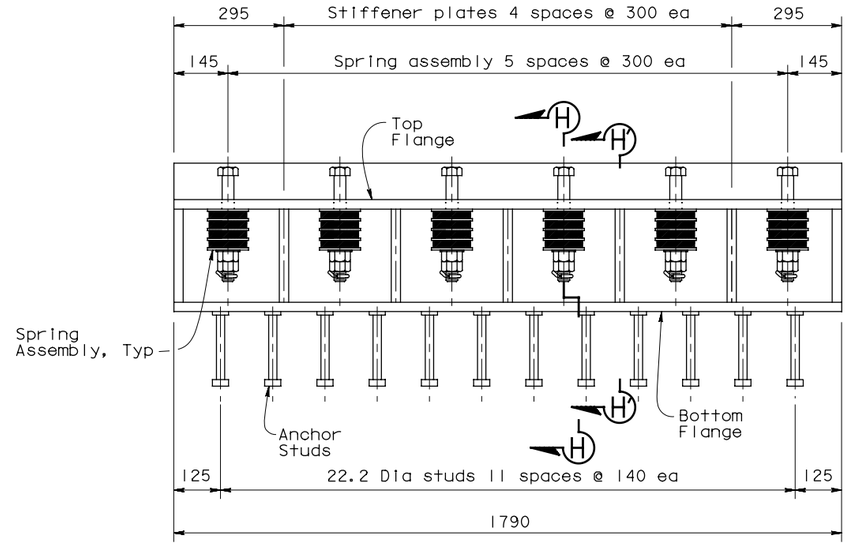

ELEVATION - BUILT UP CHANNEL ASSEMBLY "B"

NTS

SUPPLEMENTAL SHEET

CONTRACT CHANGE ORDER NO. _____

SHEET ____ OF ____

NOTES:

1. For Sections H-H and H'-H', see "Hinge KE & KW Expansion Joint Details No.6" sheet.

ALL DIMENSIONS ARE IN MILLIMETERS UNLESS OTHERWISE SHOWN

DIST.	COUNTY	ROUTE	KILOMETER POST TOTAL PROJECT	SHEET NO.	TOTAL SHEETS
04	SF	80	12.7/13.2	K701A	806

Caltrans Metric

REGISTERED ENGINEER - CIVIL

PLANS APPROVAL DATE

REGISTERED PROFESSIONAL ENGINEER — Marwan N. Nader — No. C 054426 — Exp. 12/31/13 — CIVIL — STATE OF CALIFORNIA

The State of California or its officers or agents shall not be responsible for the accuracy or completeness of electronic copies of this plan sheet.

T.Y. LIN / MOFFATT & NICHOL
TWO HARRISON STREET
SAN FRANCISCO, CA 94105

Note: Hinge KE & KW Expansion Joints to be furnished by others and installed by the Contractor.

DESIGN OVERSIGHT		DESIGN	BY C. Redfield	CHECKED M. Nader	PREPARED FOR THE STATE OF CALIFORNIA DEPARTMENT OF TRANSPORTATION
SIGN OFF DATE		DETAILS	BY H. Patel	CHECKED J. Duxbury	
Rev. Date: 5-18-98		QUANTITIES	BY H. Patel	CHECKED J. Duxbury	

Jal Birdy
PROJECT ENGINEER

BRIDGE NO. 34-0006 L/R
KILOMETER POST 12.8

CU 04
EA 0120F1

DISREGARD PRINTS BEARING EARLIER REVISION DATES →

REVISION DATES (PRELIMINARY STAGE ONLY)

SHEET K152A OF 209

SAN FRANCISCO OAKLAND BAY BRIDGE
EAST SPAN SEISMIC SAFETY PROJECT

YBI TRANSITION STRUCTURES - HINGE K

HINGE KE & KW EXPANSION JOINT DETAILS NO.5

ORIGINAL SCALE IN MILLIMETERS FOR REDUCED PLANS 0 10 20 30 40 50 60 70 80 90 100

FILE => P:\4141-06\CADD\TS\Checked Plans\YBITS #1-100% No. 2_03-03-08 (Final Renamed)\121911 Hinge K SAS T19 CCO\04-0120f1-34-006r

Dec 19, 2011

TIME PLOTTED => 3:30:07 PM
DATE PLOTTED => 12/19/2011
USERNAME => FSamson

DIST.	COUNTY	ROUTE	KILOMETER POST TOTAL PROJECT	SHEET NO.	TOTAL SHEETS
04	SF	80	12.7/13.2	K702A	806

Caltrans Metric

REGISTERED ENGINEER - CIVIL

PLANS APPROVAL DATE

The State of California or its officers or agents shall not be responsible for the accuracy or completeness of electronic copies of this plan sheet.

REGISTERED PROFESSIONAL ENGINEER Marwan N. Nader No. C 054426 Exp. 12/31/13 CIVIL STATE OF CALIFORNIA

T.Y. LIN / MOFFATT & NICHOL
TWO HARRISON STREET
SAN FRANCISCO, CA 94105

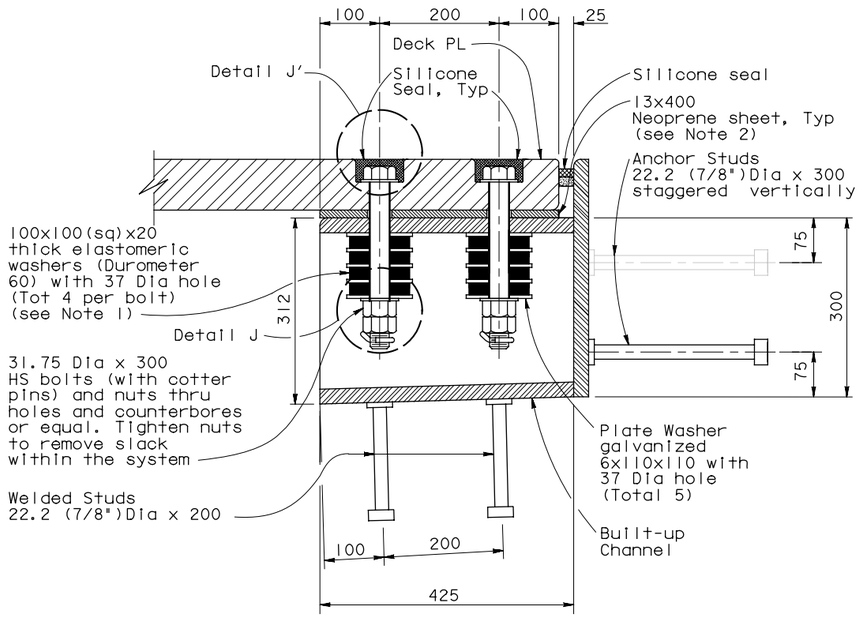

SECTION H-H
NTS

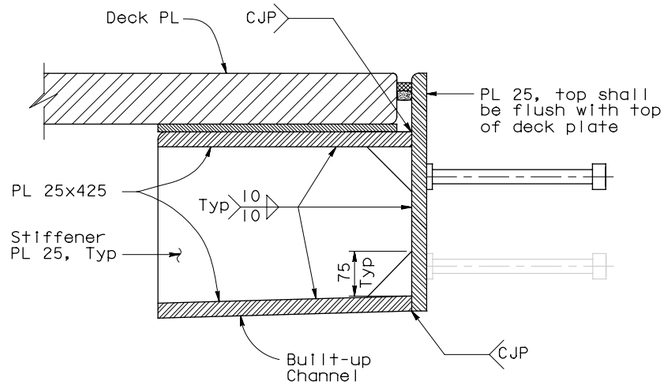

SECTION H'-H'
NTS

Note: Hinge KE & KW Expansion Joints to be furnished by others and installed by the Contractor.

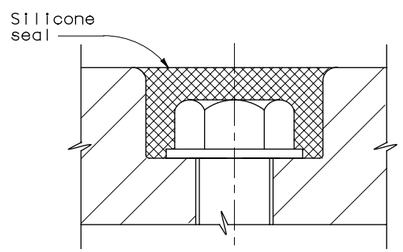

DETAIL J'
NTS

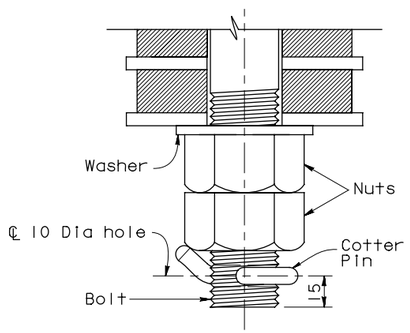

DETAIL J
NTS

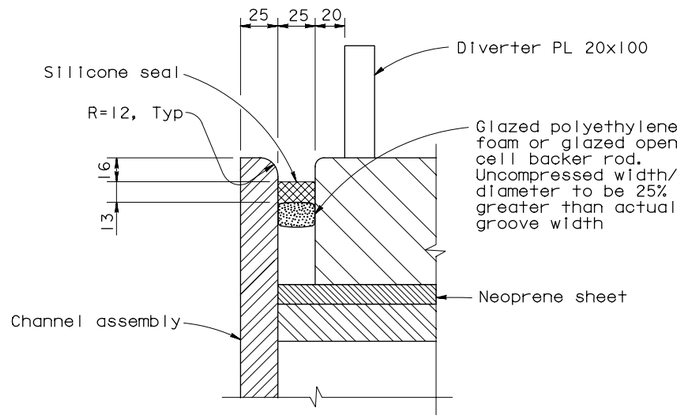

DETAIL L
NTS

NOTES:

1. Elastomeric washers shall be plain neoprene.
2. The length of the 13x400 mm neoprene sheet below the deck plate is 1360 mm and 1790 mm long for modules "A" and "B" respectively.

SUPPLEMENTAL SHEET

CONTRACT CHANGE ORDER NO. _____
SHEET ____ OF ____

ALL DIMENSIONS ARE IN MILLIMETERS UNLESS OTHERWISE SHOWN

SAN FRANCISCO OAKLAND BAY BRIDGE
EAST SPAN SEISMIC SAFETY PROJECT

YBI TRANSITION STRUCTURES - HINGE K

HINGE KE & KW EXPANSION JOINT DETAILS NO.6

DESIGN OVERSIGHT	DESIGN	BY C. Redfield	CHECKED M. Nader	PREPARED FOR THE STATE OF CALIFORNIA DEPARTMENT OF TRANSPORTATION
SIGN OFF DATE	DETAILS	BY H. Patel	CHECKED J. Duxbury	
	QUANTITIES	BY H. Patel	CHECKED J. Duxbury	

Jal Birdy
PROJECT ENGINEER

BRIDGE NO. 34-0006 L/R
KILOMETER POST 12.8

Rev. Date: 5-18-98

ORIGINAL SCALE IN MILLIMETERS FOR REDUCED PLANS 0 10 20 30 40 50 60 70 80 90 100

CU 04
EA 0120F1

DISREGARD PRINTS BEARING EARLIER REVISION DATES

REVISION DATES (PRELIMINARY STAGE ONLY)

SHEET K153A OF 209

Dec 19, 2011

USERNAME => FSamson DATE PLOTTED => 12/19/2011 TIME PLOTTED => 3:30:17 PM

FILE => P:\4141-06\CADD\TS\Checked Plans\YBITS #1-100% No. 2_03-03-08 (Final Renamed)\121911 Hinge K SAS T19 CCO\04-0120f1-34-006r

DIST.	COUNTY	ROUTE	KILOMETER POST TOTAL PROJECT	SHEET NO.	TOTAL SHEETS
04	SF	80	12.7/13.2	K703A	806

REGISTERED ENGINEER - CIVIL

PLANS APPROVAL DATE

REGISTERED PROFESSIONAL ENGINEER — Marwan N. Nader — No. C 054426 — Exp. 12/31/13 — CIVIL — STATE OF CALIFORNIA

The State of California or its officers or agents shall not be responsible for the accuracy or completeness of electronic copies of this plan sheet.

T.Y. LIN / MOFFATT & NICHOL
TWO HARRISON STREET
SAN FRANCISCO, CA 94105

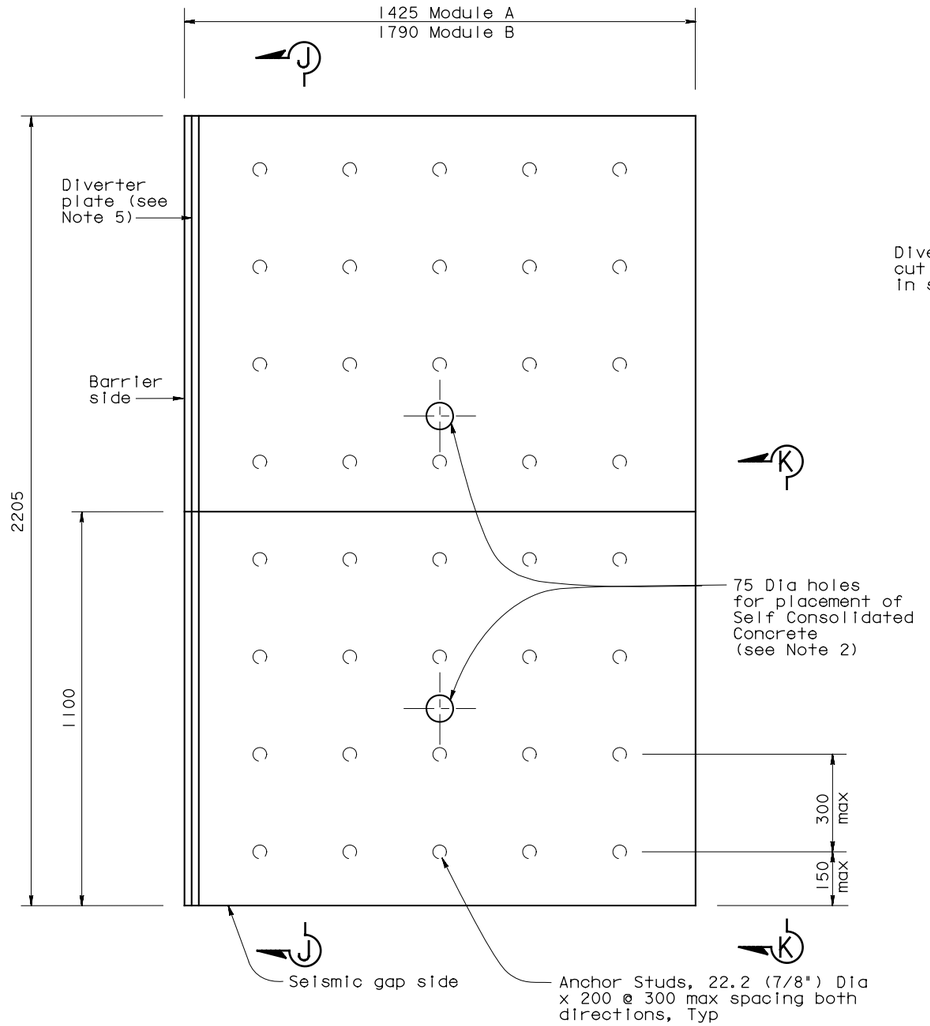

PLAN-SUPPORT PLATE
NTS

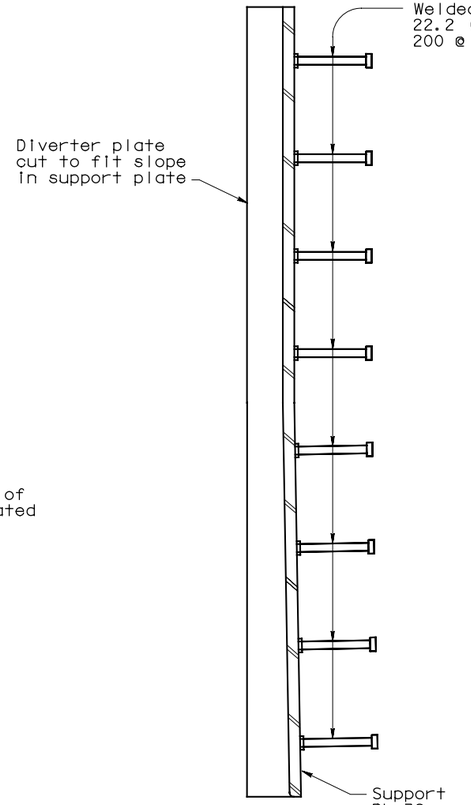

SECTION J-J
NTS

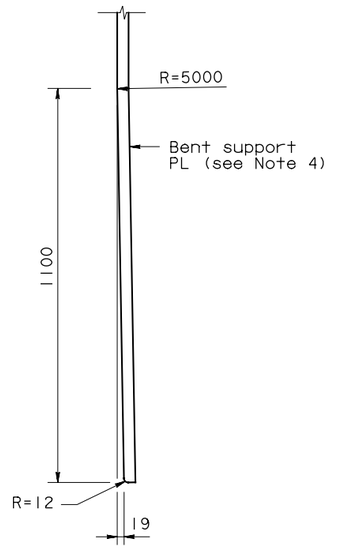

SECTION K-K
NTS

Note: Hinge KE & KW Expansion Joints to be furnished by others and installed by the Contractor.

NOTES:

1. Support Plate A shown, Support Plate B similar.
2. Exact location of 75 Dia holes to be determined prior to support plate fabrication.
3. Anchor holes for Trelleborg Transflex 2400 and Trelleborg Support Bar connection not shown. Coordinate anchor hole location with Transflex modules.
4. At the Contractor's option, the support plate may be machined in lieu of bending.
5. For diverter plate details see "Hinge KE & KW Expansion Joint Details No.3" sheet. Diverter plate applies only to support plate A.

SUPPLEMENTAL SHEET

CONTRACT CHANGE ORDER NO. _____
SHEET ____ OF ____

ALL DIMENSIONS ARE IN MILLIMETERS UNLESS OTHERWISE SHOWN

SAN FRANCISCO OAKLAND BAY BRIDGE
EAST SPAN SEISMIC SAFETY PROJECT

YBI TRANSITION STRUCTURES - HINGE K

HINGE KE & KW EXPANSION JOINT DETAILS NO.7

DESIGN	BY C. Redfield	CHECKED M. Nader	PREPARED FOR THE STATE OF CALIFORNIA DEPARTMENT OF TRANSPORTATION	Jal Birdy, PROJECT ENGINEER	BRIDGE NO. 34-0006 L/R; KILOMETER POST 12.8
DETAILS	BY H. Patel	CHECKED J. Duxbury			
QUANTITIES	BY H. Patel	CHECKED J. Duxbury			

DESIGN OVERSIGHT

SIGN OFF DATE

Rev. Date: 5-18-98

ORIGINAL SCALE IN MILLIMETERS FOR REDUCED PLANS 0 10 20 30 40 50 60 70 80 90 100

CU 04
EA 0120F1

DISREGARD PRINTS BEARING EARLIER REVISION DATES →

REVISION DATES (PRELIMINARY STAGE ONLY)

SHEET K154A OF 209

FILE => P:\4141-06\CADD\TS\Checked Plans\YBITS #1-100% No. 2_03-03-08 (Final Renamed)\121911 Hinge K SAS T19 CCO\04-0120f1-34-006r

Dec 19, 2011

USERNAME => FSamson DATE PLOTTED => 12/19/2011 TIME PLOTTED => 3:30:28 PM

DIST.	COUNTY	ROUTE	KILOMETER POST TOTAL PROJECT	SHEET NO.	TOTAL SHEETS
04	SF	80	12.7/13.2	K704A	806

REGISTERED ENGINEER - CIVIL

PLANS APPROVAL DATE

REGISTERED PROFESSIONAL ENGINEER — Marwan N. Nader — No. C 054426 — Exp. 12/31/13 — CIVIL — STATE OF CALIFORNIA

The State of California or its officers or agents shall not be responsible for the accuracy or completeness of electronic copies of this plan sheet.

T.Y. LIN / MOFFATT & NICHOL
TWO HARRISON STREET
SAN FRANCISCO, CA 94105

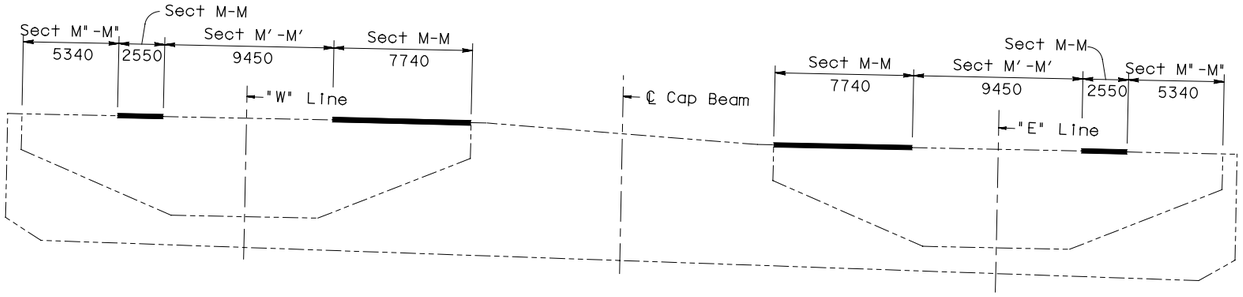

LOCATION - SECTION M-M

NTS

Note: Hinge KE & KW Expansion Joints to be furnished by others and installed by the Contractor.

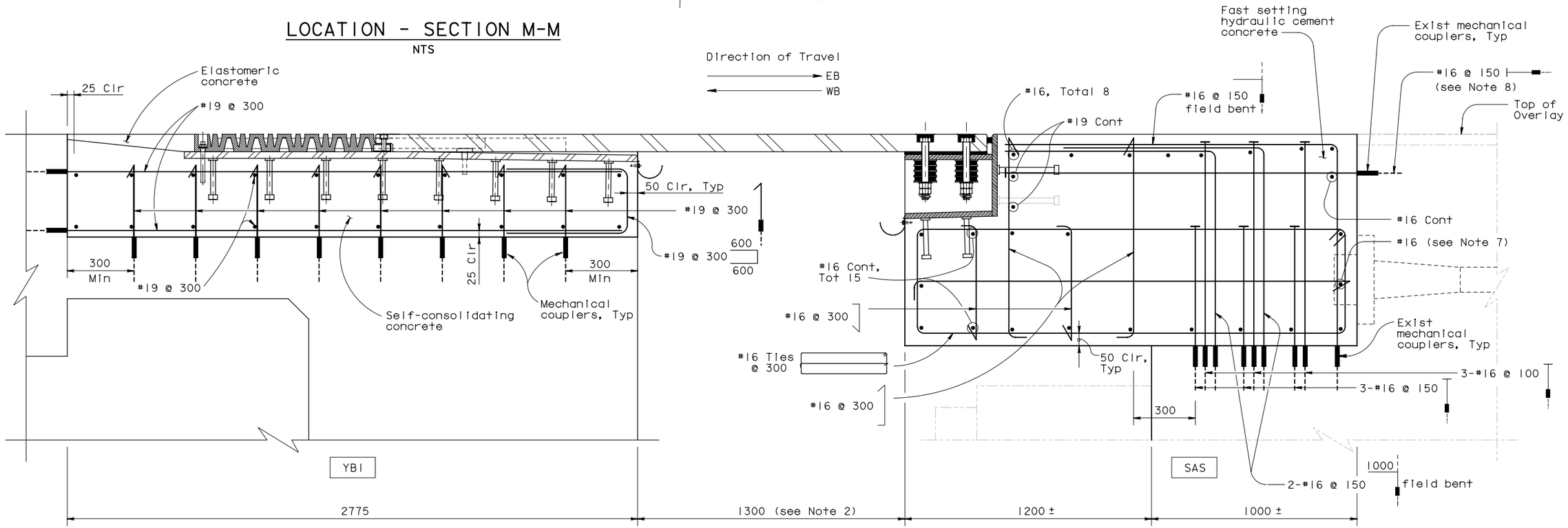

SECTION M-M

1:10

LEGEND:

⊢ Indicates "T" head reinforcement.

NOTES:

1. Rebars with mechanical couplers shall extend beyond blockout limits by at least 50 db.
2. Values are for mean temperature of 20°C.
3. Contractor shall locate all existing mechanical couplers.
4. Contractor shall connect reinforcement to existing rebar couplers at blockout limits.
5. Rebars may be relocated to match existing couplers.
6. Mechanical couplers at SAS side provided by Others.
7. Rebar shall be discontinued 25 mm clear of postensionong hardware.
8. Rebar may be bent horizontally to clear anchor studs on channel assembly.

SUPPLEMENTAL SHEET

CONTRACT CHANGE ORDER NO. _____
SHEET ____ OF ____

ALL DIMENSIONS ARE IN MILLIMETERS UNLESS OTHERWISE SHOWN

SAN FRANCISCO OAKLAND BAY BRIDGE
EAST SPAN SEISMIC SAFETY PROJECT

YBI TRANSITION STRUCTURES - HINGE K

HINGE KE & KW EXPANSION JOINT DETAILS NO.8

DESIGN OVERSIGHT		DESIGN	BY C. Redfield	CHECKED M. Nader	PREPARED FOR THE STATE OF CALIFORNIA DEPARTMENT OF TRANSPORTATION	Jal Birdy PROJECT ENGINEER	BRIDGE NO. 34-0006 L/R	KILOMETER POST 12.8
SIGN OFF DATE		DETAILS	BY H. Patel	CHECKED J. Duxbury				
		QUANTITIES	BY H. Patel	CHECKED J. Duxbury				

Rev. Date: 5-18-98

ORIGINAL SCALE IN MILLIMETERS FOR REDUCED PLANS 0 10 20 30 40 50 60 70 80 90 100

CU 04
EA 0120F1

DISREGARD PRINTS BEARING EARLIER REVISION DATES →

REVISION DATES (PRELIMINARY STAGE ONLY)

SHEET K155A OF 209

FILE => P:\4141-06\CADD\TS\Checked Plans\YBITS #1-100% No. 2_03-03-08 (Final Renamed)\121911 Hinge K SAS T19 CCO\04-0120F1-34-006r

Dec 19, 2011

TIME PLOTTED => 3:30:38 PM
DATE PLOTTED => 12/19/2011
USERNAME => fsamson

DIST.	COUNTY	ROUTE	KILOMETER POST TOTAL PROJECT	SHEET NO.	TOTAL SHEETS
04	SF	80	12.7/13.2	K705A	806

REGISTERED ENGINEER - CIVIL

PLANS APPROVAL DATE

REGISTERED PROFESSIONAL ENGINEER — Marwan N. Nader — No. C 054426 — Exp. 12/31/13 — CIVIL — STATE OF CALIFORNIA

The State of California or its officers or agents shall not be responsible for the accuracy or completeness of electronic copies of this plan sheet.

T.Y. LIN / MOFFATT & NICHOL
TWO HARRISON STREET
SAN FRANCISCO, CA 94105

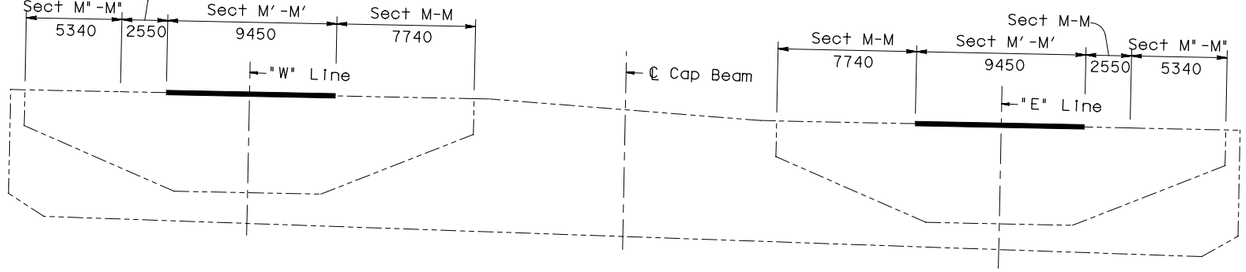

Note: Hinge KE & KW Expansion Joints to be furnished by others and installed by the Contractor.

LOCATION - SECTION M'-M'

NTS

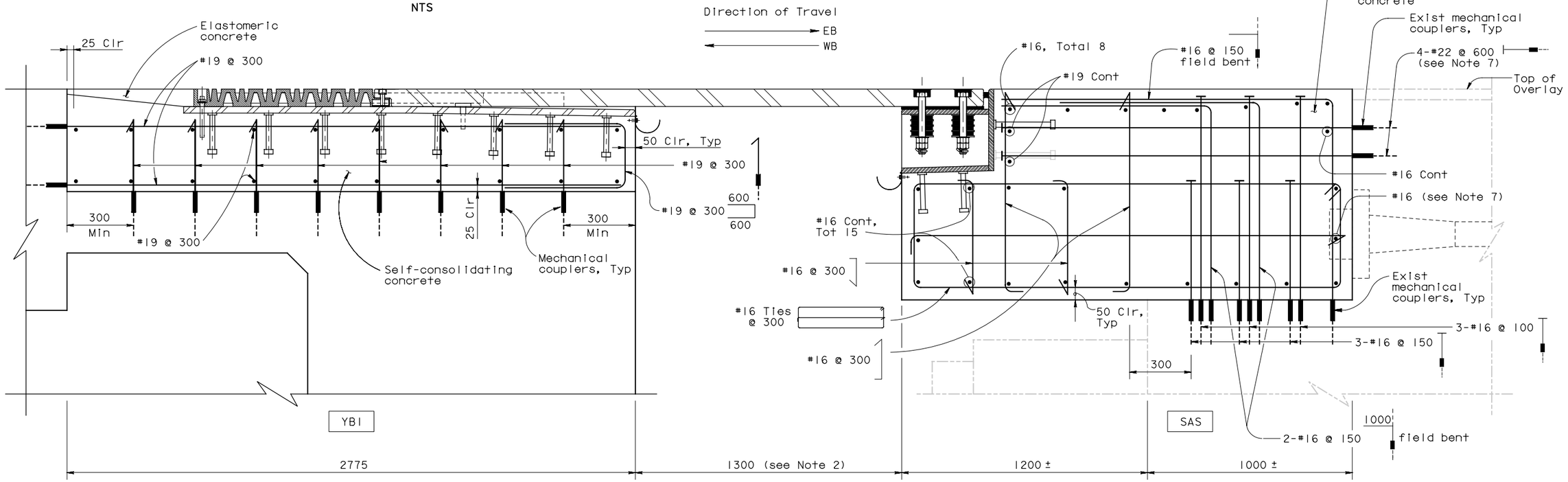

SECTION M'-M'

1:10

LEGEND:

⊢ Indicates "T" head reinforcement.

NOTES:

1. Rebars with mechanical couplers shall extend beyond blockout limits by at least 50 d_b.
2. Values are for mean temperature 20°C.
3. Contractor shall locate all existing mechanical couplers.
4. Contractor shall connect reinforcement to existing rebar couplers at blockout limits.
5. Rebars may be relocated to match existing couplers.
6. Mechanical couplers at SAS side provided by Others.
7. At locations where the spacing between continuity tendons is 500 mm or less, 2-#22 bars may be placed vertically. Rebar may be bent horizontally to clear anchor studs on channel assembly.
8. Rebar shall be discontinued 25 mm clear of postensioning hardware.

SUPPLEMENTAL SHEET

CONTRACT CHANGE ORDER NO. _____
SHEET ____ OF ____

ALL DIMENSIONS ARE IN MILLIMETERS UNLESS OTHERWISE SHOWN

SAN FRANCISCO OAKLAND BAY BRIDGE
EAST SPAN SEISMIC SAFETY PROJECT

YBI TRANSITION STRUCTURES - HINGE K

HINGE KE & KW EXPANSION JOINT DETAILS NO.9

DESIGN	BY C. Redfield	CHECKED M. Nader	PREPARED FOR THE STATE OF CALIFORNIA DEPARTMENT OF TRANSPORTATION	Jal Birdy PROJECT ENGINEER	BRIDGE NO. 34-0006 L/R
DETAILS	BY H. Patel	CHECKED J. Duxbury			KILOMETER POST 12.8
QUANTITIES	BY H. Patel	CHECKED J. Duxbury			

DESIGN OVERSIGHT

SIGN OFF DATE

Rev. Date: 5-18-98

ORIGINAL SCALE IN MILLIMETERS FOR REDUCED PLANS 0 10 20 30 40 50 60 70 80 90 100

CU 04
EA 0120F1

DISREGARD PRINTS BEARING EARLIER REVISION DATES →

REVISION DATES (PRELIMINARY STAGE ONLY)

SHEET K156A OF 209

FILE => P:\4141-06\CADD\TS\Checked Plans\YBITS #1-100% No. 2_03-03-08 (Final Renamed)\121911 HInge K SAS T19 CCO\04-0120f1-34-006r1

Dec 19, 2011

USERNAME => FSamson DATE PLOTTED => 12/19/2011 TIME PLOTTED => 3:30:47 PM

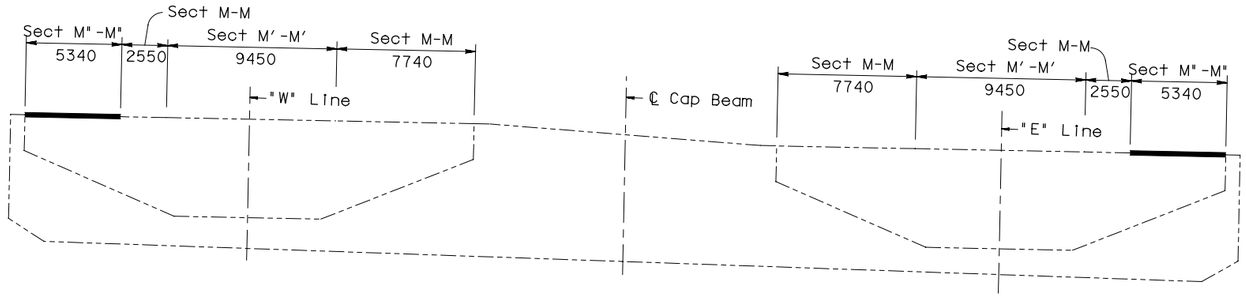

Note: Hinge KE & KW Expansion Joints to be furnished by others and installed by the Contractor.

Caltrans Metric

DIST.	COUNTY	ROUTE	KILOMETER POST TOTAL PROJECT	SHEET NO.	TOTAL SHEETS
04	SF	80	12.7/13.2	K705AA	806

REGISTERED ENGINEER - CIVIL

PLANS APPROVAL DATE

REGISTERED PROFESSIONAL ENGINEER — Marwan N. Nader — No. C 054426 — Exp. 12/31/13 — CIVIL — STATE OF CALIFORNIA

The State of California or its officers or agents shall not be responsible for the accuracy or completeness of electronic copies of this plan sheet.

T.Y. LIN / MOFFATT & NICHOL
TWO HARRISON STREET
SAN FRANCISCO, CA 94105

LOCATION - SECTION M"-M"

NTS

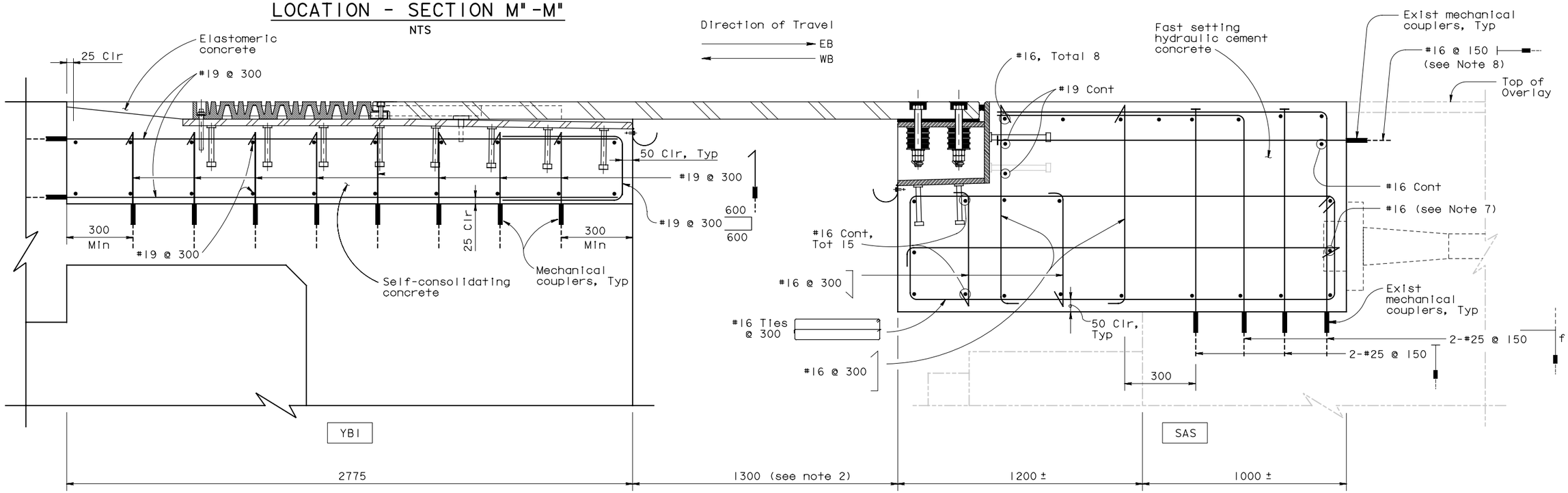

SECTION M"-M"

1:10

LEGEND:

⊢ Indicates "T" head reinforcement.

NOTES:

1. Rebars with mechanical couplers shall extend beyond blockout limits by at least 50 d_b.
2. Values are for mean temperature 20°C.
3. Contractor shall locate all existing mechanical couplers.
4. Contractor shall connect reinforcement to existing rebar couplers at blockout limits.
5. Rebars may be relocated to match existing couplers.
6. Mechanical couplers at SAS side provided by Others.
7. Rebar shall be discontinued 25 mm clear of postensionong hardware.
8. Rebar may be bent horizontally to clear anchor studs on channel assembly.

SUPPLEMENTAL SHEET

CONTRACT CHANGE ORDER NO. ____
SHEET ___ OF ___

ALL DIMENSIONS ARE IN MILLIMETERS UNLESS OTHERWISE SHOWN

SAN FRANCISCO OAKLAND BAY BRIDGE EAST SPAN SEISMIC SAFETY PROJECT

YBI TRANSITION STRUCTURES - HINGE K

HINGE KE & KW EXPANSION JOINT DETAILS NO. 10

DESIGN OVERSIGHT		DESIGN	BY C. Redfield	CHECKED M. Nader	PREPARED FOR THE STATE OF CALIFORNIA DEPARTMENT OF TRANSPORTATION
SIGN OFF DATE		DETAILS	BY H. Patel	CHECKED J. Duxbury	
Rev. Date: 5-18-98		QUANTITIES	BY H. Patel	CHECKED J. Duxbury	

Jal Birdy
PROJECT ENGINEER

CU 04
EA 0120F1

BRIDGE NO. 34-0006 L/R
KILOMETER POST 12.8

DISREGARD PRINTS BEARING EARLIER REVISION DATES →

REVISION DATES (PRELIMINARY STAGE ONLY)

SHEET K156AA OF 209

ORIGINAL SCALE IN MILLIMETERS FOR REDUCED PLANS 0 10 20 30 40 50 60 70 80 90 100

FILE => P:\4141-06\CADD\TS\Checked Plans\YBITS #1-100% No. 2_03-08 (Final Renamed)\121911 Hinge K SAS T19 CCO\04-0120f1-34-006r1

Dec 19, 2011

DATE PLOTTED => 12/19/2011 TIME PLOTTED => 3:30:57 PM USERNAME => FSamson

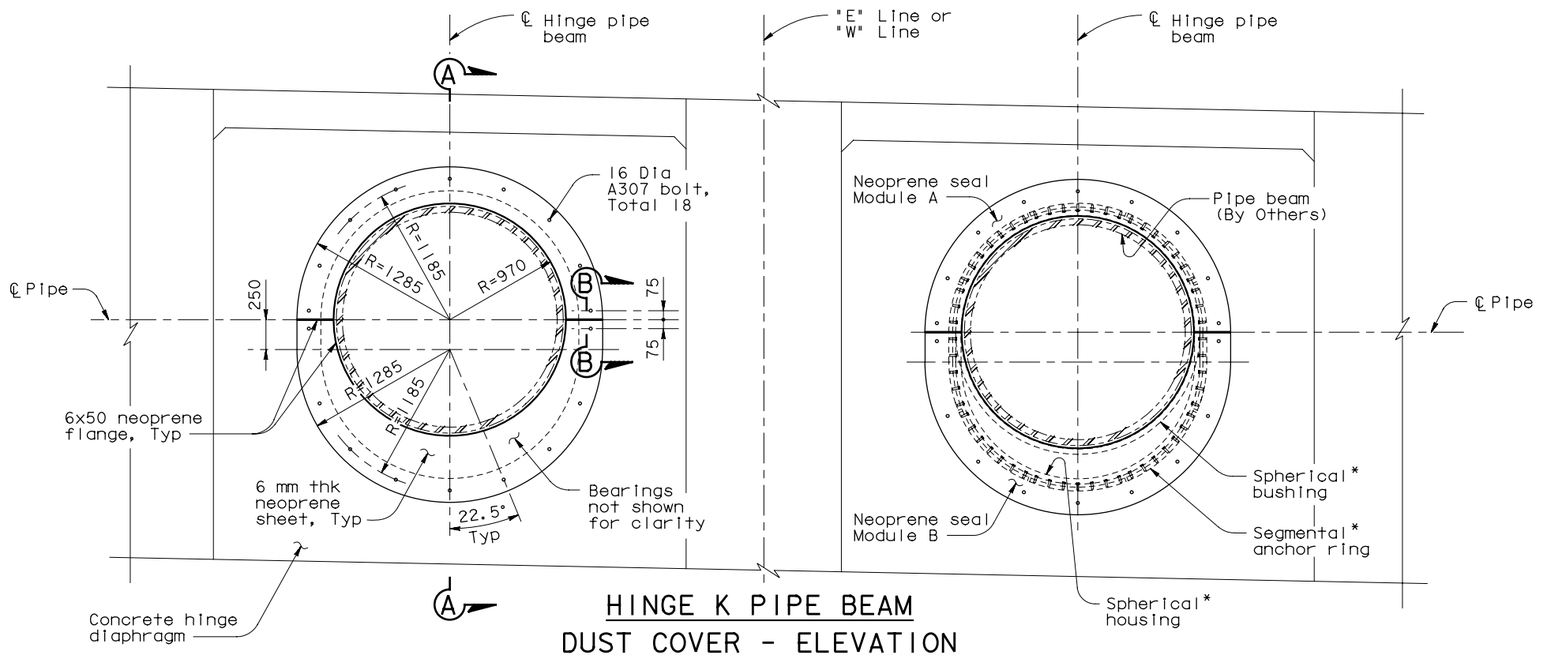

HINGE K PIPE BEAM
DUST COVER - ELEVATION

1:25

(WB Shown, EB Similar)

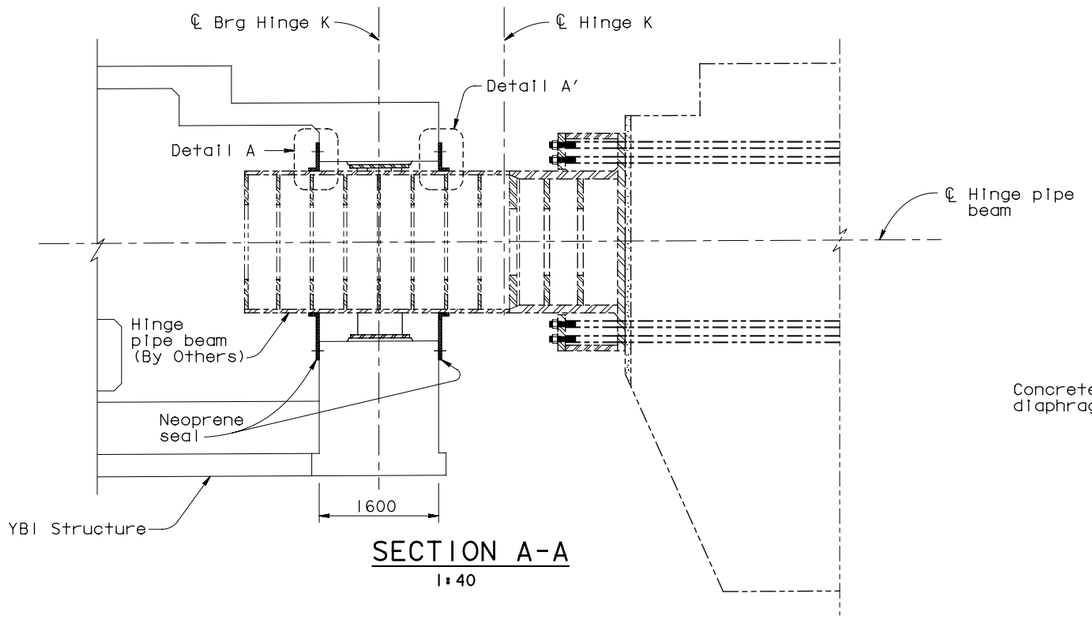

SECTION A-A

1:40

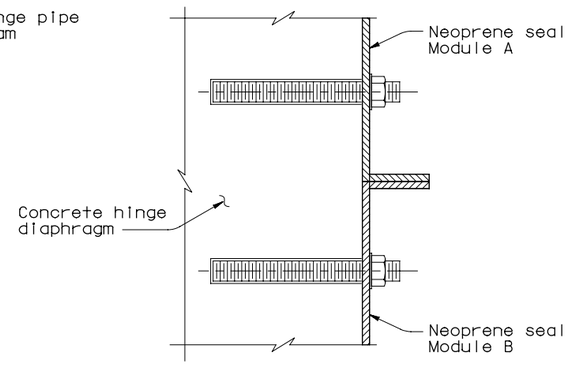

SECTION B-B

1:2.5

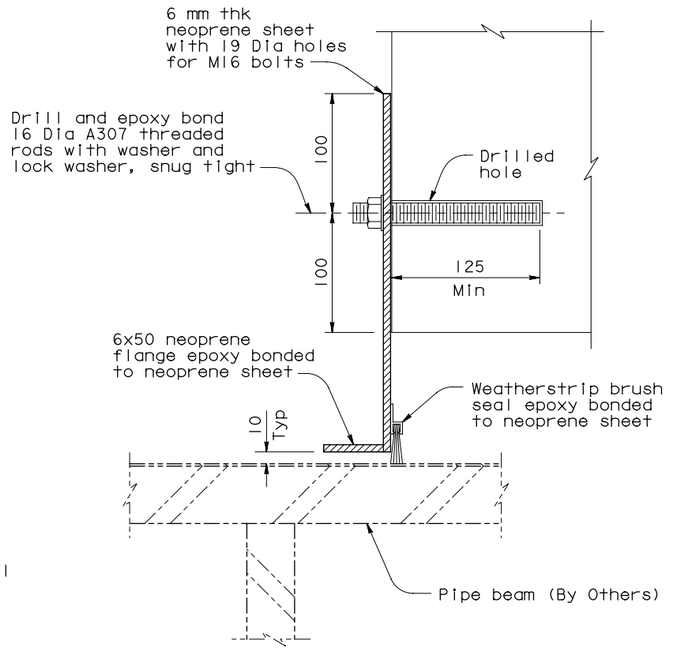

DETAIL A (Detail A' Similar)

1:2.5

NOTES:

* Furnished by Others; Erection in this contract.

SUPPLEMENTAL SHEET

CONTRACT CHANGE ORDER NO. _____

SHEET ___ OF ___

DIST.	COUNTY	ROUTE	KILOMETER POST TOTAL PROJECT	SHEET NO.	TOTAL SHEETS
04	SF	80	12.7/13.2	K705BA	806

Caltrans Metric

REGISTERED ENGINEER - CIVIL

PLANS APPROVAL DATE

REGISTERED PROFESSIONAL ENGINEER — Marwan N. Nader — No. C 054426 — Exp. 12/31/13 — CIVIL — STATE OF CALIFORNIA

The State of California or its officers or agents shall not be responsible for the accuracy or completeness of electronic copies of this plan sheet.

T.Y. LIN / MOFFATT & NICHOL
TWO HARRISON STREET
SAN FRANCISCO, CA 94105

DESIGN OVERSIGHT		DESIGN	BY N. Vo	CHECKED M. Nader	PREPARED FOR THE STATE OF CALIFORNIA DEPARTMENT OF TRANSPORTATION
SIGN OFF DATE		DETAILS	BY H. Patel	CHECKED J. Duxbury	
Rev. Date: 5-18-98		QUANTITIES	BY H. Patel	CHECKED J. Duxbury	

Jal Birdy
PROJECT ENGINEER

CU 04
EA 0120F1

BRIDGE NO. 34-0006 L/R
KILOMETER POST 12.8

SAN FRANCISCO OAKLAND BAY BRIDGE EAST SPAN SEISMIC SAFETY PROJECT

YBI TRANSITION STRUCTURES - HINGE K

HINGE K PIPE BEAM DUST COVER DETAILS

ORIGINAL SCALE IN MILLIMETERS FOR REDUCED PLANS 0 10 20 30 40 50 60 70 80 90 100

DISREGARD PRINTS BEARING EARLIER REVISION DATES →

REVISION DATES (PRELIMINARY STAGE ONLY)

SHEET K156BA OF 209

FILE => P:\4141-06\CADD\TS\Checked Plans\YBITS #1-100% No. 2_03-08 (FInal Renamed)\121911 HInge K SAS T19 CCO\04-0120f1-34-006r1

Dec 19, 2011

USERNAME => FSamson DATE PLOTTED => 12/19/2011 TIME PLOTTED => 3:31:09 PM

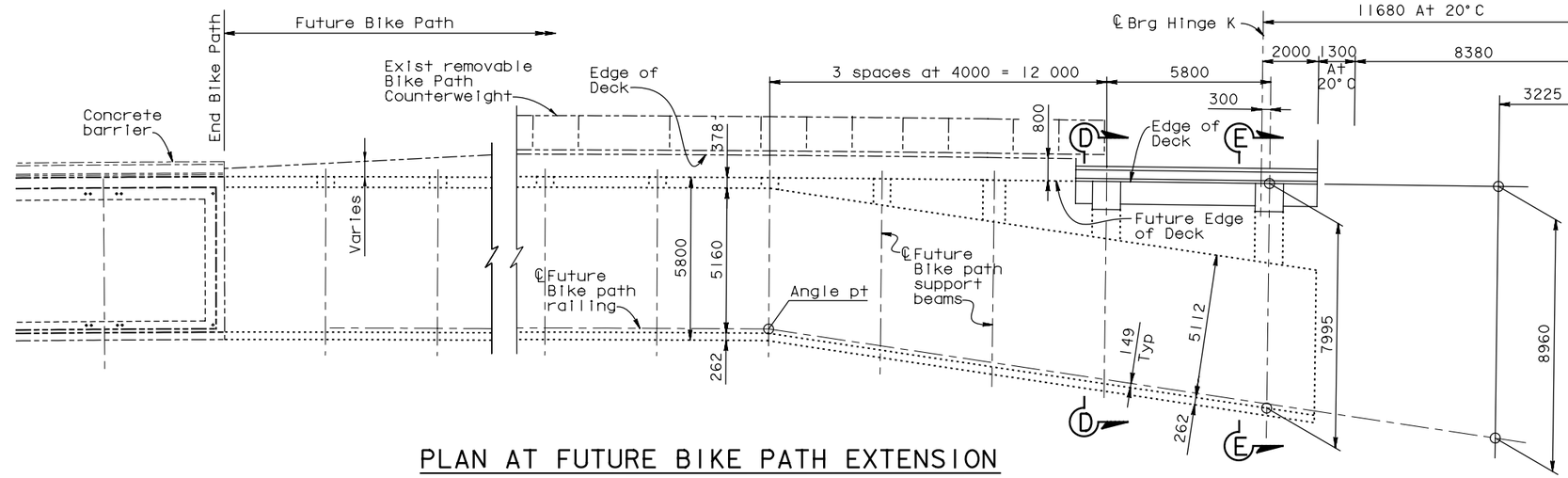

PLAN AT FUTURE BIKE PATH EXTENSION

1:100

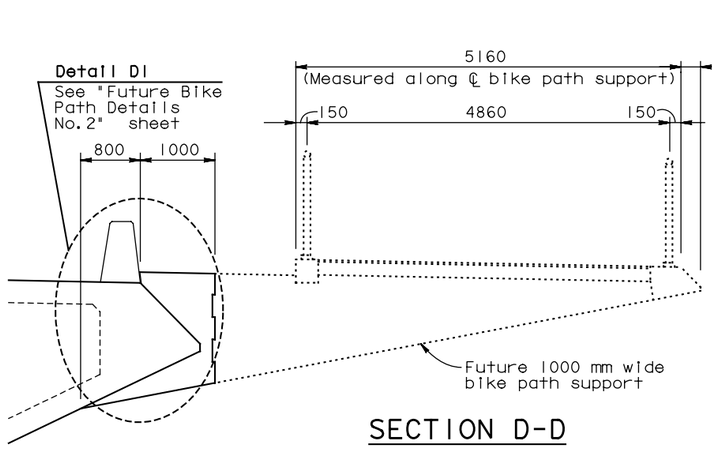

SECTION D-D

1:40

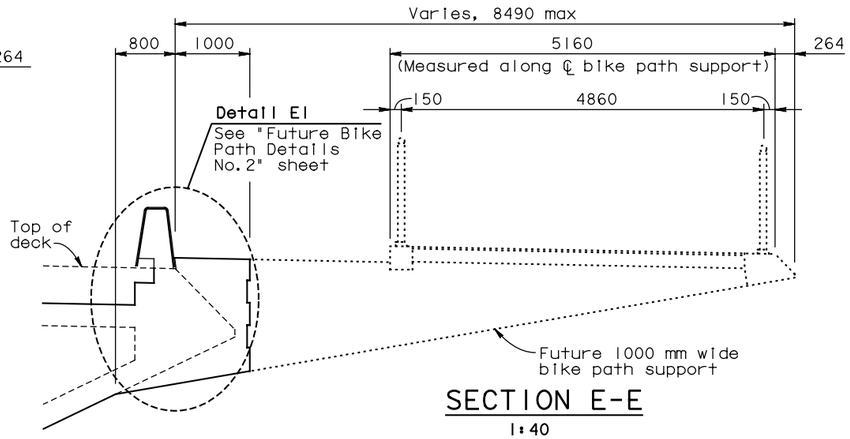

SECTION E-E

1:40

DIST.	COUNTY	ROUTE	KILOMETER POST TOTAL PROJECT	SHEET NO.	TOTAL SHEETS
04	SF	80	12.7/13.2	K708A	806

REGISTERED ENGINEER - CIVIL

PLANS APPROVAL DATE

REGISTERED PROFESSIONAL ENGINEER — A.L. ELY — No. 18880 — Exp. 6-30-13 — CIVIL — STATE OF CALIFORNIA

The State of California or its officers or agents shall not be responsible for the accuracy or completeness of electronic copies of this plan sheet.

T.Y. LIN / MOFFATT & NICHOL
TWO HARRISON STREET
SAN FRANCISCO, CA 94105

SUPPLEMENTAL SHEET

CONTRACT CHANGE ORDER NO. _____
SHEET ____ OF ____

ALL DIMENSIONS ARE IN MILLIMETERS UNLESS OTHERWISE SHOWN

SAN FRANCISCO OAKLAND BAY BRIDGE EAST SPAN SEISMIC SAFETY PROJECT

YBI TRANSITION STRUCTURES - HINGE K

FUTURE BIKE PATH DETAILS NO. 1

	BY	CHECKED
DESIGN	Atiqullah	Ahn
DETAILS	van Ryn/Zucchi/Mal	Jain
QUANTITIES	Liao	E. Nichol

PREPARED FOR THE STATE OF CALIFORNIA DEPARTMENT OF TRANSPORTATION

Jal Birdy
PROJECT ENGINEER

BRIDGE NO. 34-0006 L/R
KILOMETER POST 12.8

DESIGN OVERSIGHT

SIGN OFF DATE

Rev. Date: 5-18-98

ORIGINAL SCALE IN MILLIMETERS FOR REDUCED PLANS 0 10 20 30 40 50 60 70 80 90 100

CU 04
EA 0120F1

DISREGARD PRINTS BEARING EARLIER REVISION DATES →

REVISION DATES (PRELIMINARY STAGE ONLY)

SHEET K159A OF 209

FILE => P:\4141-06\CADD\TS\Checked Plans\YBITS #1-100% No. 2_03-03-08 (Final Renamed)\121911 Hinge K SAS TI9 CCO\04-0120f1-34-006r1-u-fbikpdt01.dgn

Dec 19, 2011

USERNAME => FSamson DATE PLOTTED => 12/19/2011 TIME PLOTTED => 3:31:36 PM

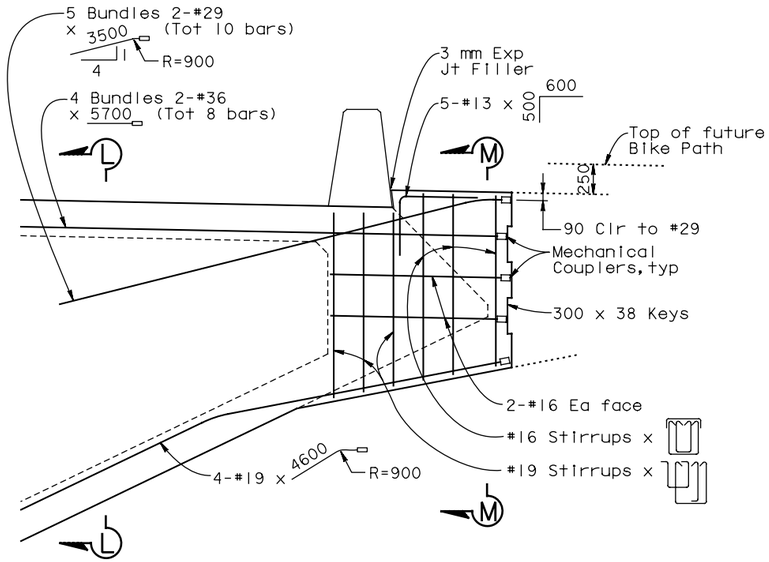

DETAIL D1

1:25

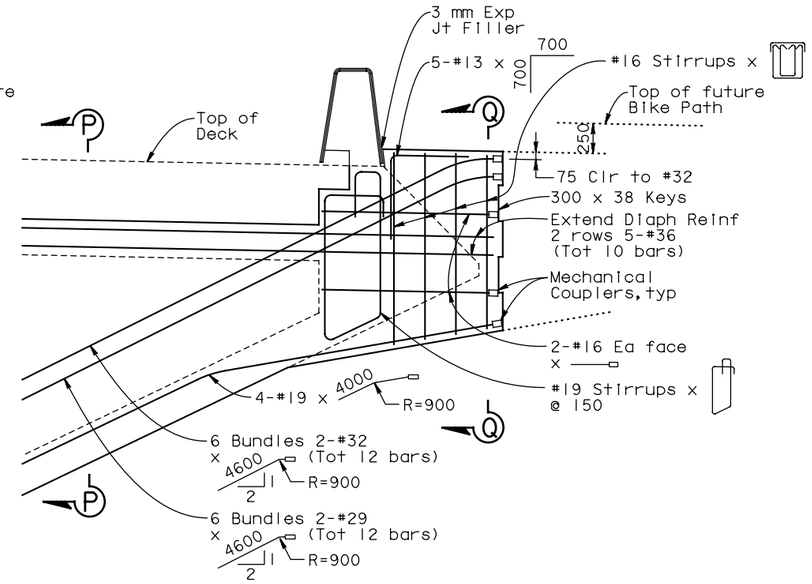

DETAIL E1

1:25

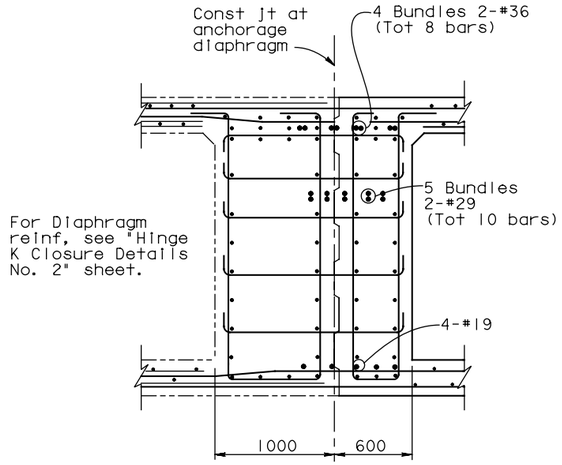

SECTION L-L

1:25

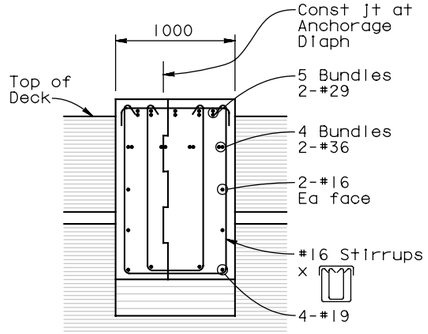

SECTION M-M

1:25

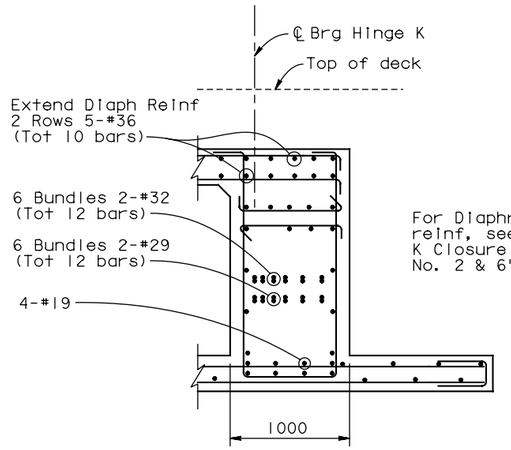

SECTION P-P

1:25

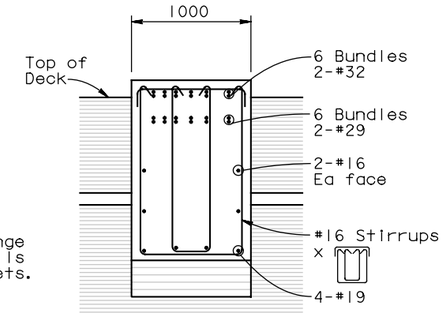

SECTION Q-Q

1:25

Note: For location of Details D1 & E1, see "Future Bike Path Details No. 1" sheet.

DIST.	COUNTY	ROUTE	KILOMETER POST TOTAL PROJECT	SHEET NO.	TOTAL SHEETS
04	SF	80	12.7/13.2	K710A	806

REGISTERED ENGINEER - CIVIL

PLANS APPROVAL DATE

REGISTERED PROFESSIONAL ENGINEER — A.L. ELY — No. 18880 — Exp. 6-30-13 — CIVIL — STATE OF CALIFORNIA

The State of California or its officers or agents shall not be responsible for the accuracy or completeness of electronic copies of this plan sheet.

T.Y. LIN / MOFFATT & NICHOL
TWO HARRISON STREET
SAN FRANCISCO, CA 94105

SUPPLEMENTAL SHEET

CONTRACT CHANGE ORDER NO. _____
SHEET ____ OF ____

ALL DIMENSIONS ARE IN MILLIMETERS UNLESS OTHERWISE SHOWN

SAN FRANCISCO OAKLAND BAY BRIDGE
EAST SPAN SEISMIC SAFETY PROJECT

YBI TRANSITION STRUCTURES - HINGE K

FUTURE BIKE PATH DETAILS NO. 2

	BY	CHECKED
DESIGN	Atiqullah	Ahn
DETAILS	van Ryn/Zucchi/Mal	Jain
QUANTITIES	Liao	E. Nichol

PREPARED FOR THE STATE OF CALIFORNIA DEPARTMENT OF TRANSPORTATION

Jal Birdy
PROJECT ENGINEER

BRIDGE NO. 34-0006 L/R
KILOMETER POST 12.8

DESIGN OVERSIGHT

SIGN OFF DATE

Rev. Date: 5-18-98

ORIGINAL SCALE IN MILLIMETERS FOR REDUCED PLANS 0 10 20 30 40 50 60 70 80 90 100

CU 04
EA 0120F1

DISREGARD PRINTS BEARING EARLIER REVISION DATES →

REVISION DATES (PRELIMINARY STAGE ONLY)

SHEET K161A OF 209

FILE => P:\4141-06\CADD\TS\Checked Plans\YBITS #1-100% No. 2_03-03-08 (Final Renamed)\121911 Hinge K SAS T19 CCO\04-0120F1-34-006R1-u-fb1kpdt02.dgn

Dec 19, 2011

USERNAME => FSamson DATE PLOTTED => 12/19/2011 TIME PLOTTED => 3:31:49 PM

DIST.	COUNTY	ROUTE	KILOMETER POST TOTAL PROJECT	SHEET NO.	TOTAL SHEETS
04	SF	80	12.7/13.2	K715A	806

REGISTERED ENGINEER - CIVIL

PLANS APPROVAL DATE

The State of California or its officers or agents shall not be responsible for the accuracy or completeness of electronic copies of this plan sheet.

REGISTERED PROFESSIONAL ENGINEER — A.L. ELY — No. 18880 — Exp. 6-30-13 — CIVIL — STATE OF CALIFORNIA

T.Y. LIN / MOFFATT & NICHOL
TWO HARRISON STREET
SAN FRANCISCO, CA 94105

SUPPLEMENTAL SHEET

CONTRACT CHANGE ORDER NO. ___
SHEET ___ OF ___

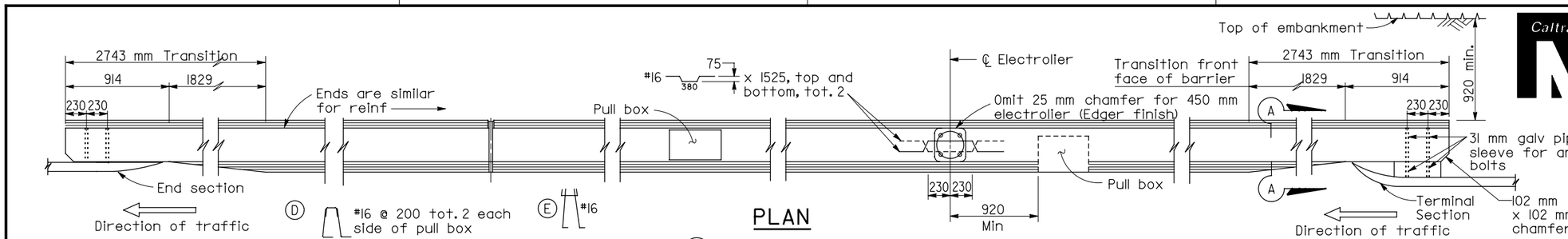

PLAN

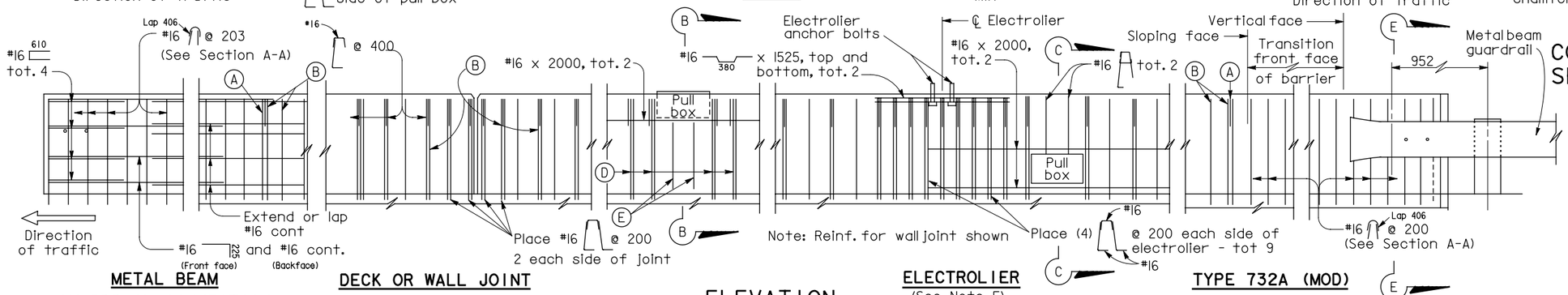

ELEVATION

METAL BEAM GUARDRAIL CONNECTION

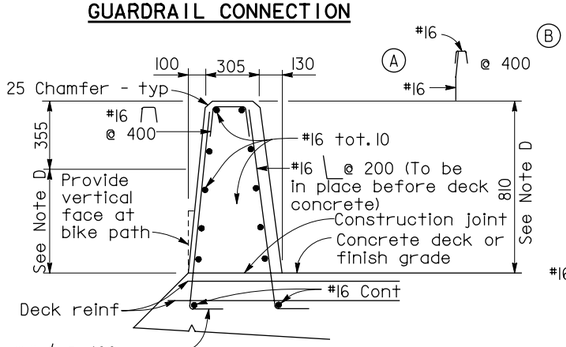

TYPE 732 (MOD)

DECK OR WALL JOINT

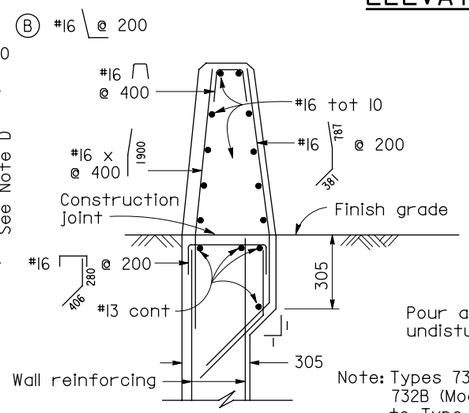

TYPE 732A (MOD)

Note: Types 732A (Mod) & 732B (Mod) are similar to Type 732 (Mod) except as noted

ELECTROLIER
(See Note F)

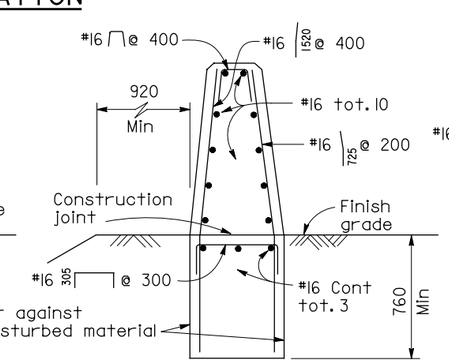

TYPE 732B (MOD)

TYPE 732A (MOD)

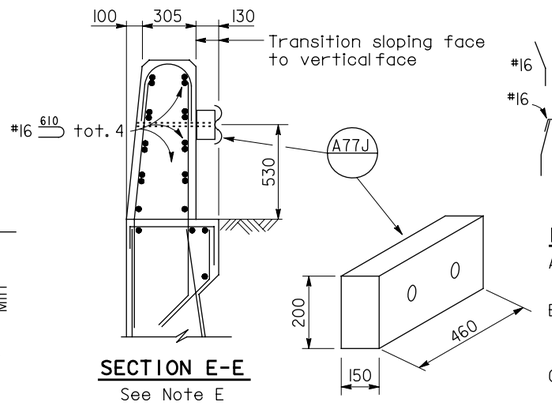

SECTION E-E
See Note E

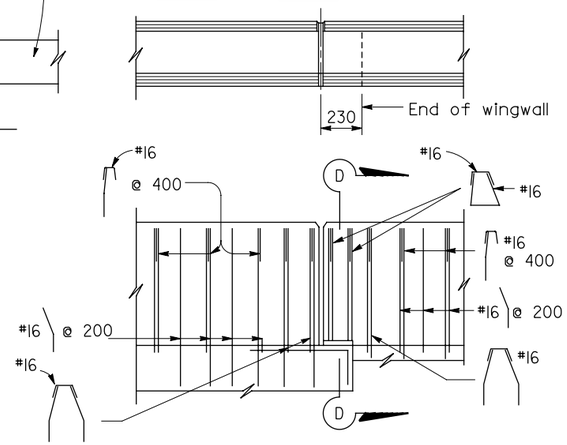

TYPE 732A (MOD) TYPE 732B (MOD)

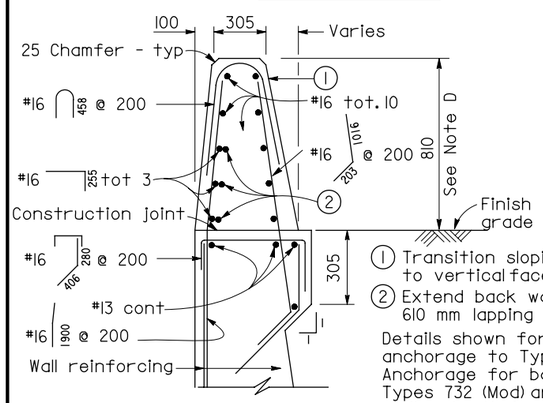

Details shown for barrier anchorage to Type 732A (Mod). Anchorage for barrier Types 732 (Mod) and 732B (Mod) are similar to their respective details.

SECTION A-A

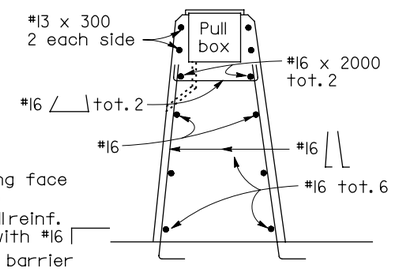

SECTION B-B

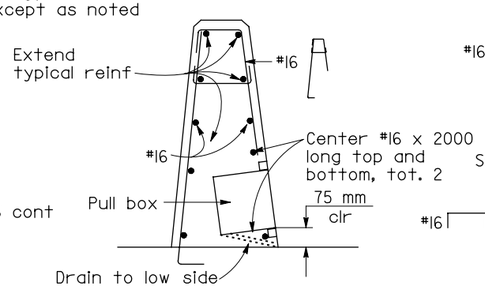

SECTION C-C
See Notes

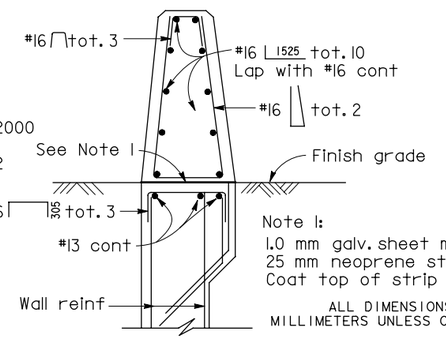

SECTION D-D

ALL DIMENSIONS ARE IN MILLIMETERS UNLESS OTHERWISE SHOWN

NOTES

A. Walls are to be backfilled before barrier is placed.

B. Clearance to reinforcing steel in barrier to be 25 mm, except as noted. Longitudinal reinforcement to stop at all expansion joints.

C. See project plans for locations of electroliers and pull boxes.

D. Dimensions may vary with roadway cross slope and with certain thickness of surfacing. See Project Plans.

E. For Metal Beam Guardrail Connection details not shown, see General Plan and Standard Plans.

F. Refer to Project Plans and Standard Plan Sheets ES-9A, ES-9C and ES-9D for electrical details concerning barriers. The maximum number of conduits in a barrier is limited to two (2) 50 mm conduits (max.) along with one (1) 75 mm conduit. When a 75 mm conduit is used, it is restricted to the base of barrier.

G. Minimum concrete edge distance to reinforcing shown, shall be maintained, edge distance may be adjusted to accomodate increase in concrete cover for architectural treatment. See Typical Section.

SAN FRANCISCO OAKLAND BAY BRIDGE
EAST SPAN SEISMIC SAFETY PROJECT

YBI TRANSITION STRUCTURES - HINGE K

CONCRETE BARRIER TYPE 732 (MOD)

DESIGN OVERSIGHT		DESIGN	BY Desai	CHECKED Jain
SIGN OFF DATE		DETAILS	BY van Ryn/Zucchi/Mai	CHECKED Jain
		QUANTITIES	BY Liao	CHECKED E. Nichol

PREPARED FOR THE STATE OF CALIFORNIA
DEPARTMENT OF TRANSPORTATION

Jal Birdy
PROJECT ENGINEER

BRIDGE NO.	34-0006 L/R
KILOMETER POST	12.8

CU 04
EA 0120F1

DISREGARD PRINTS BEARING EARLIER REVISION DATES →

REVISION DATES (PRELIMINARY STAGE ONLY)

SHEET	OF
K166A	209

Rev. Date: 5-18-98

ORIGINAL SCALE IN MILLIMETERS FOR REDUCED PLANS 0 10 20 30 40 50 60 70 80 90 100

FILE => P:\4141-06\CADD\TS\Checked Plans\YBITS #1-100% No. 2_03-03-08 (Final Renamed)\121911 Hinge K SAS T19 CCO\04-0120f1-34-006r1-u-concbar.dgn

Dec 19, 2011

USERNAME => FSamson DATE PLOTTED => 12/19/2011 TIME PLOTTED => 3:31:24 PM