DIST.	COUNTY	ROUTE	KILOMETER POST TOTAL PROJECT	SHEET NO.	TOTAL SHEETS
04	SF	80	12.7/13.2	K550A	806

Caltrans Metric

REGISTERED ENGINEER - CIVIL

PLANS APPROVAL DATE

REGISTERED PROFESSIONAL ENGINEER A.L. ELY No. 18880 Exp. 6-30-13 CIVIL STATE OF CALIFORNIA

The State of California or its officers or agents shall not be responsible for the accuracy or completeness of electronic copies of this plan sheet.

T.Y. LIN / MOFFATT & NICHOL
TWO HARRISON STREET
SAN FRANCISCO, CA 94105

SUPPLEMENTAL SHEET

CONTRACT CHANGE ORDER NO. ____
SHEET ___ OF ___

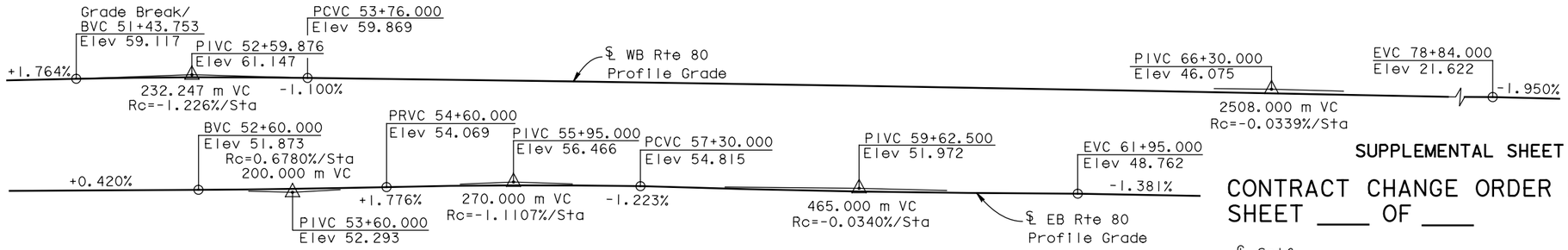

PROFILE GRADE

NO SCALE

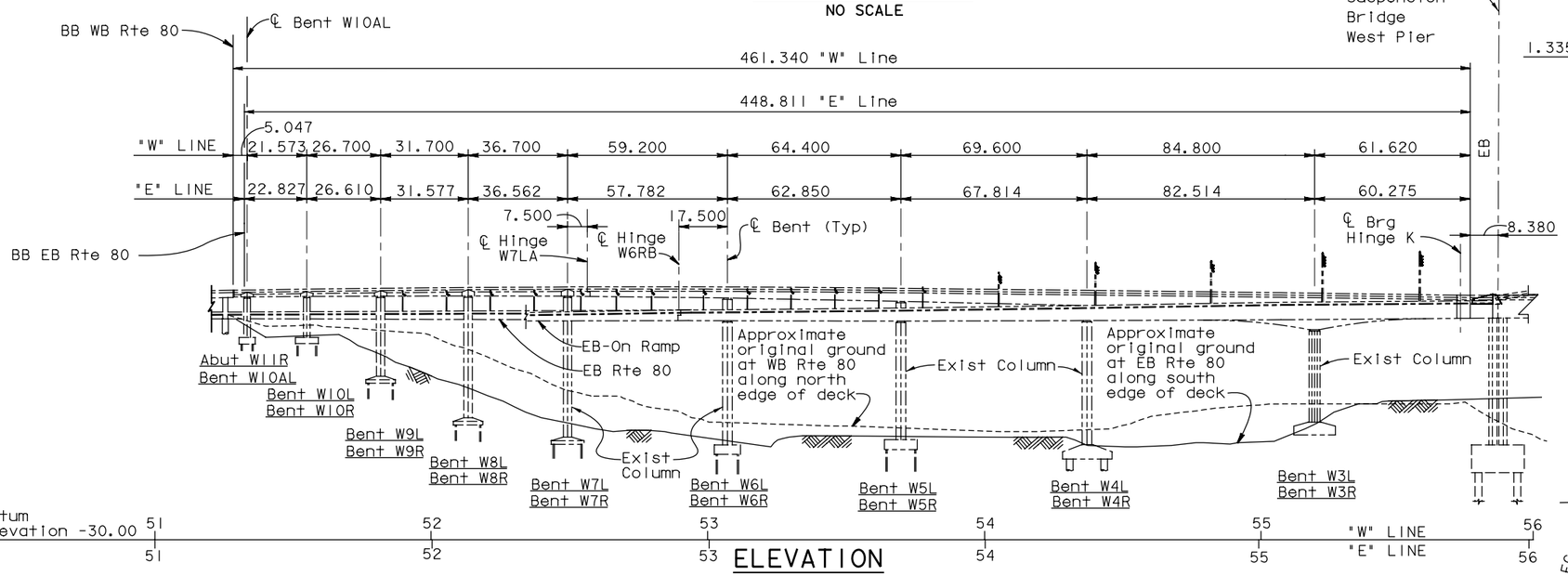

ELEVATION

1:1000

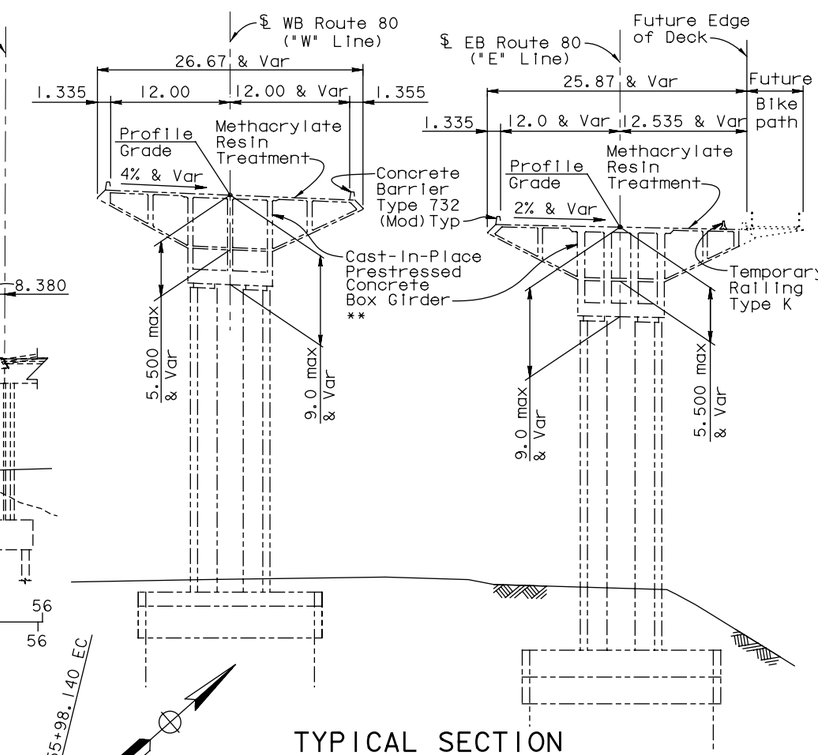

TYPICAL SECTION

(Bent W3L & W3R Shown)

1:300

** Note WB Superstructure is a Cast-in-Place conventionally reinforced concrete box girder from Bent W10AL to Hinge W7LA

Notes:
For approximate bridge quantities see "Foundation Plan" sheet.
For index to Bridge Plans see "Structure Plan" sheet.

-------- Indicates existing structures.

Standard Plan Sheet No.
Detail No.

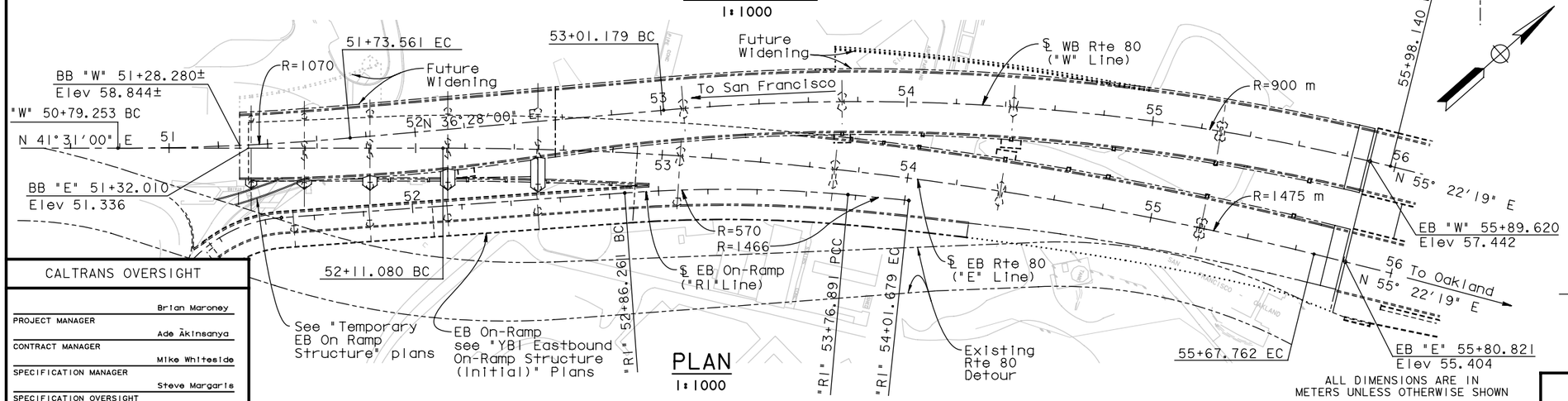

PLAN

1:1000

ALL DIMENSIONS ARE IN METERS UNLESS OTHERWISE SHOWN

CALTRANS OVERSIGHT

PROJECT MANAGER	Brian Maroney
CONTRACT MANAGER	Ade Akinsanya
SPECIFICATION MANAGER	Mike Whiteside
SPECIFICATION OVERSIGHT	Steve Margaris

DESIGN OVERSIGHT

SIGN OFF DATE

Rev. Date: 5-18-98

	BY	CHECKED	LOAD FACTOR DESIGN	LIVE LOADING: HS20-44 AND ALTERNATIVE AND PERMIT DESIGN LOAD	
DESIGN	Desai	Jain			
DETAILS	van Ryn/Zucchi/Mai	Jain	LAYOUT	Desai	Alcaraz
QUANTITIES	Liao	E. Nichol	SPECIFICATIONS	J. Ely	Jain

ORIGINAL SCALE IN MILLIMETERS FOR REDUCED PLANS 0 10 20 30 40 50 60 70 80 90 100

PREPARED FOR THE STATE OF CALIFORNIA DEPARTMENT OF TRANSPORTATION

Jal Birdy
PROJECT ENGINEER

CU 04
EA 0120F1

BRIDGE NO. 34-0006 L/R
KILOMETER POST 12.8

DISREGARD PRINTS BEARING EARLIER REVISION DATES

REVISION DATES (PRELIMINARY STAGE ONLY)

SHEET K1A OF 209

SAN FRANCISCO OAKLAND BAY BRIDGE
EAST SPAN SEISMIC SAFETY PROJECT

YBI TRANSITION STRUCTURES - HINGE K

GENERAL PLAN

FILE => P:\4141-06\CADD\TS\Checked Plans\YBITS #1-100% No. 2_03-03-08 (Final Renamed)\121911 Hinge K SAS T19 CCO\04-0120f1-34-006r1-a-gp01.dgn

USERNAME => FSamson DATE PLOTTED => 12/19/2011 TIME PLOTTED => 3:25:52 PM

Dec 19, 2011

DIST.	COUNTY	ROUTE	KILOMETER POST TOTAL PROJECT	SHEET NO.	TOTAL SHEETS
04	SF	80	12.7/13.2	K554A	806

Caltrans Metric

REGISTERED ENGINEER - CIVIL

PLANS APPROVAL DATE

REGISTERED PROFESSIONAL ENGINEER A.L. ELY No. 18880 Exp. 6-30-13 CIVIL STATE OF CALIFORNIA

The State of California or its officers or agents shall not be responsible for the accuracy or completeness of electronic copies of this plan sheet.

T.Y. LIN / MOFFATT & NICHOL
TWO HARRISON STREET
SAN FRANCISCO, CA 94105

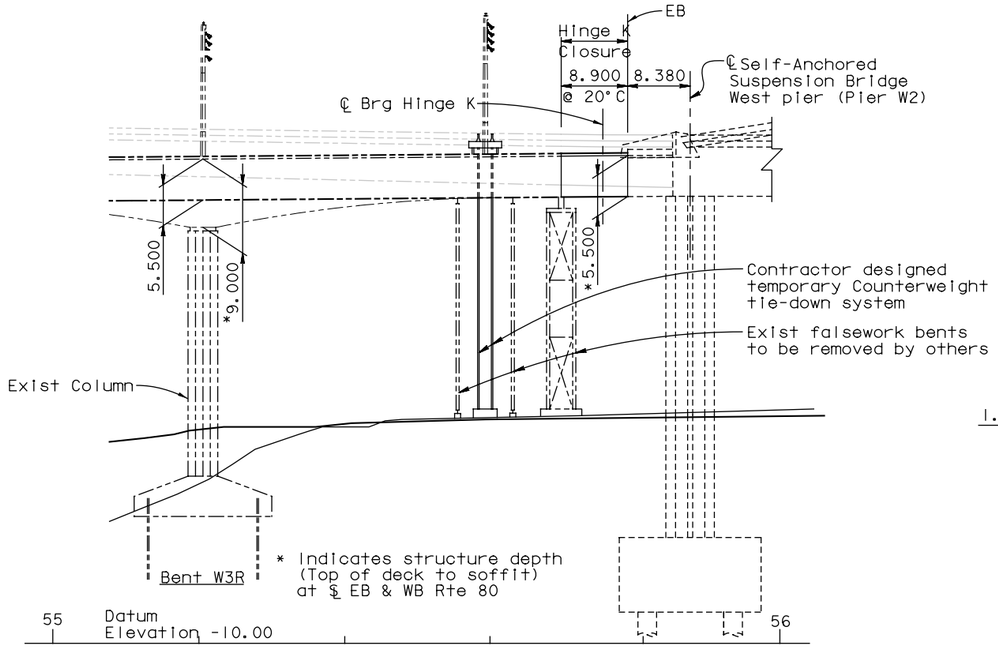

PARTIAL ELEVATION

(EB Structure shown, WB Structure similar)
1:400

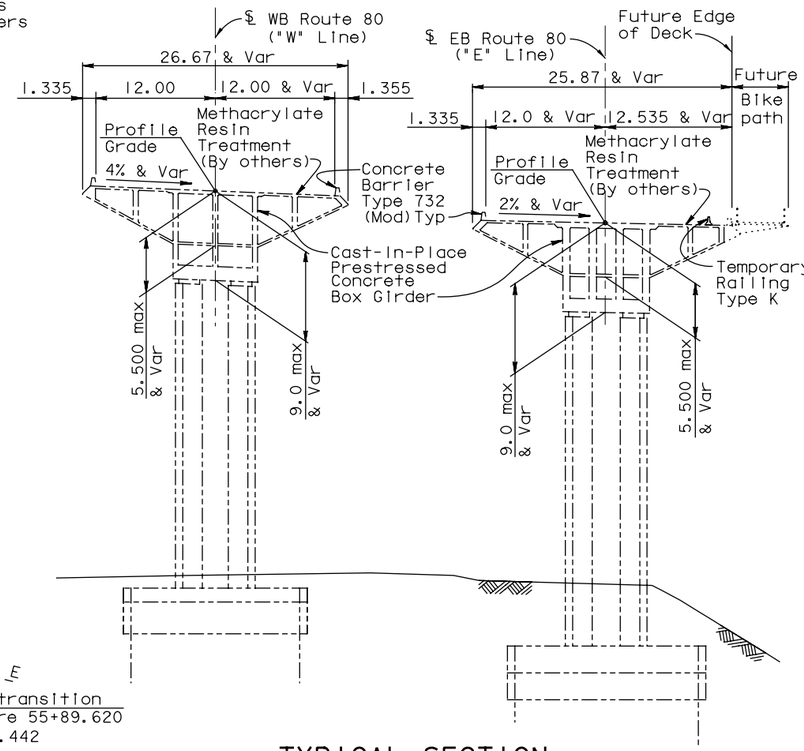

TYPICAL SECTION

(Bent W3L & W3R Shown)
1:300

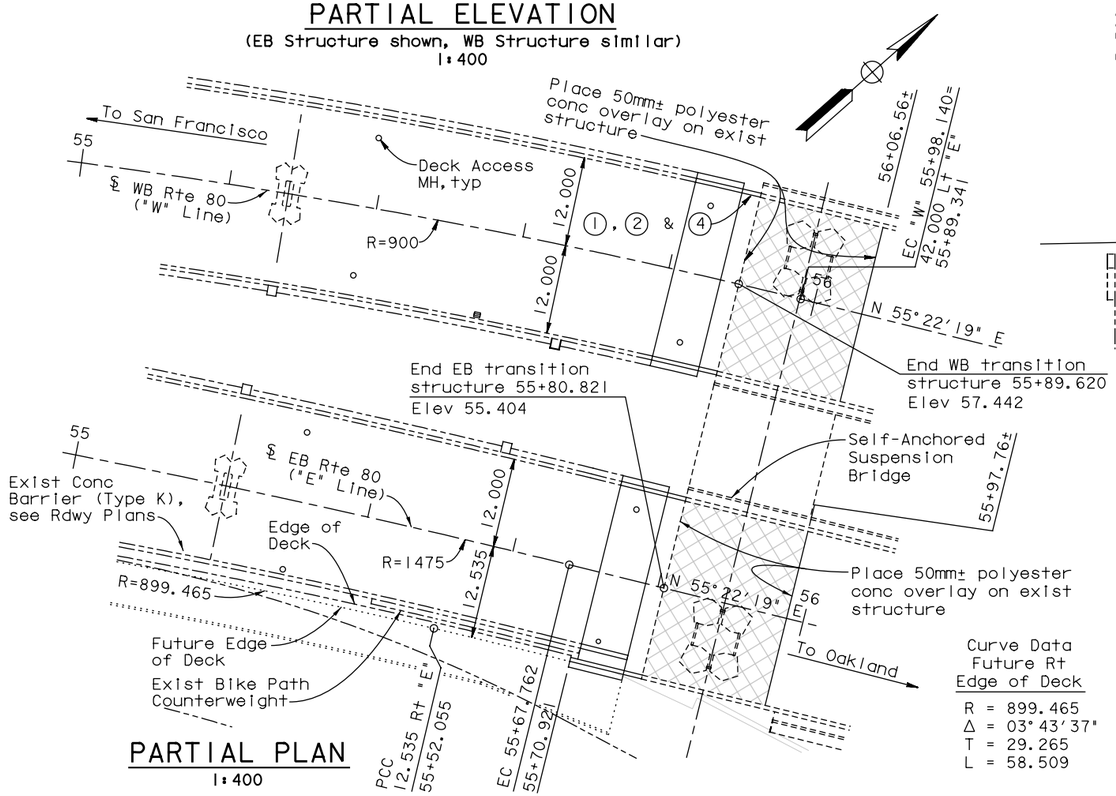

PARTIAL PLAN

1:400

Curve Data "W" Line

R = 900.000
Δ = 18°54'18"
T = 149.842
L = 296.961

Curve Data "E" Line

R = 1475.000
Δ = 13°51'19"
T = 179.215
L = 356.682

Curve Data Future Rt Edge of Deck

R = 899.465
Δ = 03°43'37"
T = 29.265
L = 58.509

Notes:

1. Paint "YBI WB TRANSITION STRUCTURE"
2. Paint "Bridge number 34-0006 L"
4. Paint hinge number

For General Notes see "Deck Contours" sheet.

For Approximate Bridge Quantities see "Foundation Plan" sheet.

———— Indicates existing structures

Standard Plan Sheet No.
Detail No.

ALL DIMENSIONS ARE IN METERS UNLESS OTHERWISE SHOWN

INDEX TO BRIDGE PLANS

SHEET NO.	TITLE
K1A	GENERAL PLAN
K5A	STRUCTURE PLAN
K9A	DECK CONTOURS
K13A	FOUNDATION PLAN
K118A	HINGE K CLOSURE DETAILS NO. 1
K119A	HINGE K CLOSURE DETAILS NO. 2
K120A	HINGE K CLOSURE DETAILS NO. 3
K121A	HINGE K CLOSURE DETAILS NO. 4
K122A	HINGE K CLOSURE DETAILS NO. 5
K123A	HINGE K CLOSURE DETAILS NO. 6
K124A	HINGE K CLOSURE DETAILS NO. 7
K124AA	HINGE K CLOSURE DETAILS NO. 7A
K125A	HINGE K CLOSURE DETAILS NO. 8
K126A	HINGE K CLOSURE DETAILS NO. 9
K127A	HINGE K CLOSURE DETAILS NO. 10
K128A	HINGE K CLOSURE DETAILS NO. 11
K129A	HINGE K CLOSURE DETAILS NO. 12
K130A	HINGE K CLOSURE DETAILS NO. 13
K131A	HINGE K CLOSURE DETAILS NO. 14
K132A	HINGE K CLOSURE DETAILS NO. 15
K148A	HINGE KE & KW EXPANSION JOINT DETAILS NO. 1
K149A	HINGE KE & KW EXPANSION JOINT DETAILS NO. 2
K150A	HINGE KE & KW EXPANSION JOINT DETAILS NO. 3
K151A	HINGE KE & KW EXPANSION JOINT DETAILS NO. 4
K152A	HINGE KE & KW EXPANSION JOINT DETAILS NO. 5
K153A	HINGE KE & KW EXPANSION JOINT DETAILS NO. 6
K154A	HINGE KE & KW EXPANSION JOINT DETAILS NO. 7
K155A	HINGE KE & KW EXPANSION JOINT DETAILS NO. 8
K156A	HINGE KE & KW EXPANSION JOINT DETAILS NO. 9
K156AA	HINGE KE & KW EXPANSION JOINT DETAILS NO. 10
K156BA	HINGE K PIPE BEAM DUST COVER DETAILS
K159A	FUTURE BIKE PATH DETAILS NO. 1
K161A	FUTURE BIKE PATH DETAILS NO. 2
K166A	CONCRETE BARRIER TYPE 732 (MOD)

SUPPLEMENTAL SHEET

CONTRACT CHANGE ORDER NO. _____
SHEET ____ OF ____

SAN FRANCISCO OAKLAND BAY BRIDGE
EAST SPAN SEISMIC SAFETY PROJECT

YBI TRANSITION STRUCTURES - HINGE K

STRUCTURE PLAN

DESIGN OVERSIGHT			
SIGN OFF DATE			
DESIGN	BY Desai	CHECKED Jain	
DETAILS	BY van Ryn/Zucchi/Mai	CHECKED Jain	
QUANTITIES	BY Liao	CHECKED E. Nichol	

PREPARED FOR THE STATE OF CALIFORNIA DEPARTMENT OF TRANSPORTATION

Jai Birdy
PROJECT ENGINEER

BRIDGE NO. 34-0006 L/R
KILOMETER POST 12.8

CU 04
EA 0120F1

Rev. Date: 5-18-98

ORIGINAL SCALE IN MILLIMETERS FOR REDUCED PLANS 0 10 20 30 40 50 60 70 80 90 100

DISREGARD PRINTS BEARING EARLIER REVISION DATES

REVISION DATES (PRELIMINARY STAGE ONLY)

SHEET K5A OF 209

FILE => P:\4141-06\CADD\TS\Checked Plans\YBITS #1-100% No. 2_03-03-08 (Final Renamed)\121911 Hinge K SAS T19 CCO\04-0120f1-34-006r1-c-sp01.dgn

USERNAME => FSamson DATE PLOTTED => 12/19/2011 TIME PLOTTED => 3:26:02 PM

Dec 19, 2011

DIST.	COUNTY	ROUTE	KILOMETER POST TOTAL PROJECT	SHEET NO.	TOTAL SHEETS
04	SF	80	12.7/13.2	K558A	806

Caltrans Metric

REGISTERED ENGINEER - CIVIL

PLANS APPROVAL DATE

REGISTERED PROFESSIONAL ENGINEER A.L. ELY No. 18880 Exp. 6-30-13 CIVIL STATE OF CALIFORNIA

The State of California or its officers or agents shall not be responsible for the accuracy or completeness of electronic copies of this plan sheet.

T.Y. LIN / MOFFATT & NICHOL
TWO HARRISON STREET
SAN FRANCISCO, CA 94105

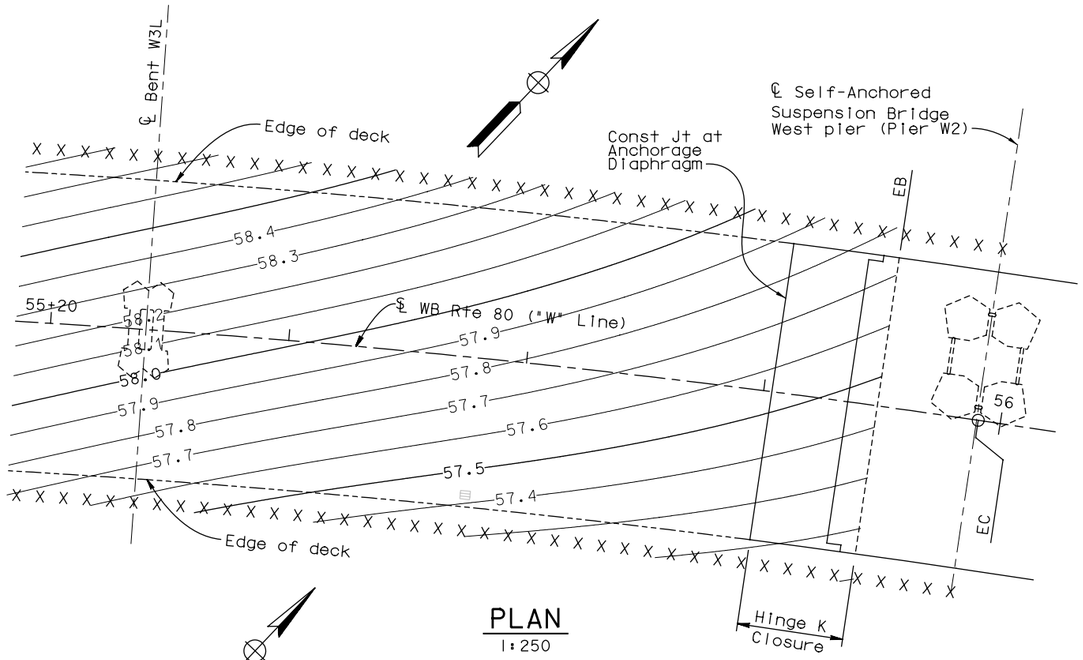

PLAN
1:250

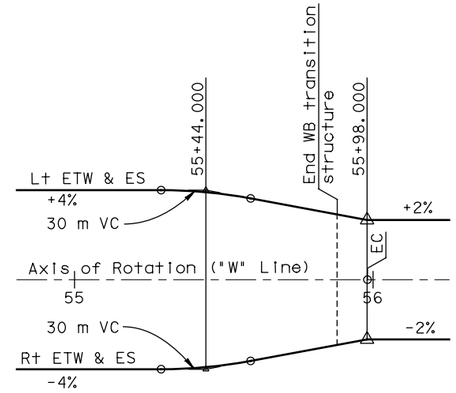

WESTBOUND SUPERELEVATION DIAGRAM
No Scale

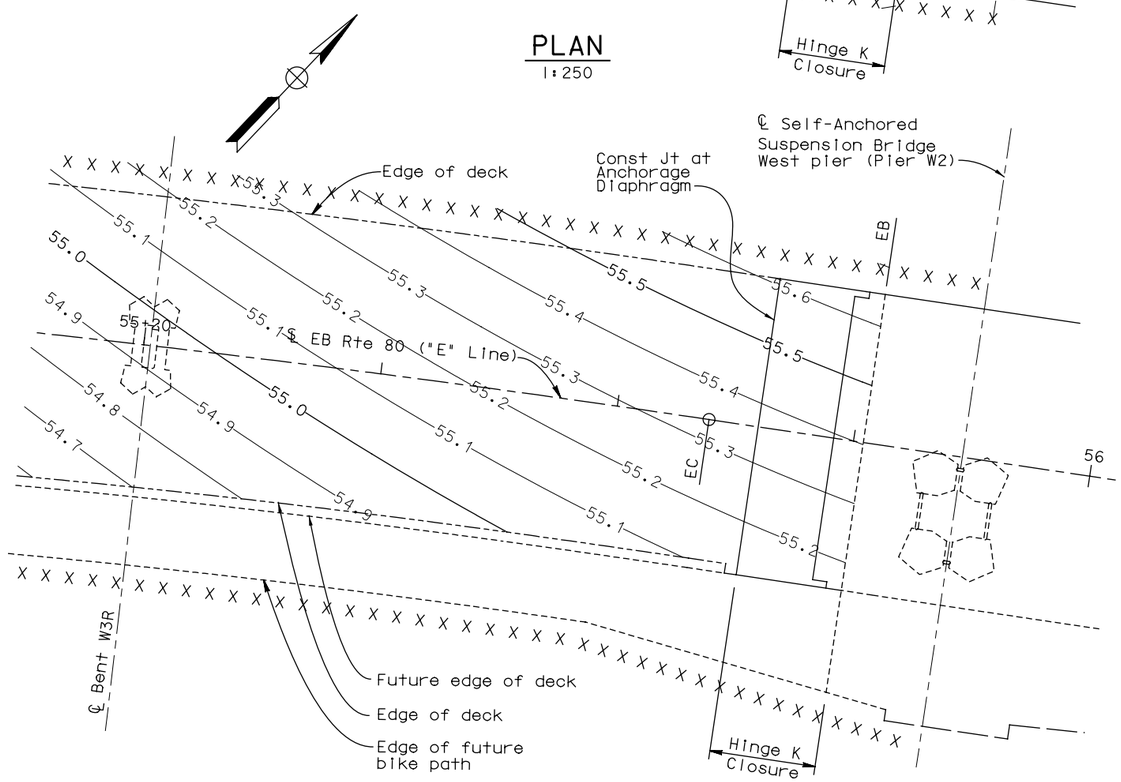

PLAN
1:250

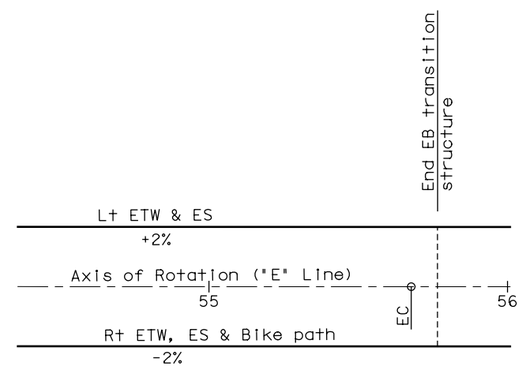

EASTBOUND SUPERELEVATION DIAGRAM
No Scale

NOTES:

Contours shown do not include camber.

X indicates 2 meter interval along "W" or "E" Line

Contour interval shown is 0.1 m.

GENERAL NOTES

Load Factor Design

Design: Caltrans Design Specifications-April 2000 (LFD)
(1996 AASHTO with Interims and revisions by Caltrans)

Dead Load: Includes 1675 N/m2 for future wearing surface on roadbed

Live Load: HS20-44 and alternative and permit design load

Bike Path Live Load: 4000 N/m2

Future Mass Transit Loading:

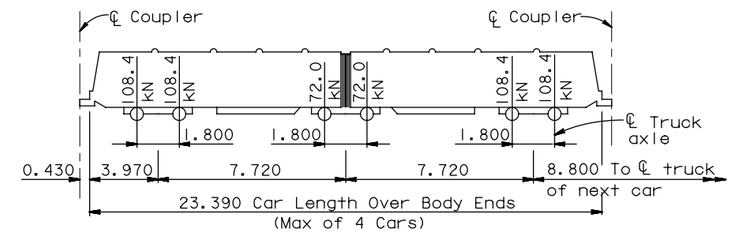

Seismic Loading: Refer to project specific seismic design criteria for San Francisco Oakland Bay Bridge East Span Seismic Safety Project Dated 01-08-00 See "Site Specific Response Spectra"

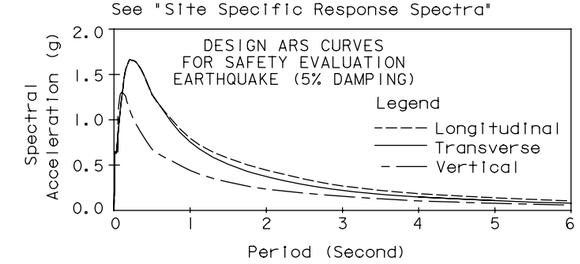

SITE SPECIFIC RESPONSE SPECTRA

Reinforced Concrete: Fy = 420 MPa
F'c = 46 MPa
N = 8

Transverse Deck Slabs
(Working Stress Design)
Fs = 140 MPa
Fc = 8 MPa
N = 10

ALL DIMENSIONS ARE IN METERS UNLESS OTHERWISE SHOWN

SAN FRANCISCO OAKLAND BAY BRIDGE
EAST SPAN SEISMIC SAFETY PROJECT

YBI TRANSITION STRUCTURES - HINGE K

DECK CONTOURS

DESIGN OVERSIGHT			
SIGN OFF DATE			
DESIGN	BY Alcaraz	CHECKED Desai	
DETAILS	BY van Ryn/Zucchi/Mai	CHECKED Jain	
QUANTITIES	BY Liao	CHECKED E. Nichol	

PREPARED FOR THE STATE OF CALIFORNIA DEPARTMENT OF TRANSPORTATION

Jai Birdy
PROJECT ENGINEER

BRIDGE NO. 34-0006 L/R
KILOMETER POST 12.8

Rev. Date: 5-18-98

ORIGINAL SCALE IN MILLIMETERS FOR REDUCED PLANS 0 10 20 30 40 50 60 70 80 90 100

CU 04
EA 0120F1

DISREGARD PRINTS BEARING EARLIER REVISION DATES

REVISION DATES (PRELIMINARY STAGE ONLY)

SHEET K9A OF 209

FILE => P:\4141-06\CADD\TS\Checked Plans\YBITS =1-100% No. 2_03-03-08 (Final Renamed)\121911 Hinge K SAS T19 CCO\04-0120f1-34-006r1-d-dc01.dgn

Dec 19, 2011

USERNAME => FSamson DATE PLOTTED => 12/19/2011 TIME PLOTTED => 3:26:14 PM

DIST.	COUNTY	ROUTE	KILOMETER POST TOTAL PROJECT	SHEET NO.	TOTAL SHEETS
04	SF	80	12.7/13.2	K562A	806

Caltrans Metric

REGISTERED ENGINEER - CIVIL

PLANS APPROVAL DATE

REGISTERED PROFESSIONAL ENGINEER A.L. ELY No. 18880 Exp. 6-30-13 CIVIL STATE OF CALIFORNIA

The State of California or its officers or agents shall not be responsible for the accuracy or completeness of electronic copies of this plan sheet.

T.Y. LIN / MOFFATT & NICHOL
TWO HARRISON STREET
SAN FRANCISCO, CA 94105

LEGEND

Denotes bottom of footing elevation

Denotes existing structure

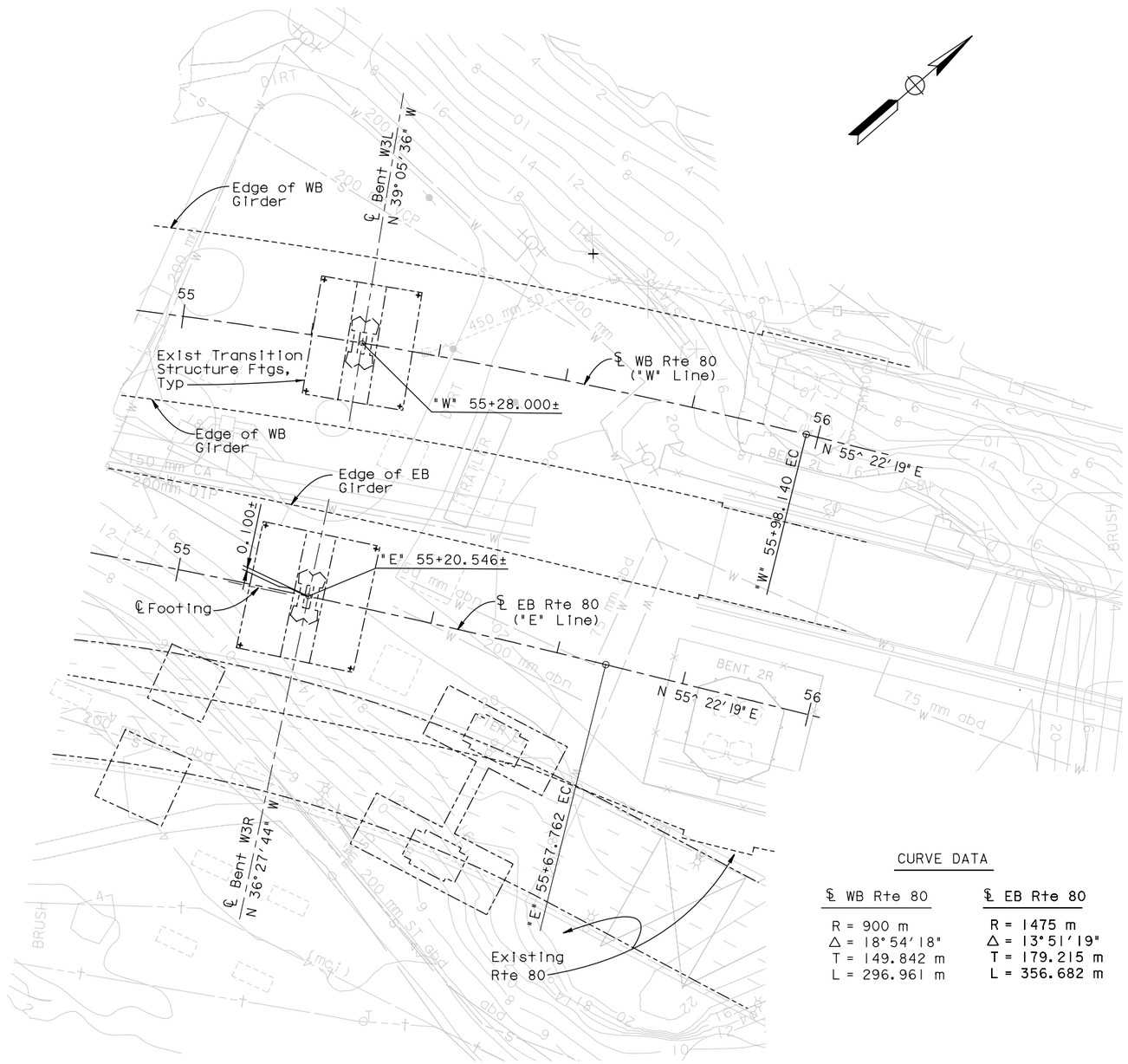

PARTIAL PLAN

1:400

CURVE DATA

℄ WB Rte 80	℄ EB Rte 80
R = 900 m	R = 1475 m
Δ = 18°54'18"	Δ = 13°51'19"
T = 149.842 m	T = 179.215 m
L = 296.961 m	L = 356.682 m

QUANTITIES

TEMPORARY COUNTERWEIGHT TIE-DOWN SYSTEM.....LUMP SUM
PREPARE CONCRETE BRIDGE DECK SURFACE..... m^2
STRUCTURAL CONCRETE, BRIDGE..... m^3
MINOR CONCRETE (CONCRETE BALLAST) (50MM)..... m^3
FURNISH POLYESTER CONCRETE OVERLAY.....38 m^3
PLACE POLYESTER CONCRETE OVERLAY (50MM).....765 m^2
INSTALL HINGE K BEARING ASSEMBLY.....4 EA
INSTALL SEISMIC JOINT (HINGE KW).....LUMP SUM
INSTALL SEISMIC JOINT (HINGE KE).....LUMP SUM
BAR REINFORCING STEEL (BRIDGE).....kg
HEADED BAR REINFORCEMENT.....EA
CLEAN AND PAINT STRUCTURAL STEEL.....LUMP SUM
(MISCELLANEOUS FACILITIES)
MISCELLANEOUS METAL (BRIDGE).....kg
CONCRETE BARRIER (TYPE 732 MODIFIED).....m

ALL DIMENSIONS ARE IN METERS UNLESS OTHERWISE SHOWN

GEOTECHNICAL/PROFESSIONAL APPROVAL DATE 3/3/08

Dec 19, 2011

DESIGN OVERSIGHT

SIGN OFF DATE

Rev. Date: 5-18-98

SCALE:	VERT. DATUM NGVD 29	HORZ. DATUM NAD 83
PHOTOGRAMMETRY AS OF:	ALIGNMENT TIES	
SURVEYED BY	DRAFTED BY	
FIELD CHECKED BY	CHECKED BY	

	BY	CHECKED
DESIGN	Desai	Jain
DETAILS	Van Ryn/Zucchi/Mai	Jain
QUANTITIES	Liao	E. Nichol

ORIGINAL SCALE IN MILLIMETERS FOR REDUCED PLANS 0 10 20 30 40 50 60 70 80 90 100

PREPARED FOR THE STATE OF CALIFORNIA DEPARTMENT OF TRANSPORTATION

Jai Birdy
PROJECT ENGINEER

CU 04
EA 0120F1

BRIDGE NO. 34-0006 L/R
KILOMETER POST 12.8

SAN FRANCISCO OAKLAND BAY BRIDGE
EAST SPAN SEISMIC SAFETY PROJECT

YBI TRANSITION STRUCTURES - HINGE K

FOUNDATION PLAN

DISREGARD PRINTS BEARING EARLIER REVISION DATES

REVISION DATES (PRELIMINARY STAGE ONLY)

SHEET K13A OF 209

USERNAME => FSamson DATE PLOTTED => 12/19/2011 TIME PLOTTED => 3:26:23 PM

FILE => P:\4141-06\CADD\TS\Checked Plans\YBITS #1-100% No. 2_03-03-08 (Final Renamed)\121911 Hinge K SAS T19 CCO\04-0120f1-34-006r1-e-fp101.dgn

Notes:
-Hinge K closure pour not to be placed until a min of 75 days after prestressing adjacent frame.

-At EB structure, bike path counterweight shall be placed prior to placement of Hinge K closure pour.

-Prior to placement of Hinge K closure concrete, counterweights shall be placed at the cantilever ends of the adjacent frames to balance a portion of the dead load reaction of the closure concrete (approx 13 300 KN). Center of gravity of counterweight to be located at station line for WB Structure and 625 mm south of station line for EB Structure. Counterweights to be removed after closure concrete has attained required strength and prior to falsework release.

-Concrete ballast within Hinge K closure shall be placed after Hinge K bearing assembly is grouted in final position.

SUPPLEMENTAL SHEET

CONTRACT CHANGE ORDER NO. _____
SHEET ____ OF ____

Caltrans Metric

DIST.	COUNTY	ROUTE	KILOMETER POST TOTAL PROJECT	SHEET NO.	TOTAL SHEETS
04	SF	80	12.7/13.2	K667A	806

REGISTERED ENGINEER - CIVIL

PLANS APPROVAL DATE

REGISTERED PROFESSIONAL ENGINEER A.L. ELY No. 18880 Exp. 6-30-13 CIVIL STATE OF CALIFORNIA

The State of California or its officers or agents shall not be responsible for the accuracy or completeness of electronic copies of this plan sheet.

T.Y. LIN / MOFFATT & NICHOL
TWO HARRISON STREET
SAN FRANCISCO, CA 94105

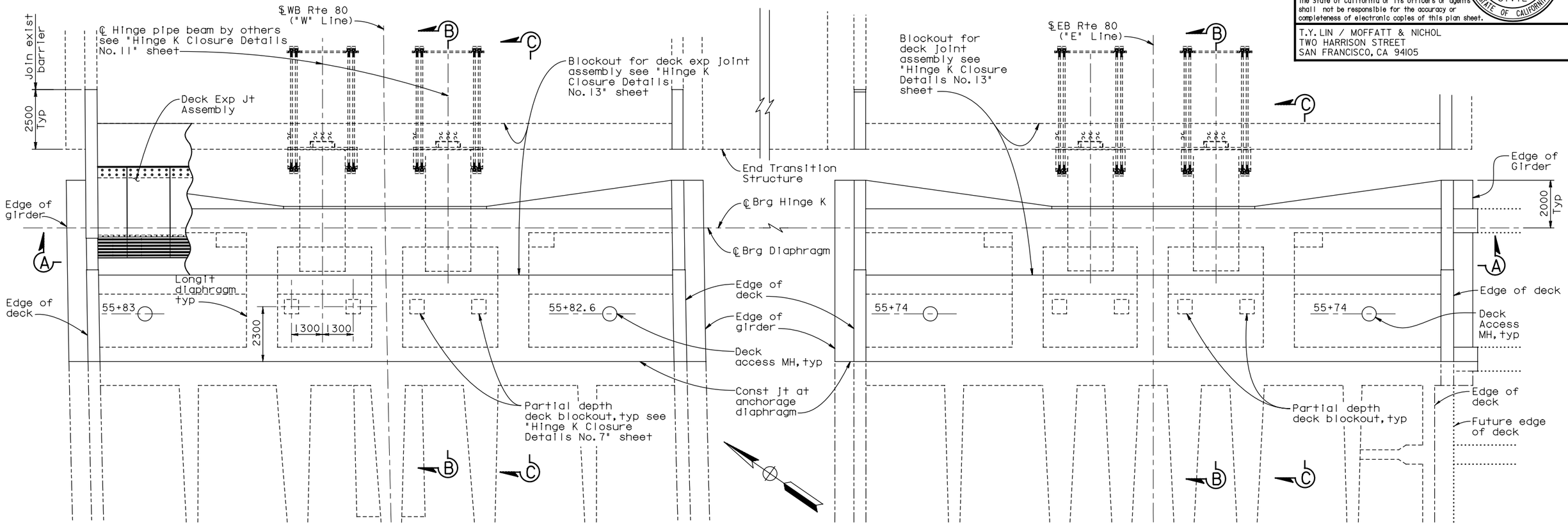

PLAN
1:80

Note: For Sections B-B & C-C see "Hinge K Closure Details No. 2" sheet.

** Indicates dimension measured at ℄ Brg Hinge K

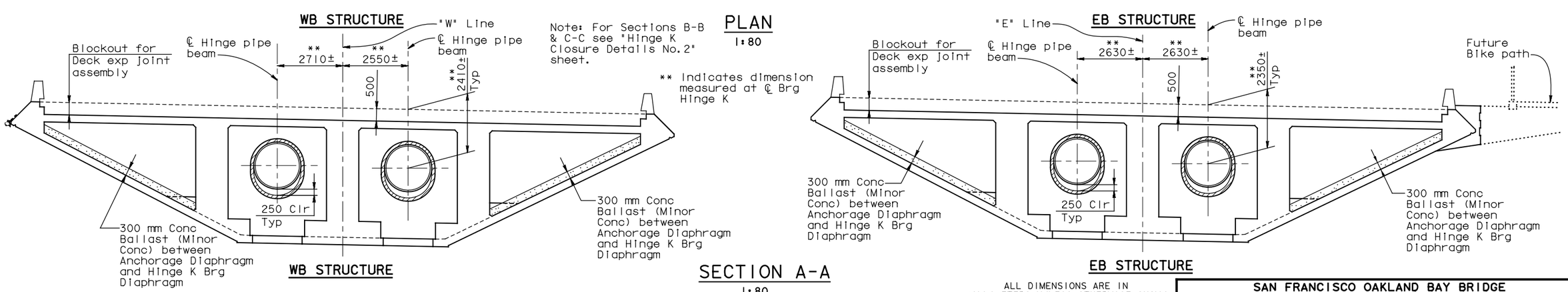

SECTION A-A
1:80

ALL DIMENSIONS ARE IN MILLIMETERS UNLESS OTHERWISE SHOWN

SAN FRANCISCO OAKLAND BAY BRIDGE
EAST SPAN SEISMIC SAFETY PROJECT

YBI TRANSITION STRUCTURES - HINGE K

HINGE K CLOSURE DETAILS NO. 1

DESIGN OVERSIGHT		DESIGN	BY Lee	CHECKED Atiqullah	PREPARED FOR THE STATE OF CALIFORNIA DEPARTMENT OF TRANSPORTATION	Jal Birdy PROJECT ENGINEER	BRIDGE NO. 34-0006 L/R
SIGN OFF DATE		DETAILS	BY van Ryn/Zucchi/Mai	CHECKED Jain			KILOMETER POST 12.8
		QUANTITIES	BY Liao	CHECKED E. Nichol			

Rev. Date: 5-18-98

ORIGINAL SCALE IN MILLIMETERS FOR REDUCED PLANS 0 10 20 30 40 50 60 70 80 90 100

CU 04
EA 0120F1

DISREGARD PRINTS BEARING EARLIER REVISION DATES

REVISION DATES (PRELIMINARY STAGE ONLY)

SHEET K118A OF 209

Dec 19, 2011

USERNAME => FSamson DATE PLOTTED => 12/19/2011 TIME PLOTTED => 3:26:34 PM

FILE => P:\4141-06\CADD\TS\Checked Plans\YBITS #1-100% No. 2_03-03-08 (Final Renamed)\121911 Hinge K SAS T19 CCO\04-0120f1-34-006r1-n-hingedt01.dgn

DIST.	COUNTY	ROUTE	KILOMETER POST TOTAL PROJECT	SHEET NO.	TOTAL SHEETS
04	SF	80	12.7/13.2	K668A	806

Caltrans Metric

REGISTERED ENGINEER - CIVIL

PLANS APPROVAL DATE

REGISTERED PROFESSIONAL ENGINEER A.L. ELY No. 18880 Exp. 6-30-13 CIVIL STATE OF CALIFORNIA

The State of California or its officers or agents shall not be responsible for the accuracy or completeness of electronic copies of this plan sheet.

T.Y. LIN / MOFFATT & NICHOL
TWO HARRISON STREET
SAN FRANCISCO, CA 94105

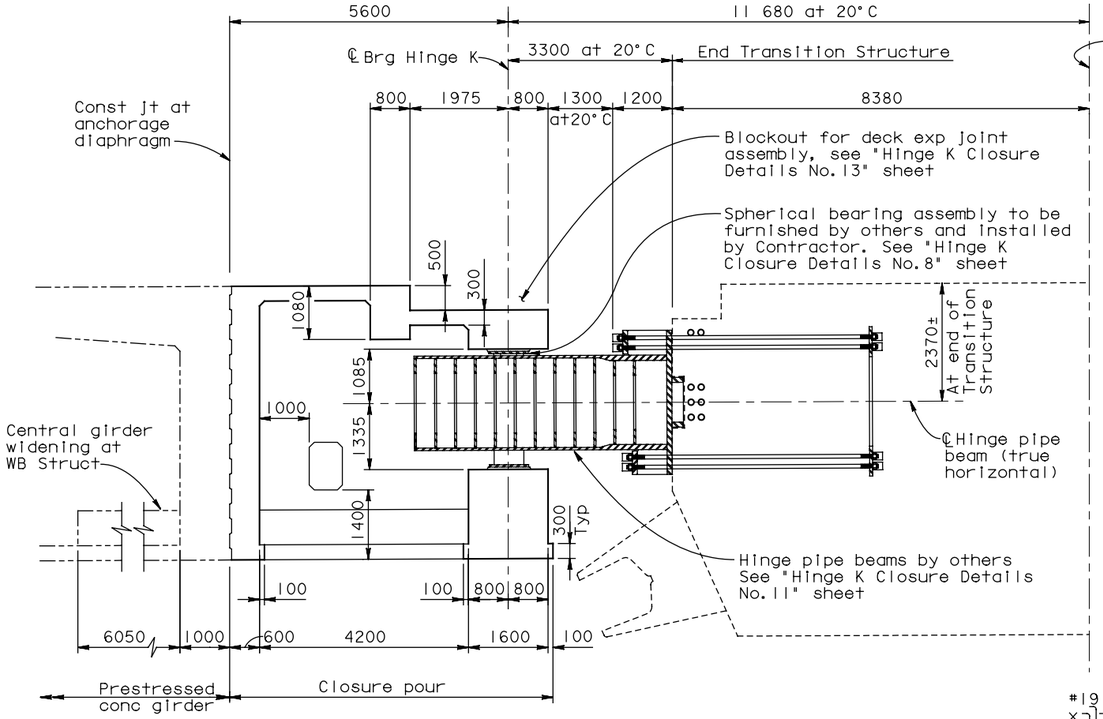

SECTION B-B - ADJACENT TO CENTRAL LONGIT DIAPHRAGM

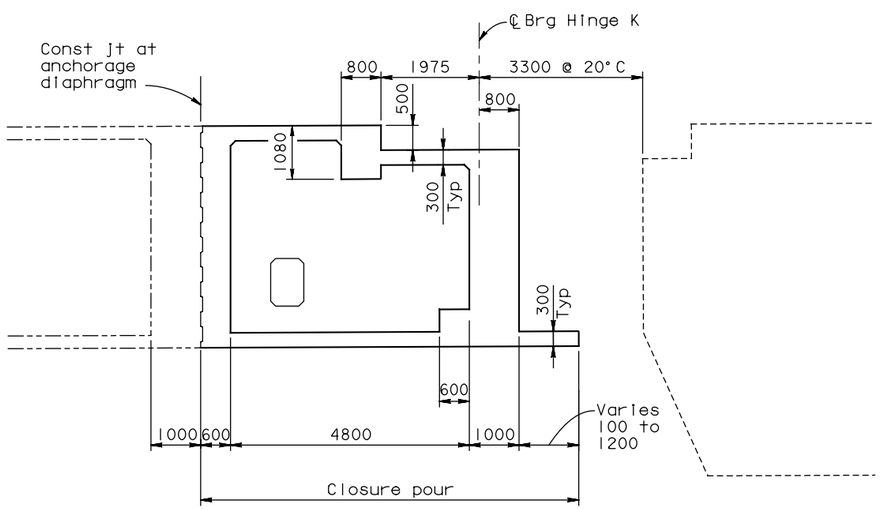

SECTION C-C - ADJACENT TO OUTER LONGIT DIAPHRAGM

LONGITUDINAL SECTIONS AT HINGE K CLOSURE

1:60

Note: For locations of Sections B-B & C-C see "Hinge K Closure Details No. 1" sheet

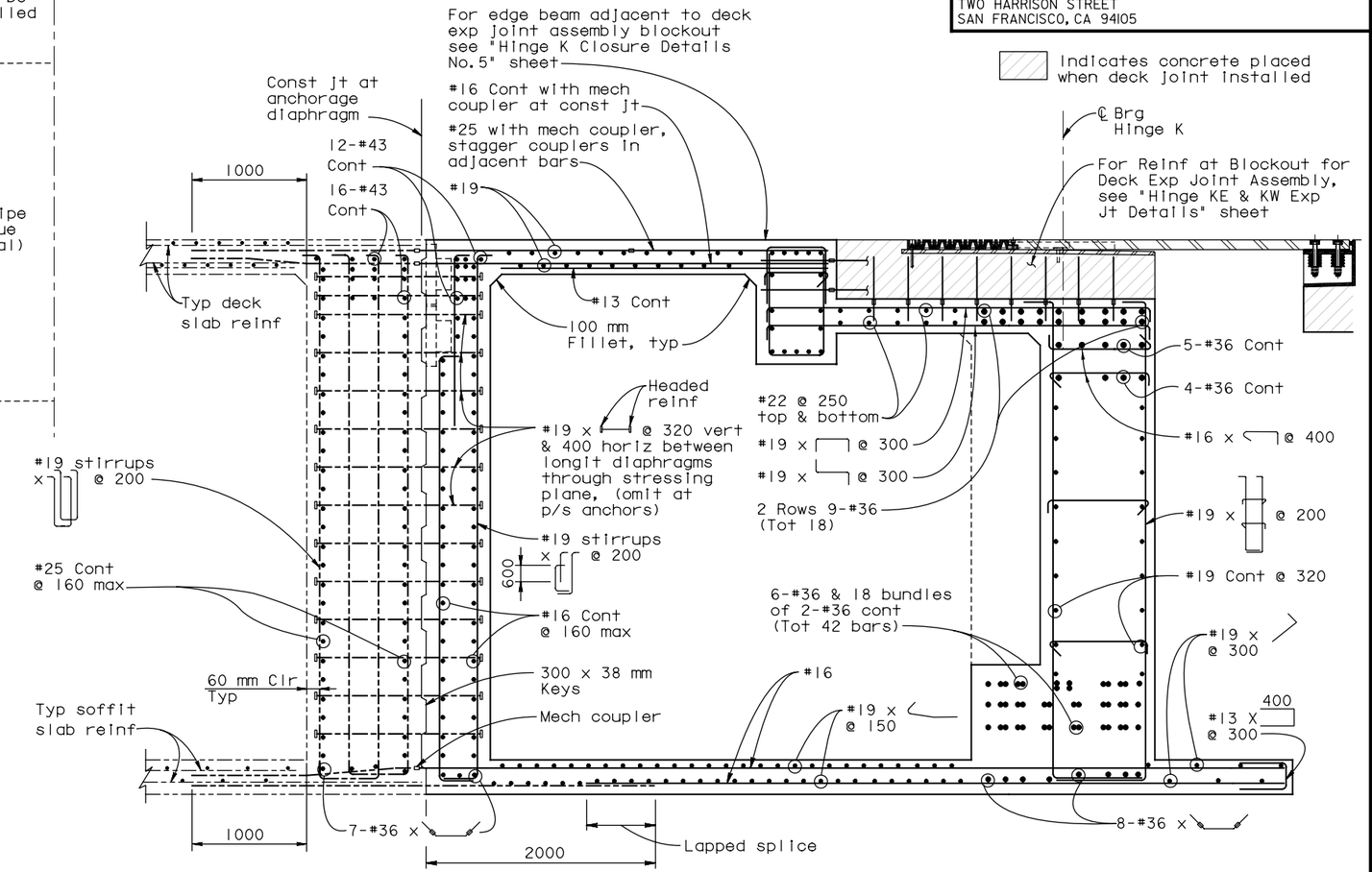

LONGITUDINAL SECTION REINFORCEMENT

(Shown adjacent to outer longit diaphragm)

1:25

SUPPLEMENTAL SHEET

CONTRACT CHANGE ORDER NO. _____
SHEET ____ OF ____

ALL DIMENSIONS ARE IN MILLIMETERS UNLESS OTHERWISE SHOWN

SAN FRANCISCO OAKLAND BAY BRIDGE
EAST SPAN SEISMIC SAFETY PROJECT

YBI TRANSITION STRUCTURES - HINGE K

HINGE K CLOSURE DETAILS NO. 2

DESIGN OVERSIGHT			
SIGN OFF DATE			
Rev. Date: 5-18-98			

	BY	CHECKED
DESIGN	Lee	Atiqullah
DETAILS	van Ryn/Zucchi/Mai	Jain
QUANTITIES	Liao	E. Nichol

PREPARED FOR THE STATE OF CALIFORNIA DEPARTMENT OF TRANSPORTATION

Jal Birdy
PROJECT ENGINEER

BRIDGE NO. 34-0006 L/R
KILOMETER POST 12.8

ORIGINAL SCALE IN MILLIMETERS FOR REDUCED PLANS 0 10 20 30 40 50 60 70 80 90 100

CU 04
EA 0120F1

DISREGARD PRINTS BEARING EARLIER REVISION DATES

REVISION DATES (PRELIMINARY STAGE ONLY)

SHEET K119A OF 209

FILE => P:\4141-06\CADD\TS\Checked Plans\YBITS #1-100% No. 2_03-03-08 (Final Renamed)\121911 Hinge K SAS T19 CCO\04-0120f1-34-006r1-n-hinged+02.dgn

Dec 19, 2011

USERNAME => FSamson DATE PLOTTED => 12/19/2011 TIME PLOTTED => 3:26:43 PM

DIST.	COUNTY	ROUTE	KILOMETER POST TOTAL PROJECT	SHEET NO.	TOTAL SHEETS
04	SF	80	12.7/13.2	K669A	806

Caltrans Metric

REGISTERED ENGINEER - CIVIL

PLANS APPROVAL DATE

REGISTERED PROFESSIONAL ENGINEER A.L. ELY No. 18880 Exp. 6-30-13 CIVIL STATE OF CALIFORNIA

The State of California or its officers or agents shall not be responsible for the accuracy or completeness of electronic copies of this plan sheet.

T.Y. LIN / MOFFATT & NICHOL
TWO HARRISON STREET
SAN FRANCISCO, CA 94105

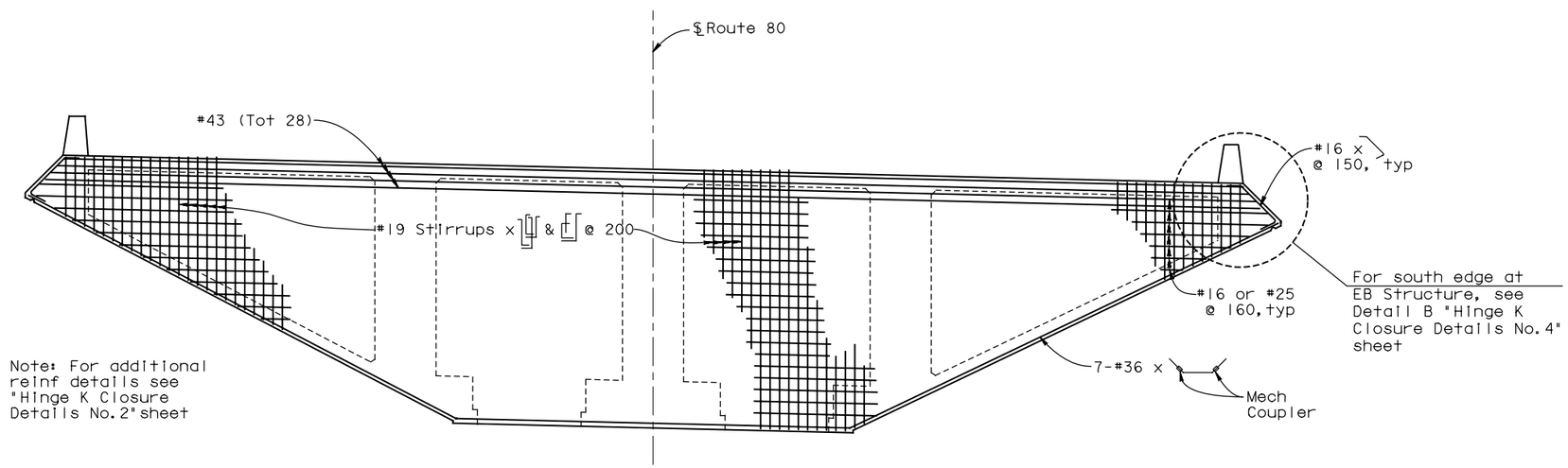

ELEVATION HINGE K CLOSURE ANCHORAGE DIAPHRAGM

(WB Structure shown, EB Structure similar except as noted)

1:60

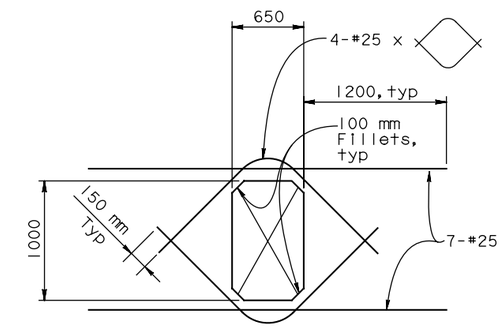

LONGIT DIAPHRAGM ACCESS OPENING

1:25

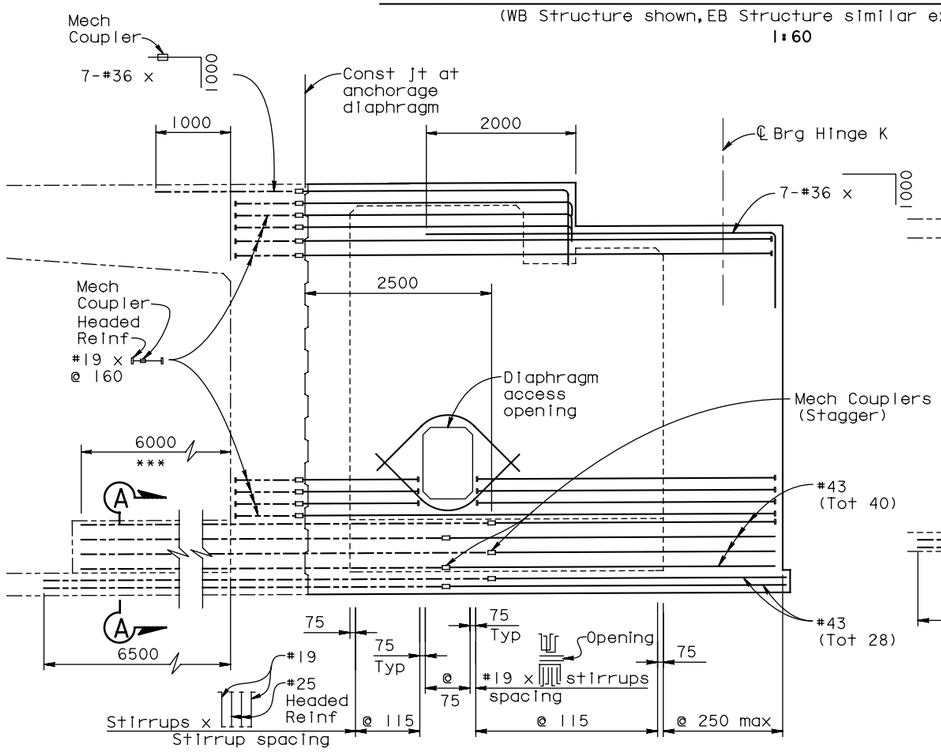

ELEVATION - CENTRAL LONGIT DIAPHRAGM

1:40

*** At EB Structure bend #43 bars as required to align bars with girder web.

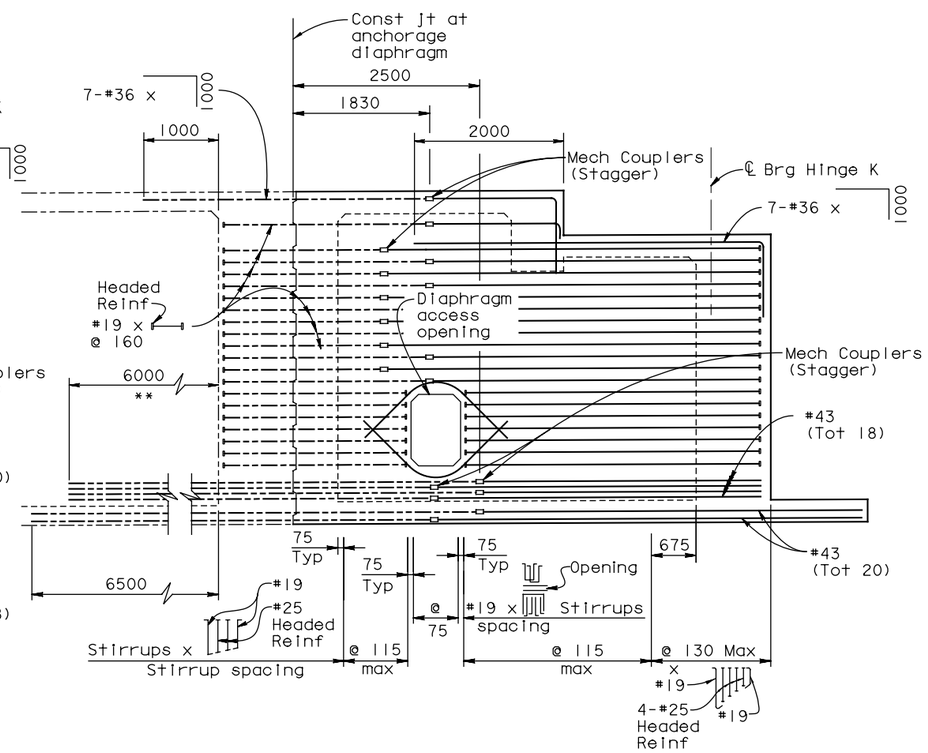

ELEVATION - OUTER LONGIT DIAPHRAGM

1:40

** Bend #43 bars as required to align bars with girder web.

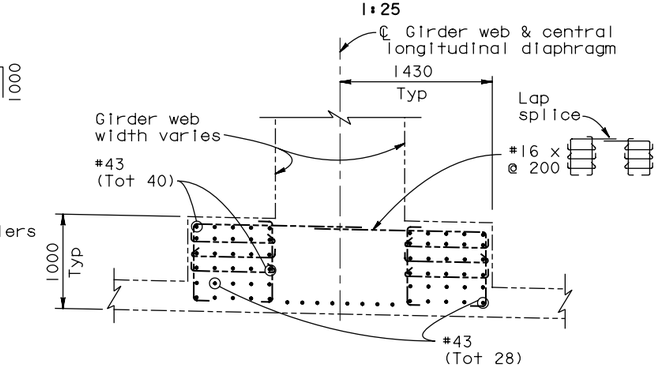

SECTION A-A

(Applicable at central longitudinal diaphragm for WB Structure only)

1:30

SUPPLEMENTAL SHEET

CONTRACT CHANGE ORDER NO. _____
SHEET ____ OF ____

ALL DIMENSIONS ARE IN MILLIMETERS UNLESS OTHERWISE SHOWN

SAN FRANCISCO OAKLAND BAY BRIDGE
EAST SPAN SEISMIC SAFETY PROJECT

YBI TRANSITION STRUCTURES - HINGE K

HINGE K CLOSURE DETAILS NO. 3

DESIGN OVERSIGHT			
SIGN OFF DATE			
DESIGN	BY Lee	CHECKED Atiqullah	
DETAILS	BY van Ryn/Zucchi/Mai	CHECKED Jain	
QUANTITIES	BY Liao	CHECKED E. Nichol	

PREPARED FOR THE STATE OF CALIFORNIA DEPARTMENT OF TRANSPORTATION

Jal Birdy
PROJECT ENGINEER

BRIDGE NO. 34-0006 L/R
KILOMETER POST 12.8

CU 04
EA 0120F1

DISREGARD PRINTS BEARING EARLIER REVISION DATES

REVISION DATES (PRELIMINARY STAGE ONLY)

SHEET K120A OF 209

Rev. Date: 5-18-98

ORIGINAL SCALE IN MILLIMETERS FOR REDUCED PLANS 0 10 20 30 40 50 60 70 80 90 100

FILE => P:\4141-06\CADD\TS\Checked Plans\YBITS #1-100% No. 2_03-03-08 (Final Renamed)\121911 Hinge K SAS T19 CCO\04-0120f1-34-006r1-n-hingedt03.dgn

Dec 19, 2011

USERNAME => FSamson DATE PLOTTED => 12/19/2011 TIME PLOTTED => 3:26:54 PM

DIST.	COUNTY	ROUTE	KILOMETER POST TOTAL PROJECT	SHEET NO.	TOTAL SHEETS
04	SF	80	12.7/13.2	K670A	806

REGISTERED ENGINEER - CIVIL

PLANS APPROVAL DATE

REGISTERED PROFESSIONAL ENGINEER A.L. ELY No. 18880 Exp. 6-30-13 CIVIL STATE OF CALIFORNIA

The State of California or its officers or agents shall not be responsible for the accuracy or completeness of electronic copies of this plan sheet.

T.Y. LIN / MOFFATT & NICHOL
TWO HARRISON STREET
SAN FRANCISCO, CA 94105

Caltrans Metric

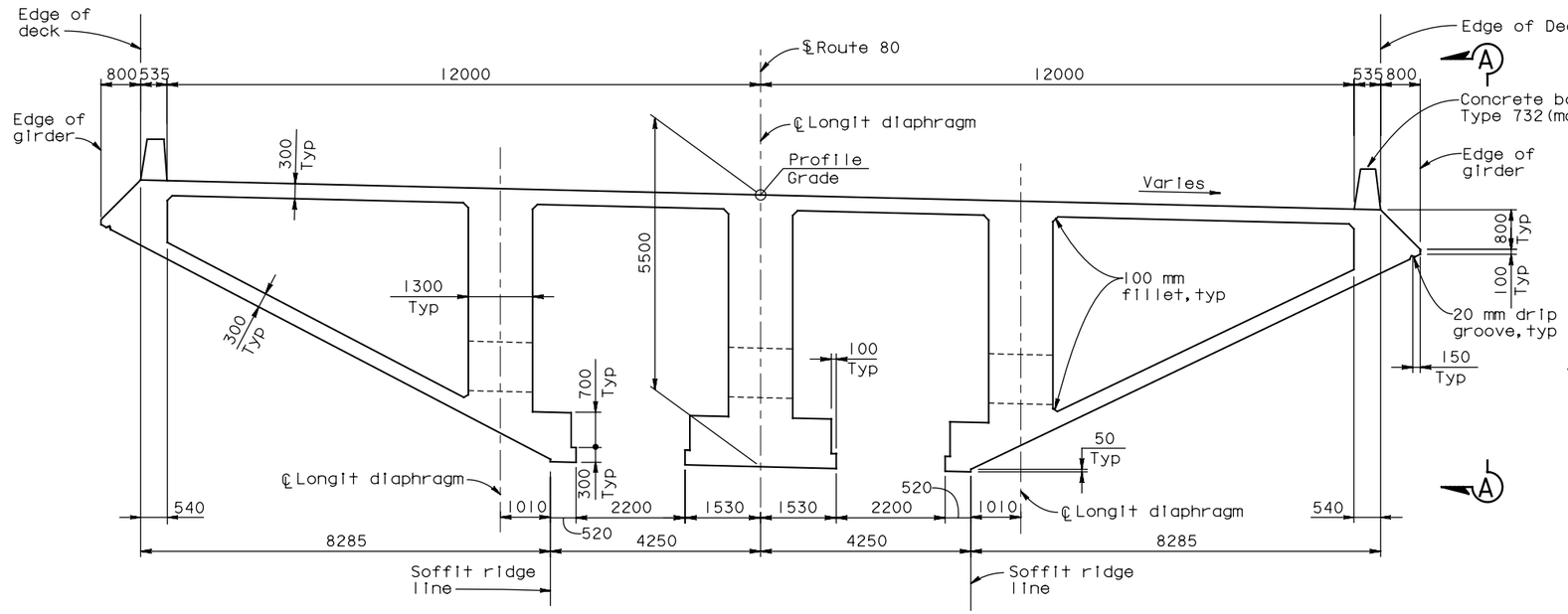

TYPICAL SECTION AT HINGE K CLOSURE

(WB Structure shown, EB Structure similar except as noted)

1:60

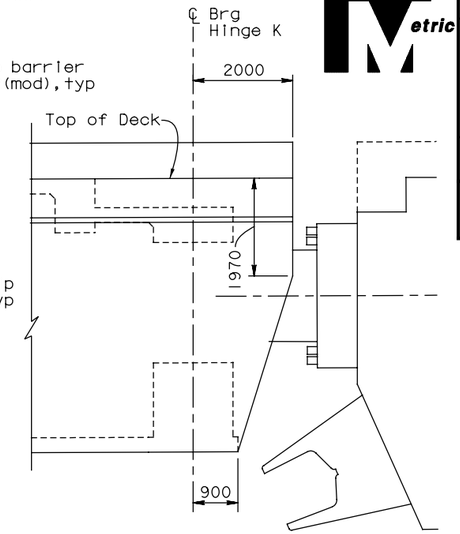

ELEVATION A-A

1:60

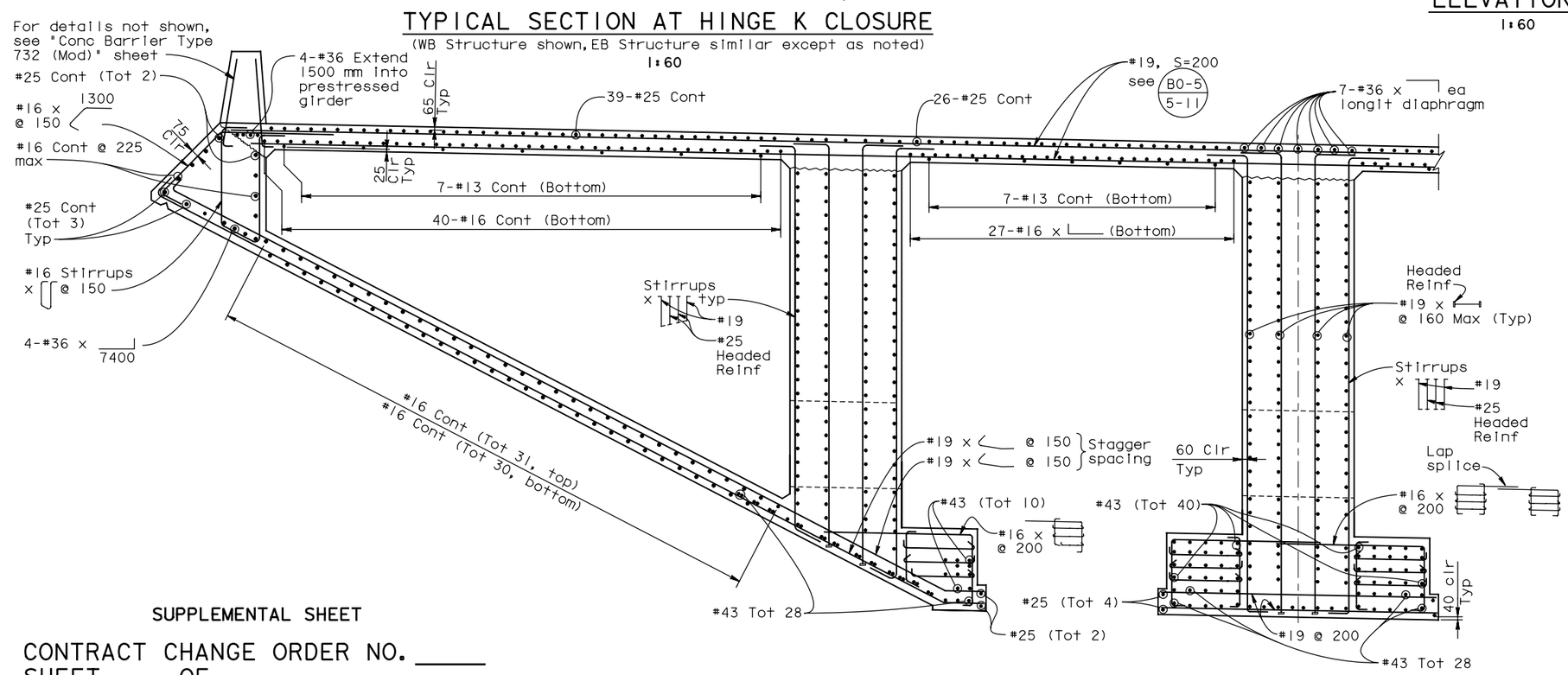

PARTIAL TYPICAL SECTION

1:30

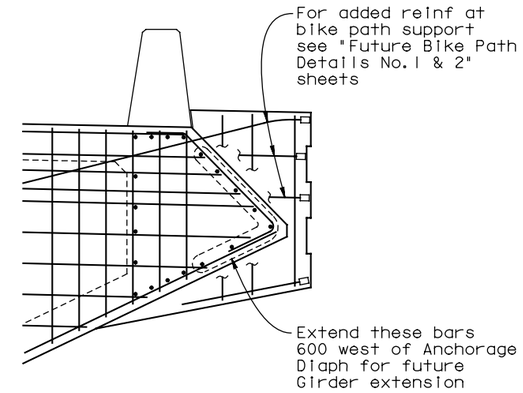

SOUTH EDGE EB STRUCTURE AT ANCHORAGE DIAPHRAGM

DETAIL B

1:25

Note: For location of Detail B see "Hinge K Closure Details No.3" sheet.

SUPPLEMENTAL SHEET

CONTRACT CHANGE ORDER NO. _____
SHEET ____ OF ____

ALL DIMENSIONS ARE IN MILLIMETERS UNLESS OTHERWISE SHOWN

SAN FRANCISCO OAKLAND BAY BRIDGE
EAST SPAN SEISMIC SAFETY PROJECT

YBI TRANSITION STRUCTURES - HINGE K

HINGE K CLOSURE DETAILS NO. 4

DESIGN OVERSIGHT			
SIGN OFF DATE			
DESIGN	BY Lee	CHECKED Atiqullah	
DETAILS	BY van Ryn/Zucchi/Mai	CHECKED Jain	
QUANTITIES	BY Liao	CHECKED E. Nichol	

PREPARED FOR THE STATE OF CALIFORNIA DEPARTMENT OF TRANSPORTATION

Jai Birdy
PROJECT ENGINEER

BRIDGE NO. 34-0006 L/R
KILOMETER POST 12.8

Rev. Date: 5-18-98

ORIGINAL SCALE IN MILLIMETERS FOR REDUCED PLANS 0 10 20 30 40 50 60 70 80 90 100

CU 04
EA 0120F1

DISREGARD PRINTS BEARING EARLIER REVISION DATES

REVISION DATES (PRELIMINARY STAGE ONLY)

SHEET K121A OF 209

FILE => P:\4141-06\CADD\TS\Checked Plans\YBITS #1-100% No. 2_03-03-08 (Final Renamed)\121911 Hinge K SAS T19 CCO\04-0120f1-34-006r1-n-hingedt04.dgn

Dec 19, 2011

USERNAME => FSamson DATE PLOTTED => 12/19/2011 TIME PLOTTED => 3:27:04 PM

DIST.	COUNTY	ROUTE	KILOMETER POST TOTAL PROJECT	SHEET NO.	TOTAL SHEETS
04	SF	80	12.7/13.2	K671A	806

Caltrans Metric

REGISTERED ENGINEER - CIVIL

PLANS APPROVAL DATE

REGISTERED PROFESSIONAL ENGINEER A.L. ELY No. 18880 Exp. 6-30-13 CIVIL STATE OF CALIFORNIA

The State of California or its officers or agents shall not be responsible for the accuracy or completeness of electronic copies of this plan sheet.

T.Y. LIN / MOFFATT & NICHOL
TWO HARRISON STREET
SAN FRANCISCO, CA 94105

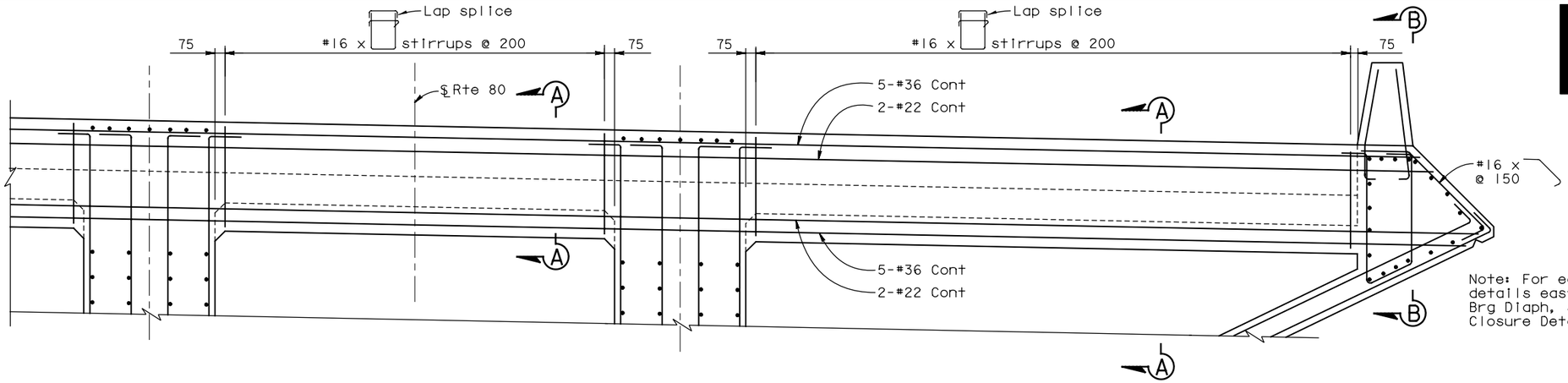

Note: For edge of deck details east of Hinge K Brg Diaph, see "Hinge K Closure Details No.7" sheet.

PARTIAL ELEVATION EDGE BEAM ADJACENT TO EXPANSION JOINT ASSEMBLY BLOCKOUT

1:25

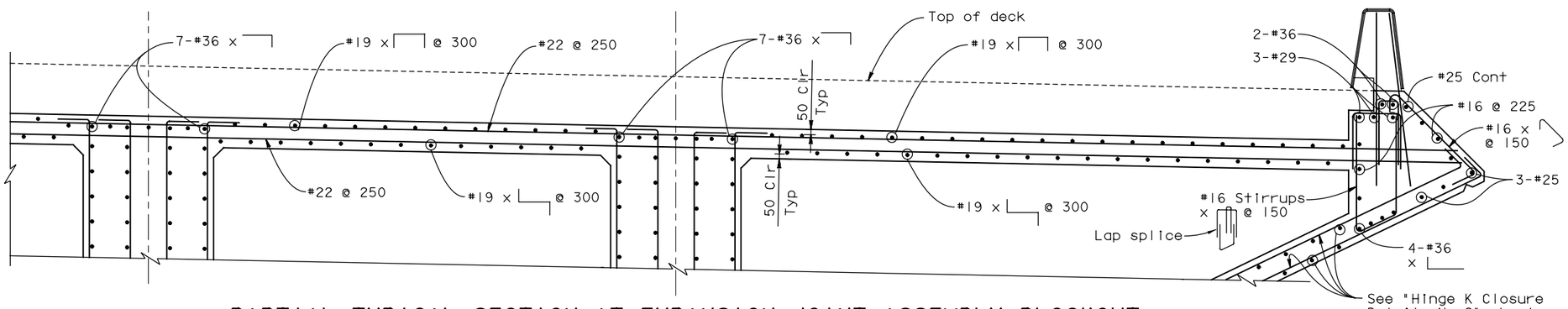

Note: For reinf at blockout for deck exp joint assembly, see "Hinge KE & KW Expansion Joint Details" sheet.

PARTIAL TYPICAL SECTION AT EXPANSION JOINT ASSEMBLY BLOCKOUT

1:25

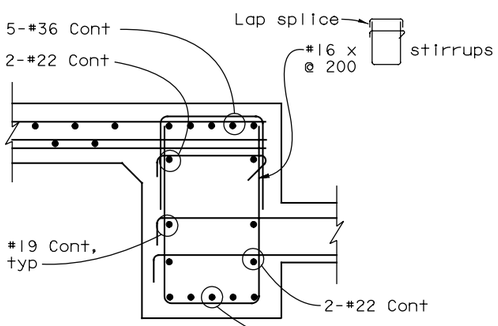

SECTION A-A

1:15

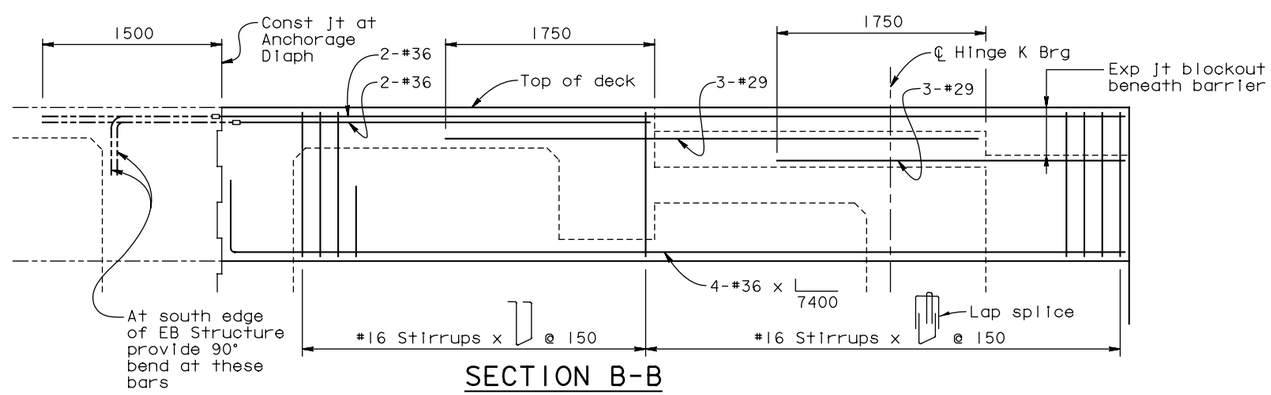

SECTION B-B

1:25

SUPPLEMENTAL SHEET

CONTRACT CHANGE ORDER NO. _____
SHEET ____ OF ____

ALL DIMENSIONS ARE IN MILLIMETERS UNLESS OTHERWISE SHOWN

SAN FRANCISCO OAKLAND BAY BRIDGE
EAST SPAN SEISMIC SAFETY PROJECT

YBI TRANSITION STRUCTURES - HINGE K

HINGE K CLOSURE DETAILS NO.5

DESIGN OVERSIGHT			
SIGN OFF DATE			
Rev. Date: 5-18-98			

	BY	CHECKED
DESIGN	Lee	Wang
DETAILS	van Ryn/Zucchi/Mai	Jain
QUANTITIES	Liao	E. Nichol

PREPARED FOR THE STATE OF CALIFORNIA DEPARTMENT OF TRANSPORTATION

Jai Birdy
PROJECT ENGINEER

BRIDGE NO. 34-0006 L/R
KILOMETER POST 12.8

ORIGINAL SCALE IN MILLIMETERS FOR REDUCED PLANS 0 10 20 30 40 50 60 70 80 90 100

CU 04
EA 0120F1

DISREGARD PRINTS BEARING EARLIER REVISION DATES

REVISION DATES (PRELIMINARY STAGE ONLY)

SHEET K122A OF 209

FILE => P:\4141-06\CADD\TS\Checked Plans\YBITS #1-100% No. 2_03-03-08 (Final Renamed)\121911 Hinge K SAS T19 CCO\04-0120f1-34-006r1-n-hingedt05.dgn

Dec 19, 2011

USERNAME => FSamson DATE PLOTTED => 12/19/2011 TIME PLOTTED => 3:27:14 PM

DIST.	COUNTY	ROUTE	KILOMETER POST TOTAL PROJECT	SHEET NO.	TOTAL SHEETS
04	SF	80	12.7/13.2	K672A	806

Caltrans Metric

REGISTERED ENGINEER - CIVIL

PLANS APPROVAL DATE

REGISTERED PROFESSIONAL ENGINEER A.L. ELY No. 18880 Exp. 6-30-13 CIVIL STATE OF CALIFORNIA

The State of California or its officers or agents shall not be responsible for the accuracy or completeness of electronic copies of this plan sheet.

T.Y. LIN / MOFFATT & NICHOL
TWO HARRISON STREET
SAN FRANCISCO, CA 94105

SUPPLEMENTAL SHEET

CONTRACT CHANGE ORDER NO. _____
SHEET ____ OF ____

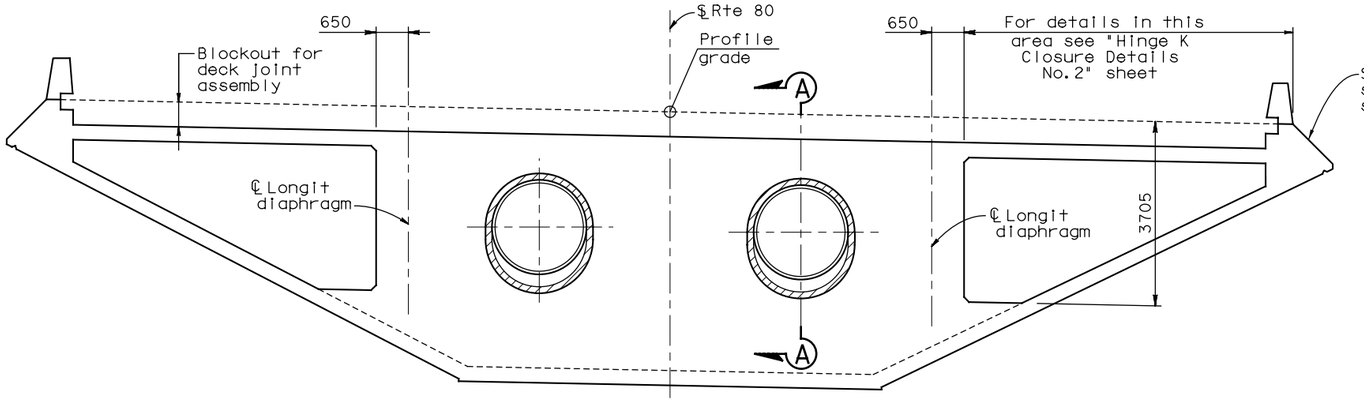

ELEVATION HINGE K BEARING DIAPHRAGM

(WB Structure shown, EB Structure similar except as noted)

1:60

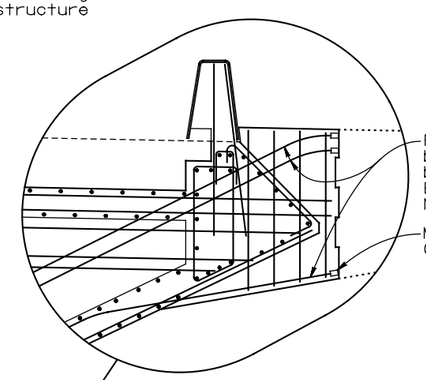

SOUTH EDGE AT EB STRUCTURE

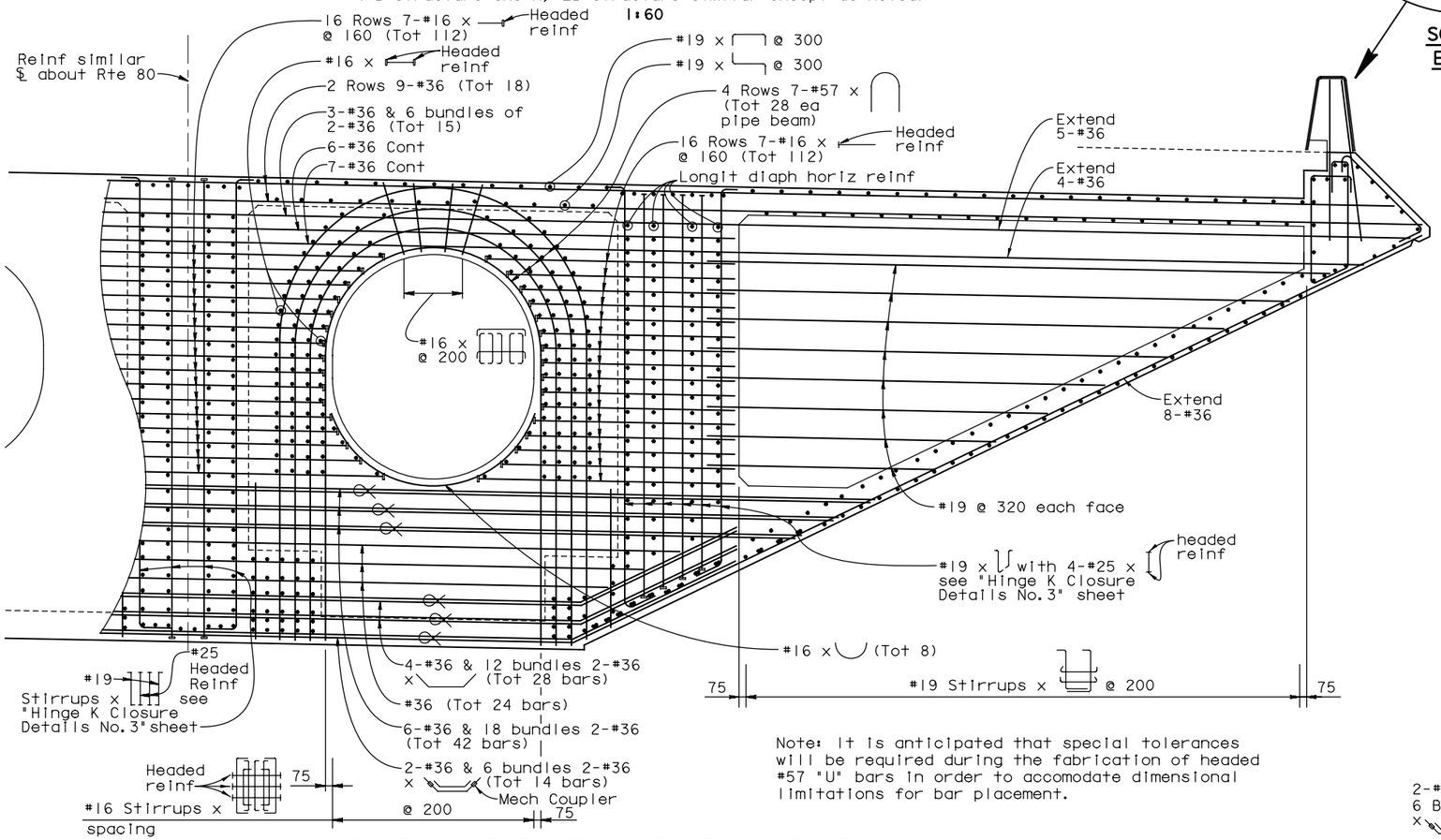

Note: It is anticipated that special tolerances will be required during the fabrication of headed #57 "U" bars in order to accomodate dimensional limitations for bar placement.

PARTIAL ELEVATION BEARING DIAPHRAGM

1:30

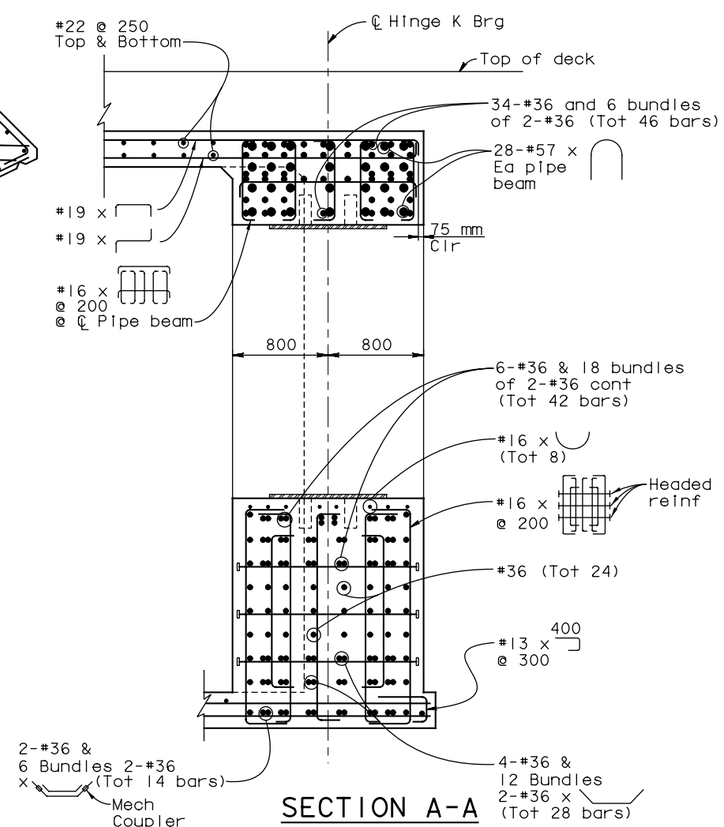

SECTION A-A

1:25

ALL DIMENSIONS ARE IN MILLIMETERS UNLESS OTHERWISE SHOWN

SAN FRANCISCO OAKLAND BAY BRIDGE
EAST SPAN SEISMIC SAFETY PROJECT

YBI TRANSITION STRUCTURES - HINGE K

HINGE K CLOSURE DETAILS NO. 6

DESIGN OVERSIGHT			
SIGN OFF DATE			
DESIGN	BY Lee	CHECKED Wang	
DETAILS	BY van Ryn/Zucchi/Mai	CHECKED Jain	
QUANTITIES	BY Liao	CHECKED E. Nichol	

PREPARED FOR THE STATE OF CALIFORNIA DEPARTMENT OF TRANSPORTATION

Jal Birdy
PROJECT ENGINEER

BRIDGE NO. 34-0006 L/R
KILOMETER POST 12.8

CU 04
EA 0120F1

Rev. Date: 5-18-98

ORIGINAL SCALE IN MILLIMETERS FOR REDUCED PLANS 0 10 20 30 40 50 60 70 80 90 100

DISREGARD PRINTS BEARING EARLIER REVISION DATES

REVISION DATES (PRELIMINARY STAGE ONLY)

SHEET K123A OF 209

FILE => P:\4141-06\CADD\TS\Checked Plans\YBITS #1-100% No. 2_03-03-08 (Final Renamed)\121911 Hinge K SAS T19 CCO\04-0120f1-34-006r1-n-hingedt06.dgn

USERNAME => FSamson DATE PLOTTED => 12/19/2011 TIME PLOTTED => 3:27:25 PM

Dec 19, 2011

DIST.	COUNTY	ROUTE	KILOMETER POST TOTAL PROJECT	SHEET NO.	TOTAL SHEETS
04	SF	80	12.7/13.2	K673A	806

Caltrans Metric

REGISTERED ENGINEER - CIVIL

PLANS APPROVAL DATE

REGISTERED PROFESSIONAL ENGINEER A.L. ELY No. 18880 Exp. 6-30-13 CIVIL STATE OF CALIFORNIA

The State of California or its officers or agents shall not be responsible for the accuracy or completeness of electronic copies of this plan sheet.

T.Y. LIN / MOFFATT & NICHOL
TWO HARRISON STREET
SAN FRANCISCO, CA 94105

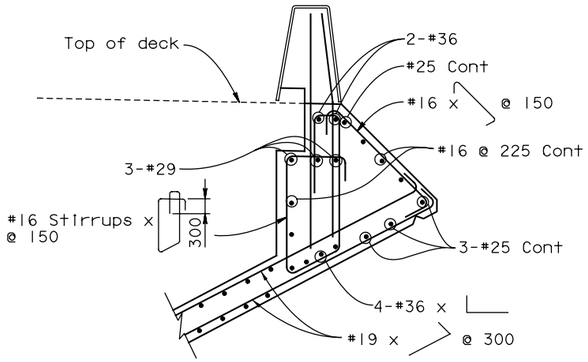

EDGE OF DECK DETAIL EAST OF HINGE K BEARING DIAPHRAGM

1:25

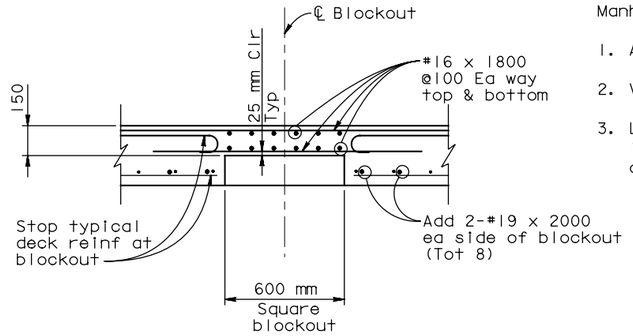

PARTIAL DEPTH DECK BLOCKOUT DETAIL

(For location see "Hinge K Closure Details No.1" sheet)

1:15

Manhole Ladder Notes:

1. All metal, including fasteners, shall be galvanized.
2. Verify all dimensions in the field prior to fabrication.
3. Ladders shall be provided for all deck access openings. In Westbound and Eastbound structures at Hinge K closure.

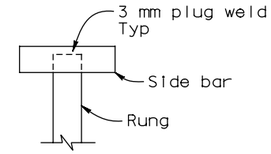

DETAIL 1

1:2

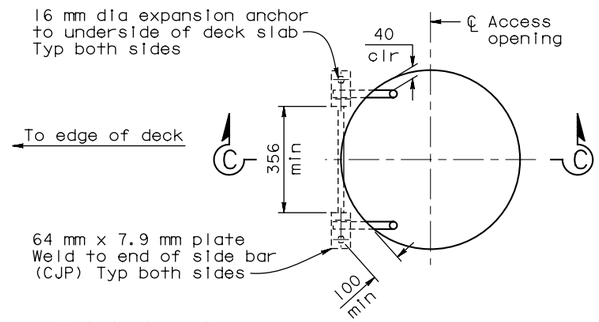

PLAN

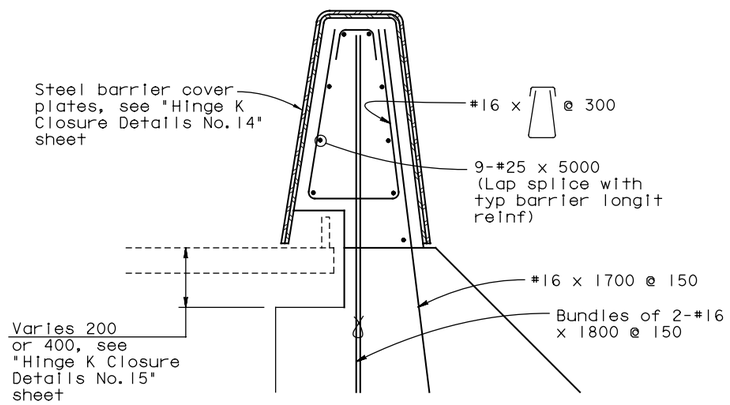

BARRIER DETAIL AT BLOCKOUT FOR EXPANSION JOINT ASSEMBLY

1:10

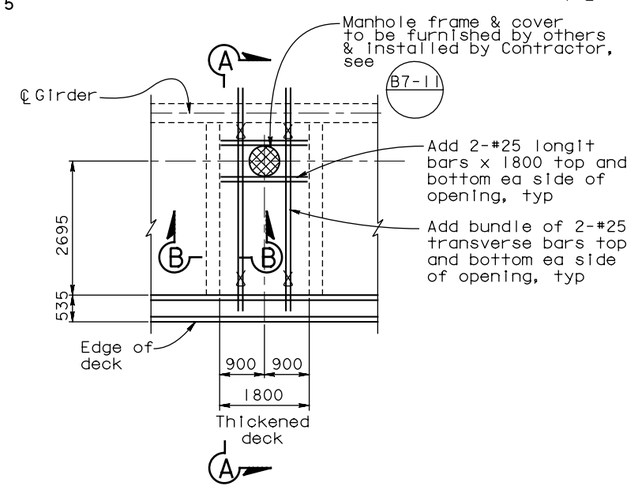

PLAN AT DECK ACCESS MANHOLES

(4 Req'd)

1:60

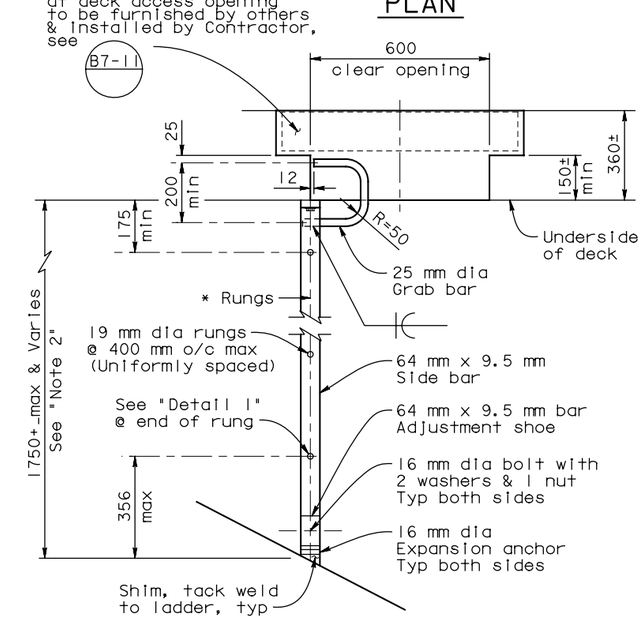

SECTION C-C

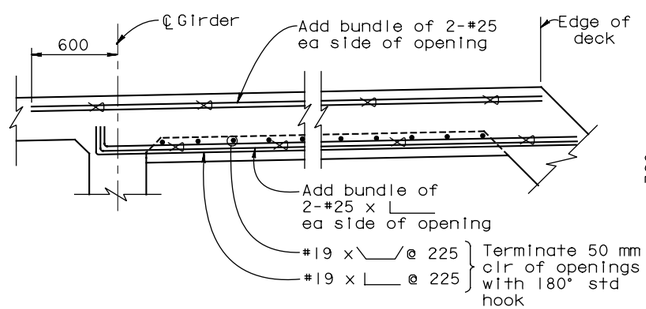

SECTION A-A

NO SCALE

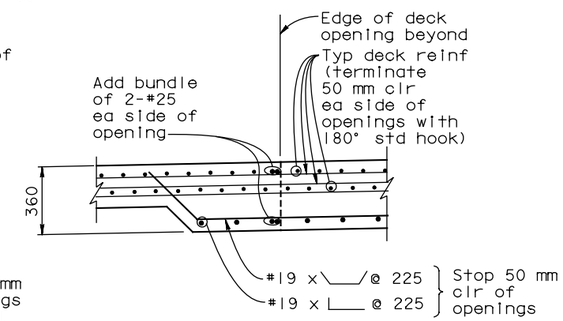

SECTION B-B

NO SCALE

TYPICAL LADDER DETAILS AT DECK ACCESS OPENINGS

1:10

SUPPLEMENTAL SHEET

CONTRACT CHANGE ORDER NO. _____
SHEET ____ OF ____

ALL DIMENSIONS ARE IN MILLIMETERS UNLESS OTHERWISE SHOWN

SAN FRANCISCO OAKLAND BAY BRIDGE
EAST SPAN SEISMIC SAFETY PROJECT

YBI TRANSITION STRUCTURES - HINGE K

HINGE K CLOSURE DETAILS NO.7

DESIGN OVERSIGHT			
SIGN OFF DATE			
Rev. Date: 5-18-98			

	BY	CHECKED
DESIGN	Lee	Wang
DETAILS	van Ryn/Zucchi/Mai	Jain
QUANTITIES	Liao	E. Nichol

PREPARED FOR THE STATE OF CALIFORNIA DEPARTMENT OF TRANSPORTATION

Jal Birdy
PROJECT ENGINEER

BRIDGE NO. 34-0006 L/R
KILOMETER POST 12.8

ORIGINAL SCALE IN MILLIMETERS FOR REDUCED PLANS 0 10 20 30 40 50 60 70 80 90 100

CU 04
EA 0120F1

DISREGARD PRINTS BEARING EARLIER REVISION DATES

REVISION DATES (PRELIMINARY STAGE ONLY)

SHEET K124A OF 209

FILE => P:\4141-06\CADD\TS\Checked Plans\YBITS #1-100% No. 2_03-03-08 (Final Renamed)\121911 Hinge K SAS T19 CCO\04-0120f1-34-006r1-n-hingedt07.dgn

Dec 19, 2011

USERNAME => FSamson DATE PLOTTED => 12/19/2011 TIME PLOTTED => 3:27:35 PM

DIST.	COUNTY	ROUTE	KILOMETER POST TOTAL PROJECT	SHEET NO.	TOTAL SHEETS
04	SF	80	12.7/13.2	K673AA	806

Caltrans Metric

REGISTERED ENGINEER - CIVIL

PLANS APPROVAL DATE

REGISTERED PROFESSIONAL ENGINEER A.L. ELY No. 18880 Exp. 6-30-13 CIVIL STATE OF CALIFORNIA

The State of California or its officers or agents shall not be responsible for the accuracy or completeness of electronic copies of this plan sheet.

T.Y. LIN / MOFFATT & NICHOL
TWO HARRISON STREET
SAN FRANCISCO, CA 94105

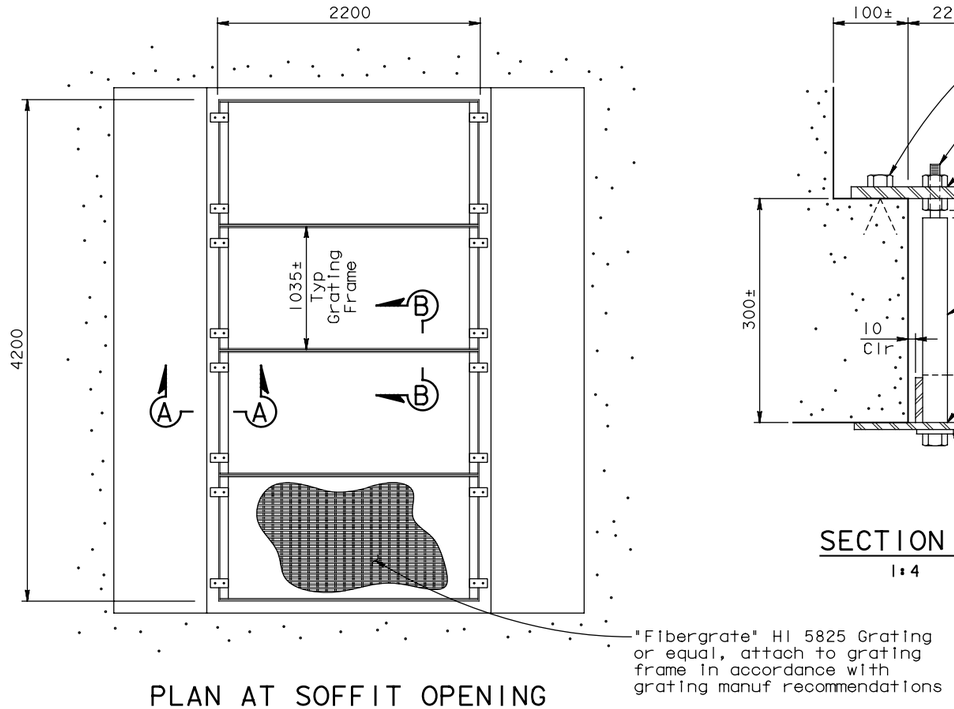

PLAN AT SOFFIT OPENING
1:25

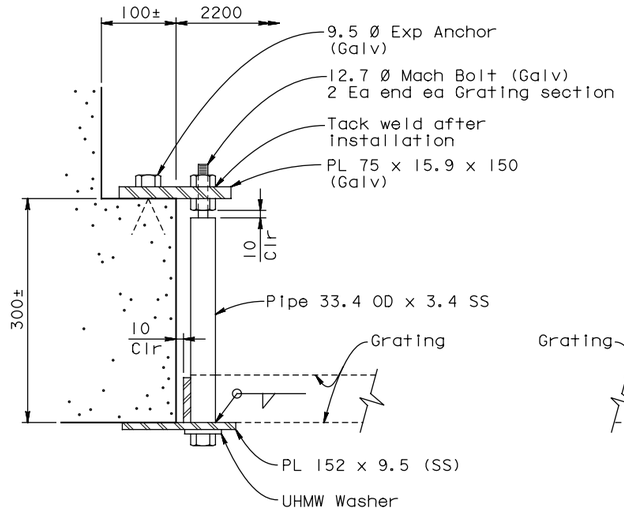

SECTION A-A
1:4

Grating Design (Service) Loads:

Live Load - 4788 Pa
Wind (Uplift) - 3830 Pa

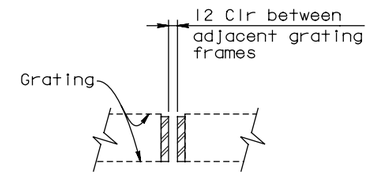

SECTION B-B
1:4

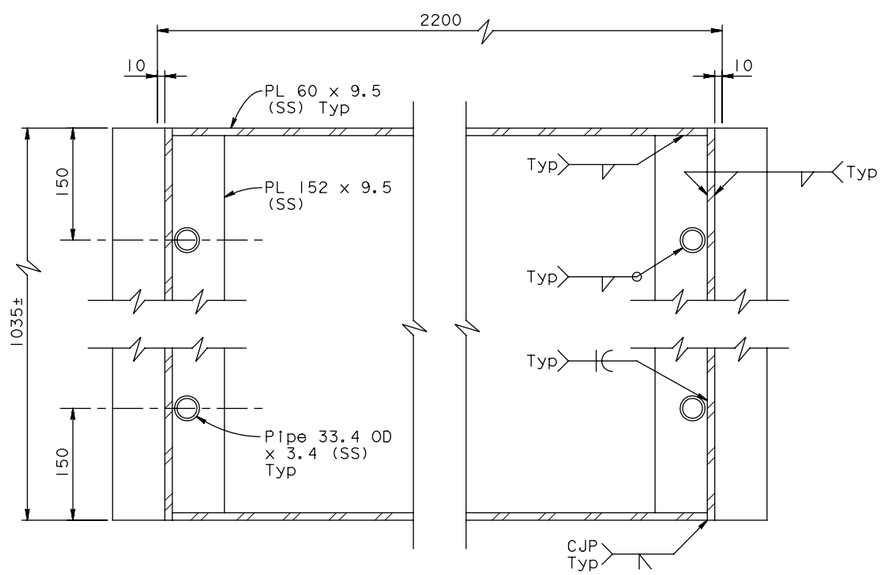

PLAN - GRATING FRAME
1:4

Note: Welding to stainless steel shall be in accordance with AWS D1.6-1999.

ALL DIMENSIONS ARE IN MILLIMETERS UNLESS OTHERWISE SHOWN

SUPPLEMENTAL SHEET

CONTRACT CHANGE ORDER NO. _____
SHEET ____ OF ____

SAN FRANCISCO OAKLAND BAY BRIDGE
EAST SPAN SEISMIC SAFETY PROJECT

YBI TRANSITION STRUCTURES - HINGE K

HINGE K CLOSURE DETAILS NO. 7A

DESIGN OVERSIGHT					
SIGN OFF DATE	DESIGN	BY Lee	CHECKED Birdy	PREPARED FOR THE STATE OF CALIFORNIA DEPARTMENT OF TRANSPORTATION	Jal Birdy PROJECT ENGINEER
	DETAILS	BY Samson	CHECKED Ely		
	QUANTITIES	BY Fellows	CHECKED Birdy		

BRIDGE NO. 34-0006 L/R
KILOMETER POST 12.8

Rev. Date: 5-18-98

ORIGINAL SCALE IN MILLIMETERS FOR REDUCED PLANS 0 10 20 30 40 50 60 70 80 90 100

CU 04
EA 0120F1

DISREGARD PRINTS BEARING EARLIER REVISION DATES

REVISION DATES (PRELIMINARY STAGE ONLY)

SHEET K124AA OF 209

FILE => P:\4141-06\CADD\TS\Checked Plans\YBITS #1-100% No. 2_03-03-08 (Final Renamed)\121911 Hinge K SAS T19 CCO\04-0120f1-34-006r1-n-hingedt07a.dgn

Dec 19, 2011

USERNAME => FSamson DATE PLOTTED => 12/19/2011 TIME PLOTTED => 3:27:47 PM

SUPPLEMENTAL SHEET

CONTRACT CHANGE ORDER NO. ____
SHEET ___ OF ___

DIST.	COUNTY	ROUTE	KILOMETER POST TOTAL PROJECT	SHEET NO.	TOTAL SHEETS
04	SF	80	12.7/13.2	K674A	806

REGISTERED ENGINEER - CIVIL

PLANS APPROVAL DATE

REGISTERED PROFESSIONAL ENGINEER A.L. ELY No. 18880 Exp. 6-30-13 CIVIL STATE OF CALIFORNIA

The State of California or its officers or agents shall not be responsible for the accuracy or completeness of electronic copies of this plan sheet.

T.Y. LIN / MOFFATT & NICHOL
TWO HARRISON STREET
SAN FRANCISCO, CA 94105

DIST.	COUNTY	ROUTE	KILOMETER POST TOTAL PROJECT	SHEET NO.	TOTAL SHEETS
04	SF	80	13.2/13.9	846	1204

REGISTERED ENGINEER - CIVIL

12-6-04
PLANS APPROVAL DATE

REGISTERED PROFESSIONAL ENGINEER Marwan N. Nader No. C 054426 Exp. 12/31/05 CIVIL STATE OF CALIFORNIA

The State of California or its officers or agents shall not be responsible for the accuracy or completeness of electronic copies of this plan sheet.

T.Y. LIN / MOFFATT & NICHOL
825 BATTERY STREET
SAN FRANCISCO, CA 94111

Caltrans now has a web site! To get to the web site, go to: http://www.dot.ca.gov

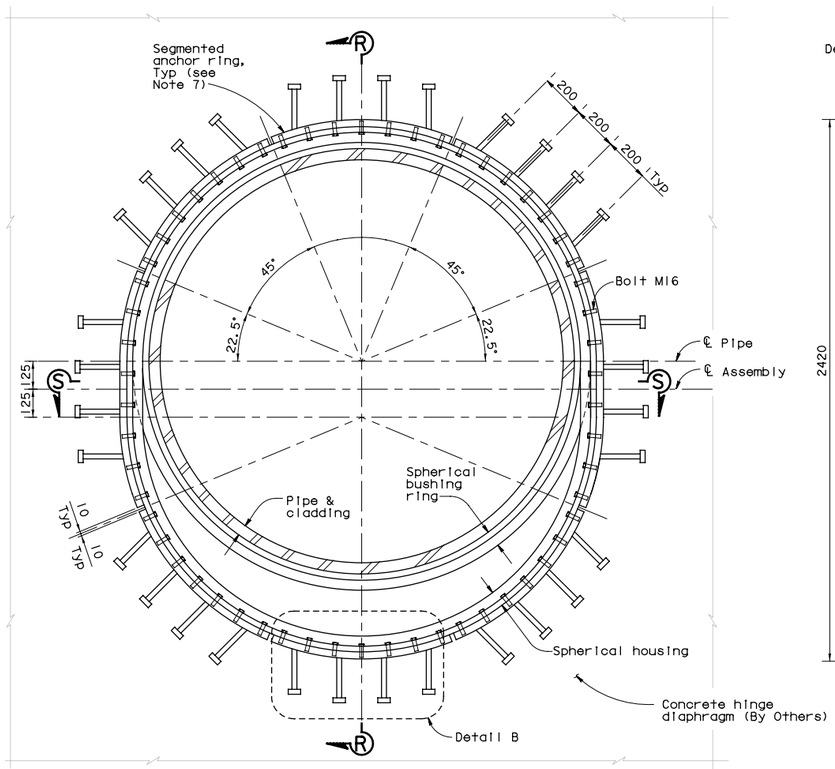

SECTION N-N
1:10

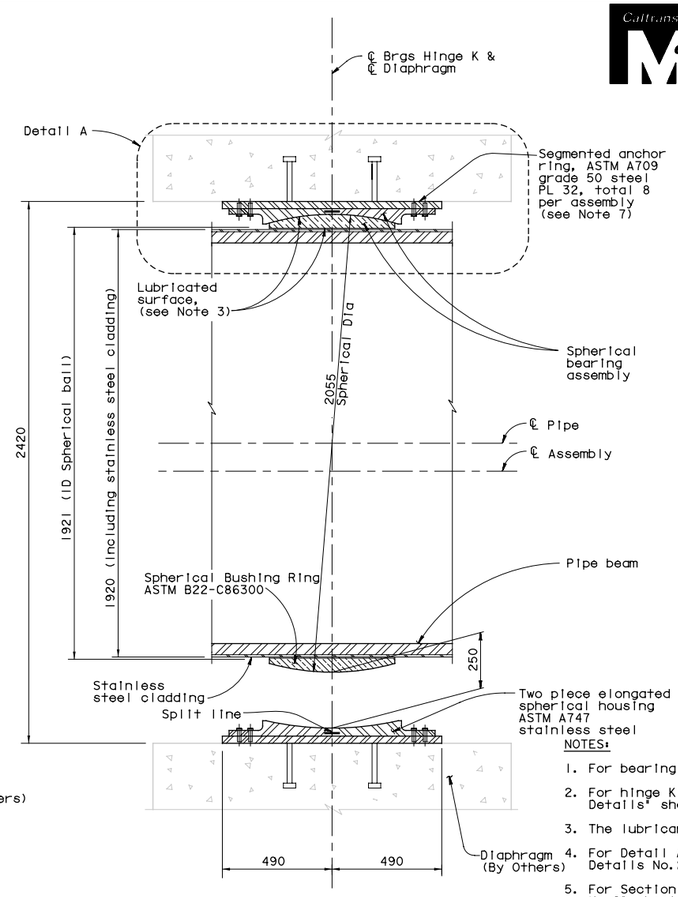

SECTION R-R
1:10

NOTES:

1. For bearing locations, see 'Hinge K Layout' sheets.
2. For hinge K additional details, see 'Hinge K Details' sheets.
3. The lubricant shall be self lubricated.
4. For Detail A and Detail B, see 'Hinge K Bearing Details No.2' sheet.
5. For Section S-S, see 'Hinge K Bearing Details No.2' sheet.
6. Hinge K Bearing assembly is shown in its erected final position for information only. The Contractor shall furnish Hinge K bearing assembly. Erection of Hinge K bearing by Others. Hinge K bearing Assembly Consists of Spherical bushing ring, lubricated surfaces, Spherical bearing assembly, two piece elongated spherical housing, segmented anchor ring and all connection and assembly bolts, pins and studs.
7. The Contractor may propose an alternate arrangement of the segmented anchor ring subject to the review and approval of the Engineer.

100% PS&E

ALL DIMENSIONS ARE IN MILLIMETERS UNLESS OTHERWISE SHOWN

R. Valizadeh/V. Toan/Y.L./W.L./F.C.
DESIGN OVERSIGHT
Ron Valizadeh / Vinh Toan / Y. Liu
SIGN OFF DATE 04/18/04
Rev. Date: 5-18-98

	BY	CHECKED
DESIGN	M. Nader	J. Krizek
DETAILS	C. Mibelli	N. Vo
QUANTITIES	C. Mibelli	N. Vo

PREPARED FOR THE STATE OF CALIFORNIA DEPARTMENT OF TRANSPORTATION

R. Manzanarez
PROJECT ENGINEER

BRIDGE NO. 34-0006L/R
KILOMETER POST 13.2/13.9

SAN FRANCISCO OAKLAND BAY BRIDGE
EAST SPAN SEISMIC SAFETY PROJECT
SELF-ANCHORED SUSPENSION BRIDGE
(SUPERSTRUCTURE & TOWER)

HINGE K BEARING DETAILS NO. 1

ORIGINAL SCALE IN MILLIMETERS FOR REDUCED PLANS 0 10 20 30 40 50 60 70 80 90 100

CU 04
EA 0120F1

DISREGARD PRINTS BEARING EARLIER REVISION DATES 04/08/02 01/07/02 12/13/02

REVISION DATES (PRELIMINARY STAGE ONLY)

SHEET 429 OF

DESIGN OVERSIGHT

SIGN OFF DATE

Rev. Date: 5-18-98

	BY	CHECKED
DESIGN	NA	NA
DETAILS	van Ryn/Zucchi/Mai	Jain
QUANTITIES	Liao	E. Nichol

PREPARED FOR THE STATE OF CALIFORNIA DEPARTMENT OF TRANSPORTATION

Jal Birdy
PROJECT ENGINEER

BRIDGE NO. 34-0006 L/R
KILOMETER POST 12.8

SAN FRANCISCO OAKLAND BAY BRIDGE
EAST SPAN SEISMIC SAFETY PROJECT

YBI TRANSITION STRUCTURES - HINGE K

HINGE K CLOSURE DETAILS NO. 8

ORIGINAL SCALE IN MILLIMETERS FOR REDUCED PLANS 0 10 20 30 40 50 60 70 80 90 100

CU 04
EA 0120F1

DISREGARD PRINTS BEARING EARLIER REVISION DATES

REVISION DATES (PRELIMINARY STAGE ONLY)

SHEET K125A OF 209

FILE => P:\4141-06\CADD\TS\Checked Plans\YBITS #1-100% No. 2_03-03-08 (Final Renamed)\121911 Hinge K SAS T19 CCO\04-0120f1-34-006r1-n-hingedt08.dgn

Dec 19, 2011

USERNAME => FSamson DATE PLOTTED => 12/19/2011 TIME PLOTTED => 3:28:01 PM

SUPPLEMENTAL SHEET

CONTRACT CHANGE ORDER NO. ____
SHEET ___ OF ___

DIST.	COUNTY	ROUTE	KILOMETER POST TOTAL PROJECT	SHEET NO.	TOTAL SHEETS
04	SF	80	12.7/13.2	K675A	806

REGISTERED ENGINEER - CIVIL

PLANS APPROVAL DATE

REGISTERED PROFESSIONAL ENGINEER A.L. ELY No. 18880 Exp. 6-30-13 CIVIL STATE OF CALIFORNIA

The State of California or its officers or agents shall not be responsible for the accuracy or completeness of electronic copies of this plan sheet.

T.Y. LIN / MOFFATT & NICHOL
TWO HARRISON STREET
SAN FRANCISCO, CA 94105

DIST.	COUNTY	ROUTE	KILOMETER POST TOTAL PROJECT	SHEET NO.	TOTAL SHEETS
04	SF	80	13.2/13.9	847C	1204

REGISTERED ENGINEER - CIVIL

12-6-04
PLANS APPROVAL DATE

REGISTERED PROFESSIONAL ENGINEER Marwan N. Nader No. C 054426 Exp. 12/31/05 CIVIL STATE OF CALIFORNIA

The State of California or its officers or agents shall not be responsible for the accuracy or completeness of electronic copies of this plan sheet.

T.Y. LIN / MOFFATT & NICHOL
825 BATTERY STREET
SAN FRANCISCO, CA 94111

Caltrans now has a web site! To get to the web site, go to: http://www.dot.ca.gov

5

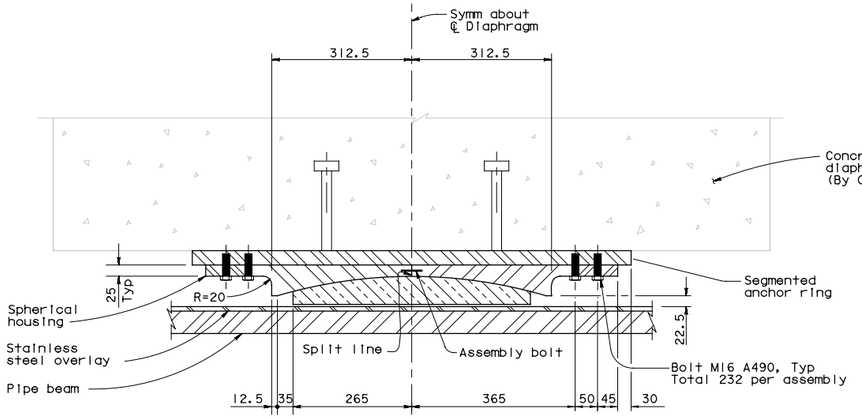

DETAIL A
1:5

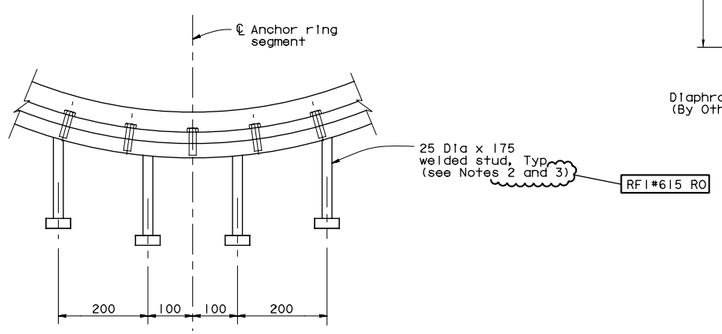

DETAIL B
1:5

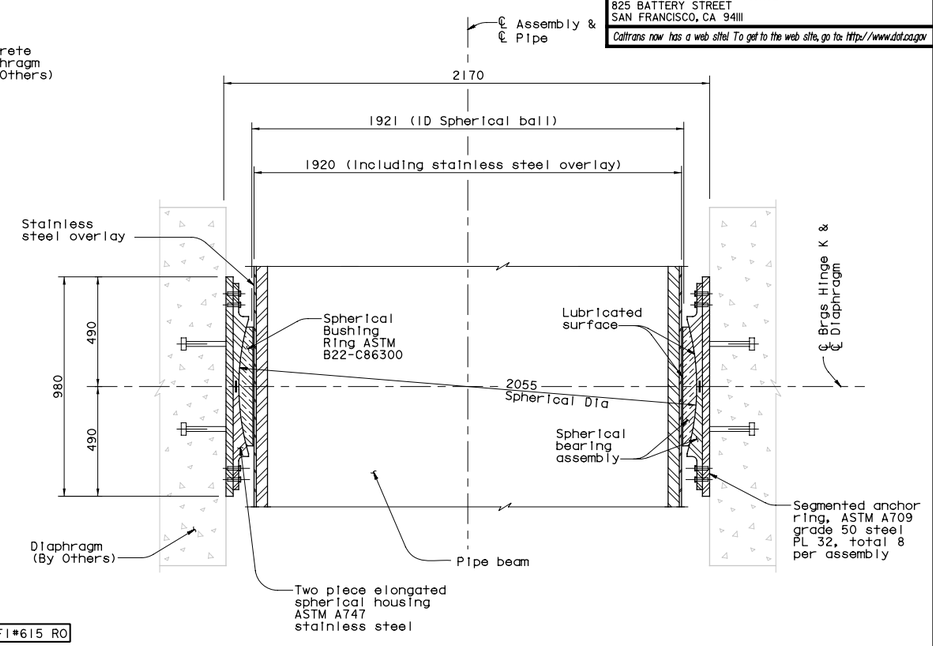

SECTION S-S
1:10
(see Note 1)

NOTES:

1. For other details, see Section R-R in 'Hinge K Bearing Details No.1' sheet.
2. At the Contractor's option, welded studs may be installed radially.
3. At the Contractor's option, longer studs up to 210 mm may be used.

RFI#615 R0

100% PS&E

5 REVISED PER ADDENDUM NO. 5 DATED DECEMBER 21, 2005

ALL DIMENSIONS ARE IN MILLIMETERS UNLESS OTHERWISE SHOWN

R. Valizadeh/V. Toan/Y. L./W. L./F. C.
DESIGN OVERSIGHT
SIGN OFF DATE 12/07/05
Rev. Date: 5-18-98

	BY	CHECKED
DESIGN	M. Nader	J. Krizek
DETAILS	C. Mibelli	N. Vo
QUANTITIES	C. Mibelli	N. Vo

PREPARED FOR THE STATE OF CALIFORNIA DEPARTMENT OF TRANSPORTATION

R. Manzanarez
PROJECT ENGINEER

CU 04
EA 0120F1

BRIDGE NO. 34-0006L/R
KILOMETER POST 13.2/13.9

SAN FRANCISCO OAKLAND BAY BRIDGE
EAST SPAN SEISMIC SAFETY PROJECT
SELF-ANCHORED SUSPENSION BRIDGE
(SUPERSTRUCTURE & TOWER)
HINGE K BEARING DETAILS NO. 2

ORIGINAL SCALE IN MILLIMETERS FOR REDUCED PLANS 0 10 20 30 40 50 60 70 80 90 100

DISREGARD PRINTS BEARING EARLIER REVISION DATES 05/26/05 07/07/05 12/06/05 12/07/05

SHEET 430C OF

NOTES:

1. The drawing provided hereon is reproduced from the contract plans of the adjacent Self-Anchored Suspension Bridge contract.

DESIGN OVERSIGHT
SIGN OFF DATE
Rev. Date: 5-18-98

	BY	CHECKED
DESIGN	NA	NA
DETAILS	van Ryn/Zucchi/Mai	Jain
QUANTITIES	Liao	E. Nichol

PREPARED FOR THE STATE OF CALIFORNIA DEPARTMENT OF TRANSPORTATION

Jal Birdy
PROJECT ENGINEER

CU 04
EA 0120F1

BRIDGE NO. 34-0006 L/R
KILOMETER POST 12.8

SAN FRANCISCO OAKLAND BAY BRIDGE
EAST SPAN SEISMIC SAFETY PROJECT
YBI TRANSITION STRUCTURES - HINGE K
HINGE K CLOSURE DETAILS NO. 9

ORIGINAL SCALE IN MILLIMETERS FOR REDUCED PLANS 0 10 20 30 40 50 60 70 80 90 100

DISREGARD PRINTS BEARING EARLIER REVISION DATES

SHEET K126A OF 209

SUPPLEMENTAL SHEET

CONTRACT CHANGE ORDER NO. ____
SHEET ___ OF ___

DIST.	COUNTY	ROUTE	KILOMETER POST TOTAL PROJECT	SHEET NO.	TOTAL SHEETS
04	SF	80	12.7/13.2	K676A	806

REGISTERED ENGINEER - CIVIL

PLANS APPROVAL DATE

REGISTERED PROFESSIONAL ENGINEER A.L. ELY No. 18880 Exp. 6-30-13 CIVIL STATE OF CALIFORNIA

The State of California or its officers or agents shall not be responsible for the accuracy or completeness of electronic copies of this plan sheet.

T.Y. LIN / MOFFATT & NICHOL
TWO HARRISON STREET
SAN FRANCISCO, CA 94105

DIST.	COUNTY	ROUTE	KILOMETER POST TOTAL PROJECT	SHEET NO.	TOTAL SHEETS
04	SF	80	13.2/13.9	848	1204

REGISTERED ENGINEER - CIVIL

12-6-04
PLANS APPROVAL DATE

REGISTERED PROFESSIONAL ENGINEER Marwan N. Nader No. C 054426 Exp. 12/31/05 CIVIL STATE OF CALIFORNIA

The State of California or its officers or agents shall not be responsible for the accuracy or completeness of electronic copies of this plan sheet.

T.Y. LIN / MOFFATT & NICHOL
825 BATTERY STREET
SAN FRANCISCO, CA 94111

Caltrans now has a web site! To get to the web site, go to: http://www.dot.ca.gov

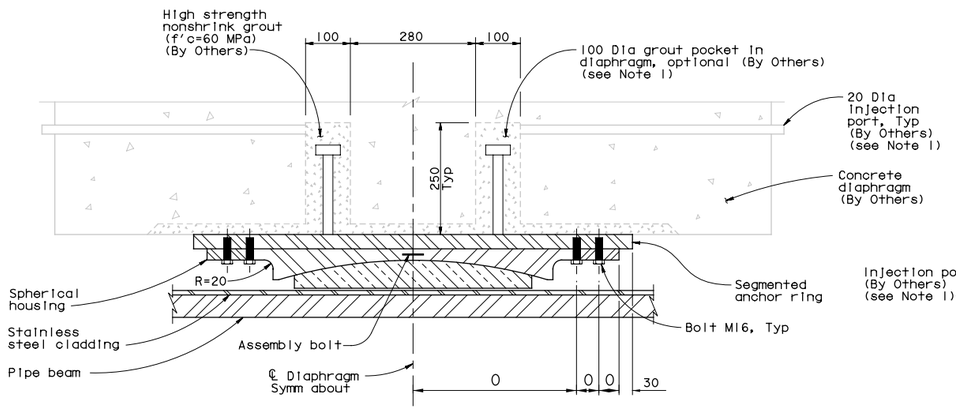

DETAIL A
1:5

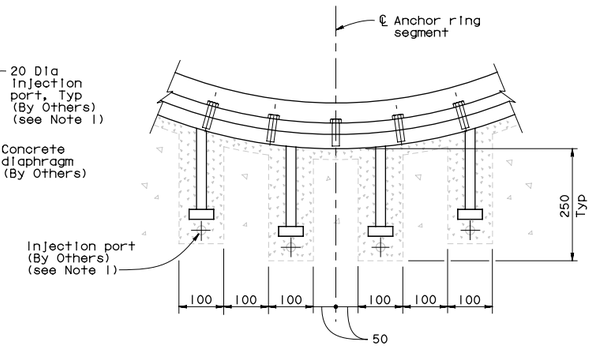

DETAIL B
1:5

GROUTED POCKET ALTERNATIVE FOR PLACEMENT OF BEARING

HINGE K BEARING DESIGN VALUES

Hinge	Support Type	Design Load (KN per pipe beam)		Design Rotation (radians)		Uplift-Inside bearing gap (mm)	Longitudinal Movement (mm)	
		Service	Ultimate	Service	Ultimate		Service	Ultimate
KW, KE	Sliding	10100	56250	0.001	0.0130	250	134	1000 (closing) 1300 (opening)

* Design value for shear given corresponds to maximum shear capacity of fuse pipe beam. It can occur in any direction.

NOTES:

1. Grouted pockets with injection ports are an acceptable alternative to insure that the bearings are aligned and installed within the specified tolerances (by Others).

100% PS&E

ALL DIMENSIONS ARE IN MILLIMETERS UNLESS OTHERWISE SHOWN

R. Valizadeh/V. Toan/Y.L./W.L./F.C.
DESIGN OVERSIGHT
Ryan Zucchi/Vong Toan/Y. Liu
SIGN OFF DATE 12/19/02
Rev. Date: 5-18-98

	BY	CHECKED
DESIGN	M. Nader	J. Krizek
DETAILS	C. Mibelli	N. Vo
QUANTITIES	C. Mibelli	N. Vo

PREPARED FOR THE STATE OF CALIFORNIA DEPARTMENT OF TRANSPORTATION

R. Manzanarez
PROJECT ENGINEER

BRIDGE NO. 34-0006L/R
KILOMETER POST 13.2/13.9

SAN FRANCISCO OAKLAND BAY BRIDGE
EAST SPAN SEISMIC SAFETY PROJECT
SELF-ANCHORED SUSPENSION BRIDGE
(SUPERSTRUCTURE & TOWER)
HINGE K BEARING DETAILS NO. 3

ORIGINAL SCALE IN MILLIMETERS FOR REDUCED PLANS 0 10 20 30 40 50 60 70 80 90 100

CU 04
EA 0120F1

DISREGARD PRINTS BEARING EARLIER REVISION DATES 04/08/02 07/26/02 12/19/02

SHEET 431 OF

DESIGN OVERSIGHT

SIGN OFF DATE

Rev. Date: 5-18-98

	BY	CHECKED
DESIGN	NA	NA
DETAILS	van Ryn/Zucchi/Mai	Jain
QUANTITIES	Liao	E. Nichol

PREPARED FOR THE STATE OF CALIFORNIA DEPARTMENT OF TRANSPORTATION

Jal Birdy
PROJECT ENGINEER

BRIDGE NO. 34-0006 L/R
KILOMETER POST 12.8

SAN FRANCISCO OAKLAND BAY BRIDGE
EAST SPAN SEISMIC SAFETY PROJECT
YBI TRANSITION STRUCTURES - HINGE K
HINGE K CLOSURE DETAILS NO. 10

ORIGINAL SCALE IN MILLIMETERS FOR REDUCED PLANS 0 10 20 30 40 50 60 70 80 90 100

CU 04
EA 0120F1

DISREGARD PRINTS BEARING EARLIER REVISION DATES

REVISION DATES (PRELIMINARY STAGE ONLY)

SHEET K127A OF 209

NOTES:

1. The drawing provided hereon is reproduced from the contract plans of the adjacent Self-Anchored Suspension Bridge contract.

Dec 19, 2011

USERNAME => FSamson DATE PLOTTED => 12/19/2011 TIME PLOTTED => 3:28:21 PM

FILE => P:\4141-06\CADD\TS\Checked Plans\YBITS #1-100% No. 2_03-03-08 (Final Renamed)\121911 Hinge K SAS T19 CCO\04-0120f1-34-006r1-n-hingedt10.dgn

SUPPLEMENTAL SHEET

CONTRACT CHANGE ORDER NO. ____
SHEET ___ OF ___

DIST.	COUNTY	ROUTE	KILOMETER POST TOTAL PROJECT	SHEET NO.	TOTAL SHEETS
04	SF	80	12.7/13.2	K677A	806

REGISTERED ENGINEER - CIVIL

PLANS APPROVAL DATE

REGISTERED PROFESSIONAL ENGINEER A.L. ELY No. 18880 Exp. 6-30-13 CIVIL STATE OF CALIFORNIA

The State of California or its officers or agents shall not be responsible for the accuracy or completeness of electronic copies of this plan sheet.

T.Y. LIN / MOFFATT & NICHOL
TWO HARRISON STREET
SAN FRANCISCO, CA 94105

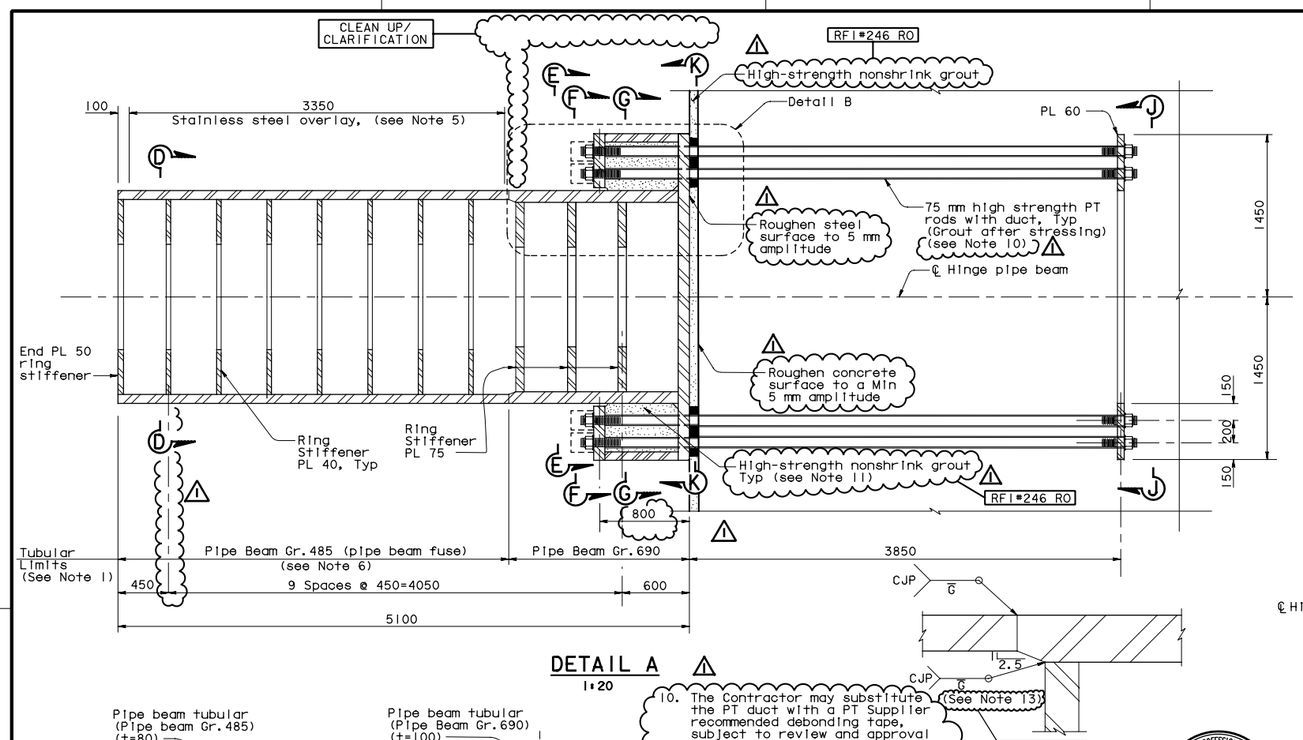

DETAIL A
1:20

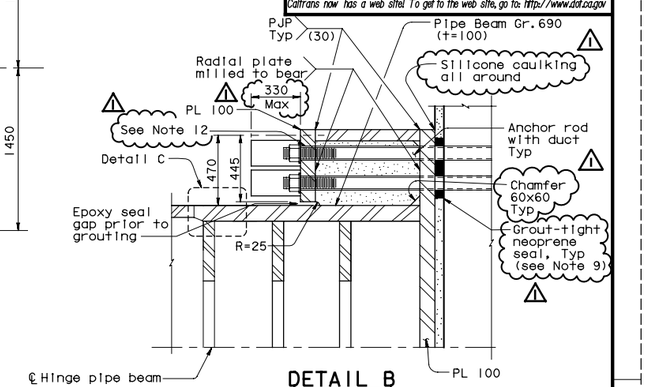

DETAIL B
1:15

NOTES:

1. Pipe Beam tubulars shall be forgings. Hinge beam ring stiffener plate, stiffener plates and anchorage plates shall be pipe beam Gr. 485, UNO.
2. Hinge beam shall be SPCM.
3. For Section F-F through K-K, see 'Hinge K Details No. 2' sheet.
4. Steel hinge beam PT anchor rods are 75 mm high strength PT rods (fu=1030 Mpa) with standard galvanized steel ducts, unless specified otherwise. For additional prestressing details, see 'Prestressing Notes' sheet, and for general stressing sequence, see 'Pier W2 Construction Sequence' sheet.
5. The areas noted as stainless steel overlay shall be 316L weld overlay. The area shall be machine finished to within 1 mm of the 960 theoretical radius with a surface finish of 0.8µm. The minimum final thickness of the stainless steel overlay shall be 5 mm.
6. Total of 4 spare beam fuses (including stiffeners) for hinges KW and KE shall be fabricated with a minimum overall length of 3513 mm. Spare pipe beams to replace the fuse sections in case of damage due to earthquake in the future (By Others). RFI#300 RO
7. Jacking force in the steel hinge beam PT anchor rods (HBI-HB76) shall be 3000 kN typical. RFI#400 RO
8. Welds between interior ring stiffnener plates and tubulars may be undermatched by one strength level.
9. Grout-tight neoprene seal shown is schematic. The seal shall prevent any grout from seeping through the PT rod holes in the base plate. Area around the hole perimeter shall be ground smooth to produce a tight seal.

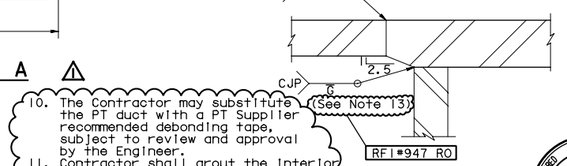

DETAIL C
1:5

10. The Contractor may substitute the PT duct with a PT Supplier recommended debonding tape, subject to review and approval by the Engineer.
11. Contractor shall grout the interior cells of the pipe beam anchorage if PT duct substitution is approved by the Engineer.
12. At the Contractor's option, a 96 max diameter oversized hole may be used provided a 25 min thick plate washer is also used. Plate washer shall have silicone caulking around the perimeter. Post-tension cap shall be attached to the seal plate washer. RFI#246 RO
13. At the Contractor's option, it is acceptable to add a reinforcing fillet to this weld and grind it smooth. RFI#947 RO

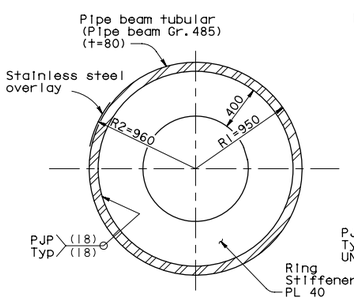

SECTION D-D
1:20

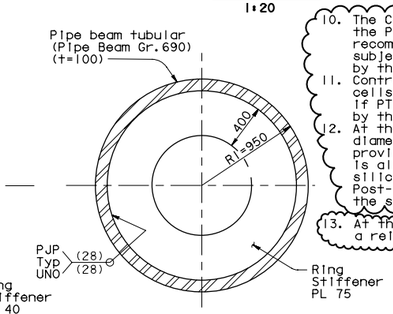

SECTION E-E
1:20

MARK	DATE	DESCRIPTIONS	BY	CH'D	CCO#
5	01/31/07	HINGE K PIPE BEAM BLOCKOUTS	MN	NV	15

REVISIONS

CONTRACT CHANGE ORDER NO. ____
SHEET ___ OF ___

FOR REVISIONS ONLY

5 REVISED PER ADDENDUM NO. 5 DATED DECEMBER 21, 2005

ALL DIMENSIONS ARE IN MILLIMETERS UNLESS OTHERWISE SHOWN

DIST.	COUNTY	ROUTE	KILOMETER POST TOTAL PROJECT	SHEET NO.	TOTAL SHEETS
04	SF	80	13.2/13.9	844RIC	1204

REGISTERED ENGINEER - CIVIL

12-6-04
PLANS APPROVAL DATE

REGISTERED PROFESSIONAL ENGINEER John Sun No. C 54648 Exp. 12/31/05 CIVIL STATE OF CALIFORNIA

The State of California or its officers or agents shall not be responsible for the accuracy or completeness of electronic copies of this plan sheet.

T.Y. LIN / MOFFATT & NICHOL
825 BATTERY STREET
SAN FRANCISCO, CA 94111

Caltrans now has a web site! To get to the web site, go to: http://www.dot.ca.gov

NOTES:

1. The drawing provided hereon is reproduced from the contract plans of the adjacent Self-Anchored Suspension Bridge contract.
2. This drawing provides details of the Hinge K pipe beam and is for reference only, pipe beams to be furnished and erected by others.

100% PS&E

R. Vallzadeh/V. Toan/Y.L./W.L./F.C.
DESIGN OVERSIGHT
SIGN OFF DATE 01/31/07
Rev. Date: 5-18-98

	BY	CHECKED
DESIGN	J. Sun	C. Redfield
DETAILS	J. Duxbury	M. Chen
QUANTITIES	J. Duxbury	S. Shi

PREPARED FOR THE STATE OF CALIFORNIA DEPARTMENT OF TRANSPORTATION

R. Manzanarez
PROJECT ENGINEER

BRIDGE NO. 34-0006L/R
KILOMETER POST 13.2/13.9

CU 04
EA 0120F1

ORIGINAL SCALE IN MILLIMETERS FOR REDUCED PLANS 0 10 20 30 40 50 60 70 80 90 100

DISREGARD PRINTS BEARING EARLIER REVISION DATES

REVISION DATES (PRELIMINARY STAGE ONLY) 04/26/99 05/27/99 04/26/02 07/26/02 12/26/02 12/07/05

SHEET 427RIC OF

SAN FRANCISCO OAKLAND BAY BRIDGE
EAST SPAN SEISMIC SAFETY PROJECT
SELF-ANCHORED SUSPENSION BRIDGE
(SUPERSTRUCTURE & TOWER)
HINGE K DETAILS NO. 1

DESIGN OVERSIGHT
SIGN OFF DATE
Rev. Date: 5-18-98

	BY	CHECKED
DESIGN	NA	NA
DETAILS	van Ryn/Zucchi/Mai	Jain
QUANTITIES	Liao	E. Nichol

PREPARED FOR THE STATE OF CALIFORNIA DEPARTMENT OF TRANSPORTATION

Jai Birdy
PROJECT ENGINEER

BRIDGE NO. 34-0006 L/R
KILOMETER POST 12.8

CU 04
EA 0120F1

ORIGINAL SCALE IN MILLIMETERS FOR REDUCED PLANS 0 10 20 30 40 50 60 70 80 90 100

DISREGARD PRINTS BEARING EARLIER REVISION DATES

REVISION DATES (PRELIMINARY STAGE ONLY)

SHEET K128A OF 209

SAN FRANCISCO OAKLAND BAY BRIDGE
EAST SPAN SEISMIC SAFETY PROJECT
YBI TRANSITION STRUCTURES - HINGE K
HINGE K CLOSURE DETAILS NO. 11

FILE => P:\4141-06\CADD\TS\Checked Plans\YBITS #1-100% No. 2_03-03-08 (Final Renamed)\12191 Hinge K SAS T19 CCO\04-0120f1-34-006r1-n-hingedt11.dgn

Dec 19, 2011 TIME PLOTTED => 3:28:32 PM DATE PLOTTED => 12/19/2011 USERNAME => FSamson

SUPPLEMENTAL SHEET

CONTRACT CHANGE ORDER NO. ____
SHEET ___ OF ___

DIST.	COUNTY	ROUTE	KILOMETER POST TOTAL PROJECT	SHEET NO.	TOTAL SHEETS
04	SF	80	12.7/13.2	K678A	806

REGISTERED ENGINEER - CIVIL

PLANS APPROVAL DATE

REGISTERED PROFESSIONAL ENGINEER A.L. ELY No. 18880 Exp. 6-30-13 CIVIL STATE OF CALIFORNIA

The State of California or its officers or agents shall not be responsible for the accuracy or completeness of electronic copies of this plan sheet.

T.Y. LIN / MOFFATT & NICHOL
TWO HARRISON STREET
SAN FRANCISCO, CA 94105

DIST.	COUNTY	ROUTE	KILOMETER POST TOTAL PROJECT	SHEET NO.	TOTAL SHEETS
04	SF	80	13.2/13.9	845RIC	1204

REGISTERED ENGINEER - CIVIL

12-6-04
PLANS APPROVAL DATE

REGISTERED PROFESSIONAL ENGINEER John Sun No. C 54648 Exp. 12/31/05 CIVIL STATE OF CALIFORNIA

The State of California or its officers or agents shall not be responsible for the accuracy or completeness of electronic copies of this plan sheet.

T.Y. LIN / MOFFATT & NICHOL
825 BATTERY STREET
SAN FRANCISCO, CA 94111

Caltrans now has a web site! To get to the web site, go to: http://www.dot.ca.gov

REGISTERED PROFESSIONAL ENGINEER Manoucher Nader No. C 054426 Exp. 12/31/07 CIVIL STATE OF CALIFORNIA

FOR REVISIONS ONLY

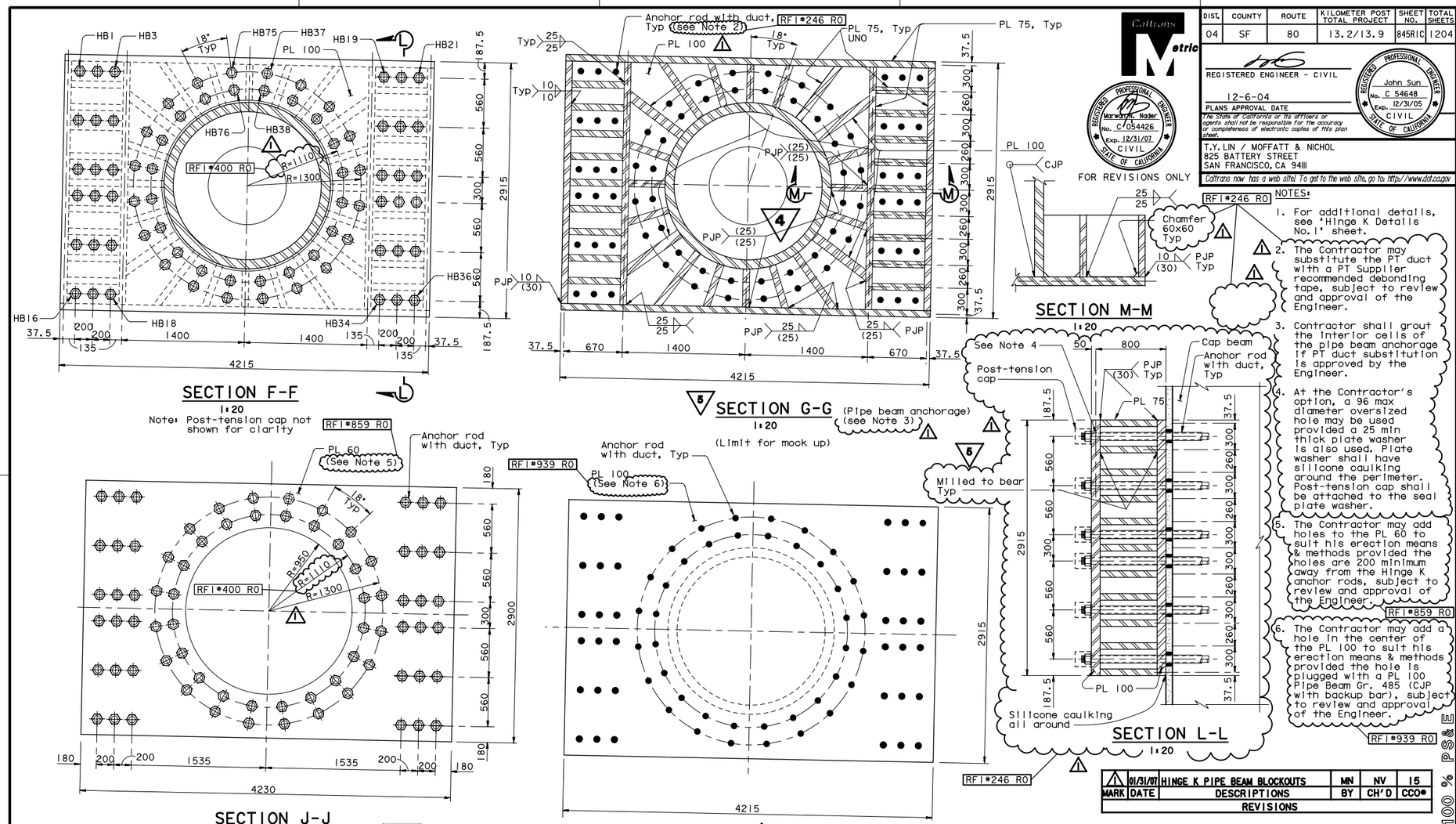

NOTES:

1. For additional details, see 'Hinge K Details No.1' sheet.
2. The Contractor may substitute the PT duct with a PT Supplier recommended debonding tape, subject to review and approval of the Engineer.
3. Contractor shall grout the interior cells of the pipe beam anchorage if PT duct substitution is approved by the Engineer.
4. At the Contractor's option, a 96 max diameter oversized hole may be used provided a 25 min thick plate washer is also used. Plate washer shall have silicone caulking around the perimeter. Post-tension cap shall be attached to the seal plate washer.
5. The Contractor may add holes to the PL 60 to suit his erection means & methods provided the holes are 200 minimum away from the Hinge K anchor rods, subject to review and approval of the Engineer. RF1#859 R0
6. The Contractor may add a hole in the center of the PL 100 to suit his erection means & methods provided the hole is plugged with a PL 100 Pipe Beam Gr. 485 (CJP with backup bar), subject to review and approval of the Engineer. RF1#939 R0

MARK	DATE	DESCRIPTIONS	BY	CH'D	CCO#
1	01/31/07	HINGE K PIPE BEAM BLOCKOUTS	MN	NV	15

REVISIONS

4 REVISED PER ADDENDUM NO. 4 DATED DECEMBER 9, 2005

5 REVISED PER ADDENDUM NO. 5 DATED DECEMBER 21, 2005

ALL DIMENSIONS ARE IN MILLIMETERS UNLESS OTHERWISE SHOWN

100 % PLOT

R. Valizadeh/V. Toan/Y. L./W. L./F. C.
DESIGN OVERSIGHT
SIGN OFF DATE 01/31/07
Rev. Date: 5-18-98

	BY	CHECKED
DESIGN	J. Sun	C. Redfield
DETAILS	J. Duxbury	M. Chen
QUANTITIES	J. Duxbury	S. Shi

PREPARED FOR THE STATE OF CALIFORNIA DEPARTMENT OF TRANSPORTATION

R. Manzanarez
PROJECT ENGINEER

BRIDGE NO. 34-0006L/R
KILOMETER POST 13.2/13.9

SAN FRANCISCO OAKLAND BAY BRIDGE
EAST SPAN SEISMIC SAFETY PROJECT
SELF-ANCHORED SUSPENSION BRIDGE
(SUPERSTRUCTURE & TOWER)

HINGE K DETAILS NO. 2

ORIGINAL SCALE IN MILLIMETERS FOR REDUCED PLANS 0 10 20 30 40 50 60 70 80 90 100

CU 04
EA 0120F1

DISREGARD PRINTS BEARING EARLIER REVISION DATES 05/31/01 04/09/02 07/09/02 12/09/02 11/13/05

SHEET 428RIC OF

DESIGN OVERSIGHT
SIGN OFF DATE
Rev. Date: 5-18-98

	BY	CHECKED
DESIGN	NA	NA
DETAILS	van Ryn/Zucchi/Mai	Jain
QUANTITIES	Liao	E. Nichol

PREPARED FOR THE STATE OF CALIFORNIA DEPARTMENT OF TRANSPORTATION

Jal Birdy
PROJECT ENGINEER

BRIDGE NO. 34-0006 L/R
KILOMETER POST 12.8

SAN FRANCISCO OAKLAND BAY BRIDGE
EAST SPAN SEISMIC SAFETY PROJECT

YBI TRANSITION STRUCTURES - HINGE K

HINGE K CLOSURE DETAILS NO. 12

ORIGINAL SCALE IN MILLIMETERS FOR REDUCED PLANS 0 10 20 30 40 50 60 70 80 90 100

CU 04
EA 0120F1

DISREGARD PRINTS BEARING EARLIER REVISION DATES

REVISION DATES (PRELIMINARY STAGE ONLY)

SHEET K129A OF 209

FILE => P:\4141-06\CADD\TS\Checked Plans\YBITS #1-100% No. 2_03-03-08 (Final Renamed)\121911 Hinge K SAS T19 CCO\04-0120f1-34-006r1-n-hingedt12.dgn

Dec 19, 2011

USERNAME => FSamson DATE PLOTTED => 12/19/2011 TIME PLOTTED => 3:28:43 PM