DIST.	COUNTY	ROUTE	KILOMETER POST TOTAL PROJECT	SHEET NO.	TOTAL SHEETS
04	SF	80	12.7/13.2	K679A	806

REGISTERED ENGINEER - CIVIL

PLANS APPROVAL DATE

REGISTERED PROFESSIONAL ENGINEER A.L. ELY No. 18880 Exp. 6-30-13 CIVIL STATE OF CALIFORNIA

The State of California or its officers or agents shall not be responsible for the accuracy or completeness of electronic copies of this plan sheet.

T.Y. LIN / MOFFATT & NICHOL
TWO HARRISON STREET
SAN FRANCISCO, CA 94105

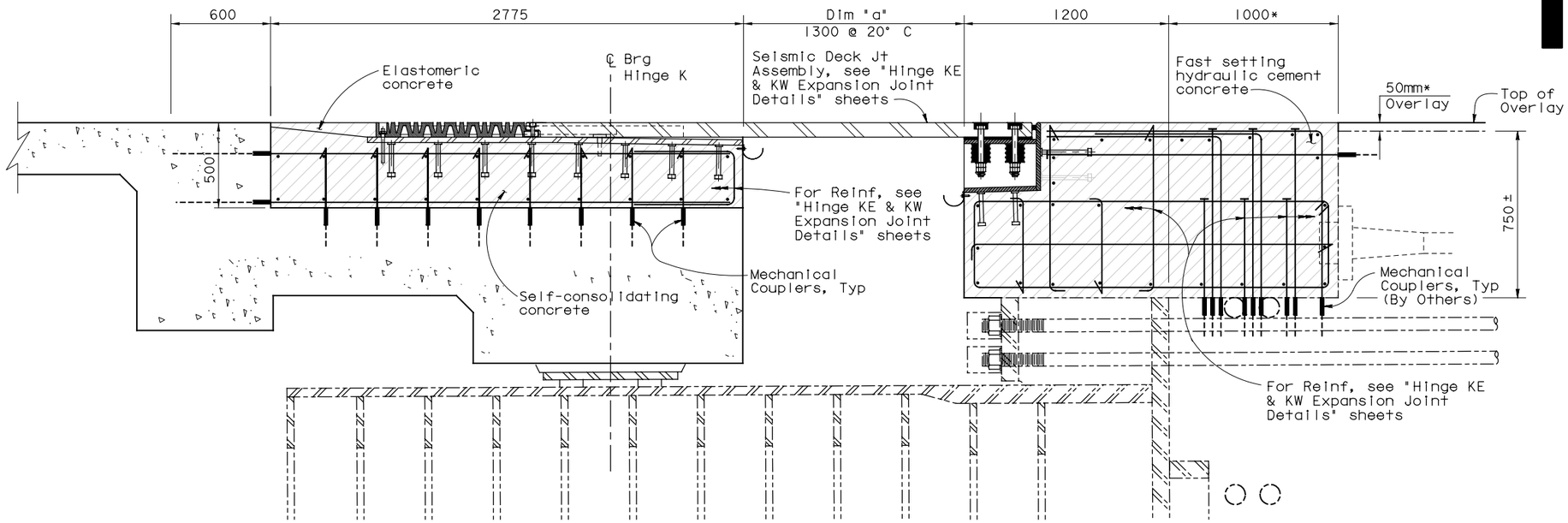

TYPICAL SECTION AT EXPANSION JOINT

1:15

Expansion Joint Information Movement Rating (MR): 280 mm	
Air Temperature (T)	Dimension "a" (mm)
5° C	1350
10° C	1333
15° C	1317
20° C	1300
25° C	1284
30° C	1267
35° C	1251

Indicates concrete placed when deck joint installed

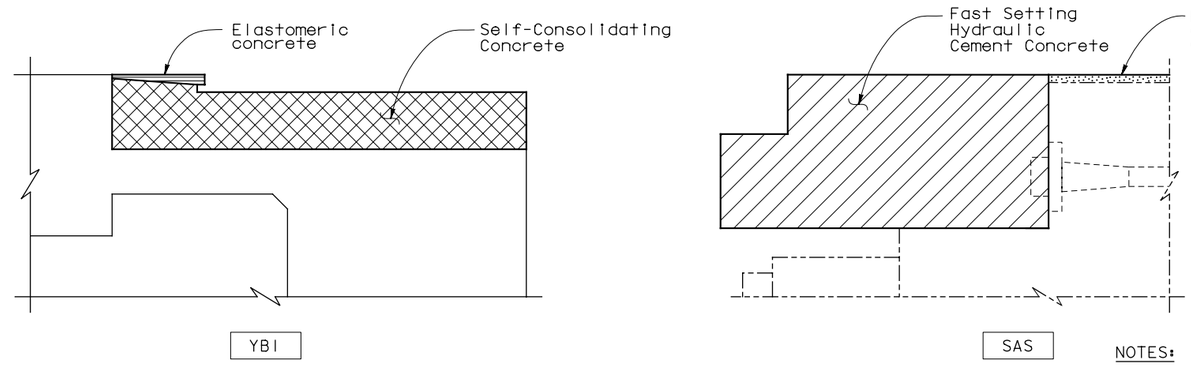

Fast Setting Hydraulic Cement Concrete (FSHCC) (f'_{ci} = 14 MPa @ 3 hours, f'_c = 35 MPa @ 56 days)

Self-Consolidating Concrete (SCC) Bridge (f'_c = 35 MPa @ 56 days)

Overlay

Elastomeric Concrete (see Note 1)

CONCRETE STRENGTH AND TYPE LIMITS

NOTES:

1. At the Contractor's option, Watson Bowman's WaboCrete II Elastomeric Concrete may be used, subject to review and approval of the Engineer.

SUPPLEMENTAL SHEET

CONTRACT CHANGE ORDER NO. _____
SHEET ____ OF ____

ALL DIMENSIONS ARE IN MILLIMETERS UNLESS OTHERWISE SHOWN

DESIGN OVERSIGHT ADE AKINSANYA
SIGN OFF DATE

	BY	CHECKED
DESIGN	Lee	Wang
DETAILS	van Ryn/Zucchi/Mai	Jain
QUANTITIES	Liao	E. Nichol

PREPARED FOR THE STATE OF CALIFORNIA DEPARTMENT OF TRANSPORTATION

Jai Birdy
PROJECT ENGINEER

BRIDGE NO. 34-0006L/R
KILOMETER POST 12.8

SAN FRANCISCO OAKLAND BAY BRIDGE
EAST SPAN SEISMIC SAFETY PROJECT

YBI TRANSITION STRUCTURES - HINGE K

HINGE K CLOSURE DETAILS NO. 13

Rev. Date: 5-18-98

ORIGINAL SCALE IN MILLIMETERS FOR REDUCED PLANS 0 10 20 30 40 50 60 70 80 90 100

CU 04
EA 0120F1

DISREGARD PRINTS BEARING EARLIER REVISION DATES

REVISION DATES (PRELIMINARY STAGE ONLY)

SHEET K130A OF 209

FILE => P:\4141-06\CADD\TS\Checked Plans\YBITS #1-100% No. 2_03-03-08 (Final Renamed)\010612 Hinge K SAS T19 CCO\04-0120f1-34-006r1

Jan 6, 2012

TIME PLOTTED => 5:21:29 PM
DATE PLOTTED => 1/5/2012
USERNAME => fsamson

DIST.	COUNTY	ROUTE	KILOMETER POST TOTAL PROJECT	SHEET NO.	TOTAL SHEETS
04	SF	80	12.7/13.2	K680A	806

Caltrans Metric

REGISTERED ENGINEER - CIVIL

PLANS APPROVAL DATE

REGISTERED PROFESSIONAL ENGINEER A.L. ELY No. 18880 Exp. 6-30-13 CIVIL STATE OF CALIFORNIA

The State of California or its officers or agents shall not be responsible for the accuracy or completeness of electronic copies of this plan sheet.

T.Y. LIN / MOFFATT & NICHOL
TWO HARRISON STREET
SAN FRANCISCO, CA 94105

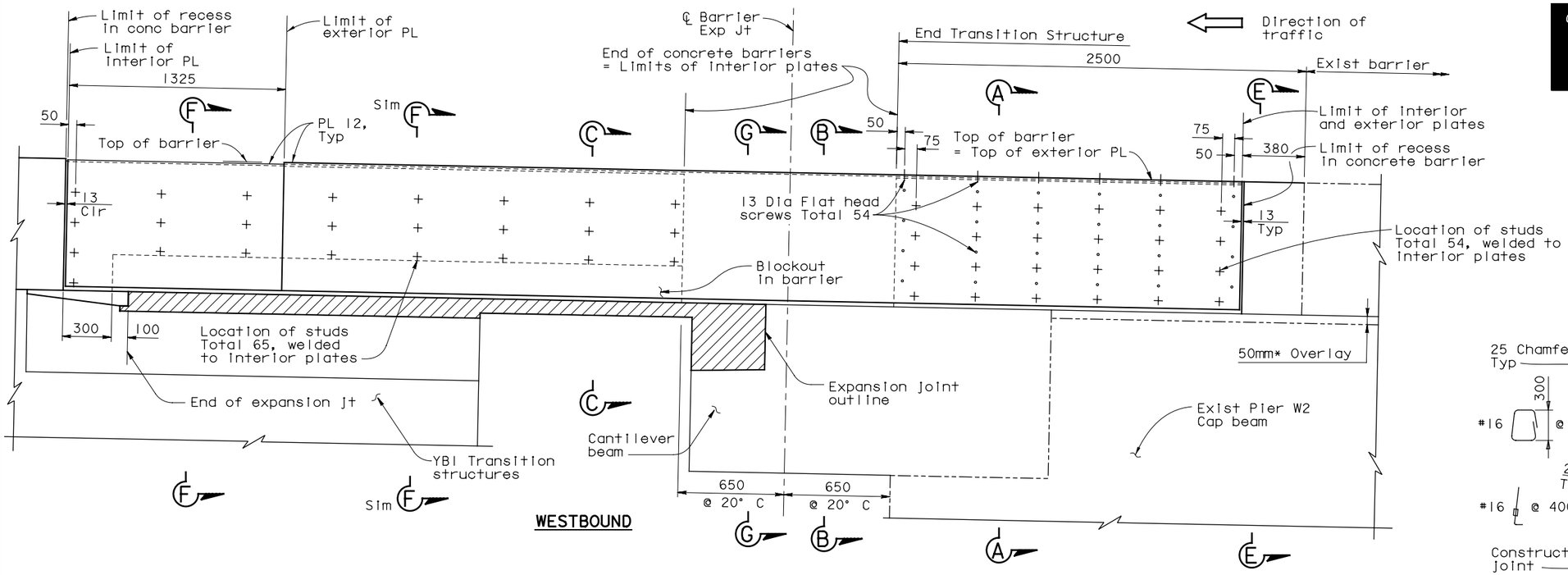

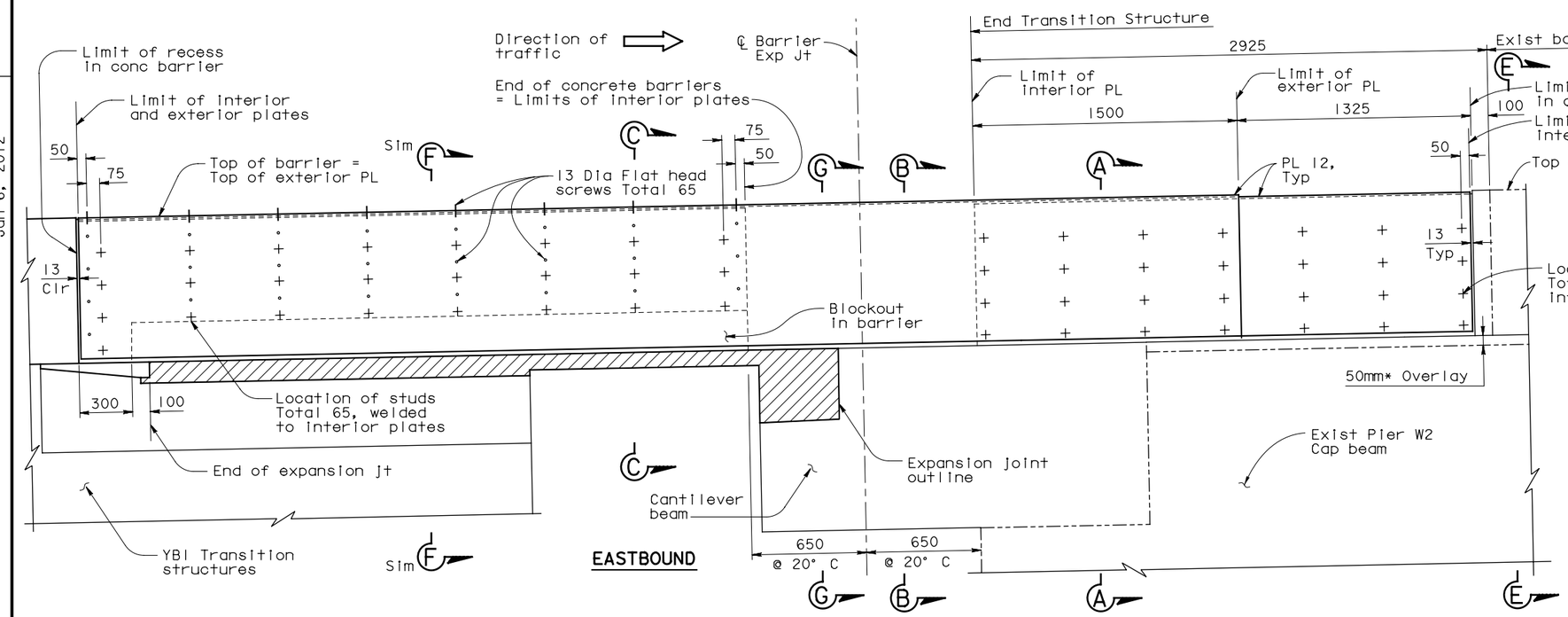

BARRIER AT HINGE K - ELEVATION

1:15

ALL DIMENSIONS ARE IN MILLIMETERS UNLESS OTHERWISE SHOWN

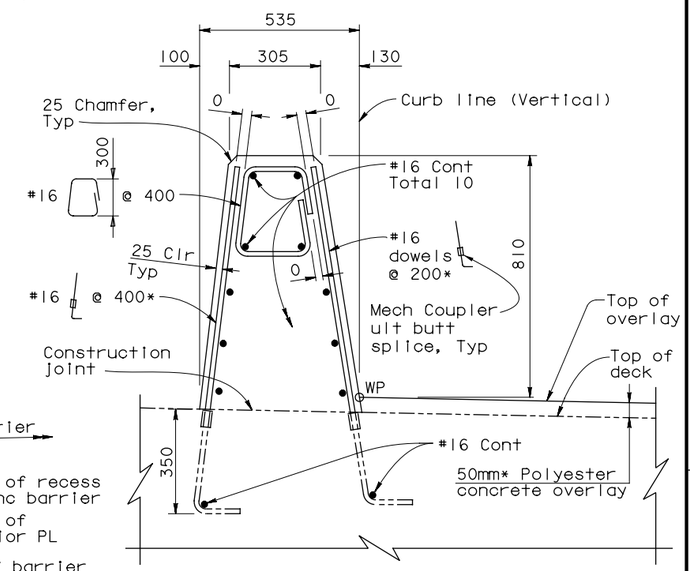

SECTION E-E

CONCRETE BARRIER TYPE 732 (MODIFIED)

For Pier W2 Cap beam only
1:10

SUPPLEMENTAL SHEET

CONTRACT CHANGE ORDER NO. _____
SHEET ____ OF ____

NOTES:

1. For Sections A-A, B-B, C-C, F-F and G-G, see "Hinge K Closure Details No.15" sheet.
2. All reinforcement in concrete barrier shall be epoxy coated.
3. Steel barrier cover plates to be furnished by others and installed by Contractor.

SAN FRANCISCO OAKLAND BAY BRIDGE
EAST SPAN SEISMIC SAFETY PROJECT

YBI TRANSITION STRUCTURES - HINGE K

HINGE K CLOSURE DETAILS NO.14

DESIGN OVERSIGHT ADE AKINSANYA			
SIGN OFF DATE			
Rev. Date: 5-18-98			

	BY	CHECKED
DESIGN	Lee	Wang
DETAILS	van Ryn/Zucchi/Mai	Jain
QUANTITIES	Liao	E. Nichol

PREPARED FOR THE STATE OF CALIFORNIA DEPARTMENT OF TRANSPORTATION

Jal Birdy
PROJECT ENGINEER

BRIDGE NO. 34-0006L/R
KILOMETER POST 12.8

CU 04
EA 0120F1

ORIGINAL SCALE IN MILLIMETERS FOR REDUCED PLANS 0 10 20 30 40 50 60 70 80 90 100

DISREGARD PRINTS BEARING EARLIER REVISION DATES

REVISION DATES (PRELIMINARY STAGE ONLY)

SHEET K131A OF 209

FILE => P:\4141-06\CADD\TS\Checked Plans\YBITS #1-100% No. 2_03-03-08 (Final Renamed)\010612 Hinge K SAS T19 CCO\04-0120f1-34-006r1

Jan 6, 2012

TIME PLOTTED => 5:21:38 PM
DATE PLOTTED => 1/5/2012
USERNAME => fsamson

DIST.	COUNTY	ROUTE	KILOMETER POST TOTAL PROJECT	SHEET NO.	TOTAL SHEETS
04	SF	80	12.7/13.2	K681A	806

Caltrans Metric

REGISTERED ENGINEER - CIVIL

PLANS APPROVAL DATE

REGISTERED PROFESSIONAL ENGINEER A.L. ELY No. 18880 Exp. 6-30-13 CIVIL STATE OF CALIFORNIA

The State of California or its officers or agents shall not be responsible for the accuracy or completeness of electronic copies of this plan sheet.

T.Y. LIN / MOFFATT & NICHOL
TWO HARRISON STREET
SAN FRANCISCO, CA 94105

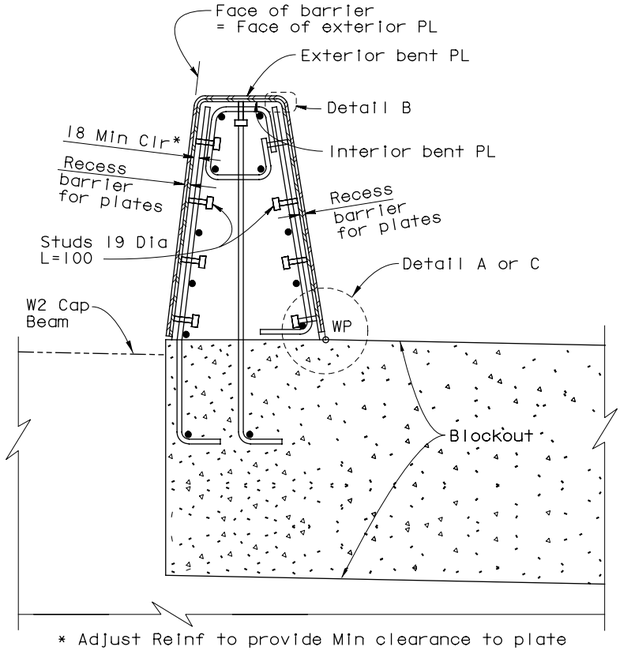

* Adjust Reinf to provide Min clearance to plate

SECTION A-A
1:10

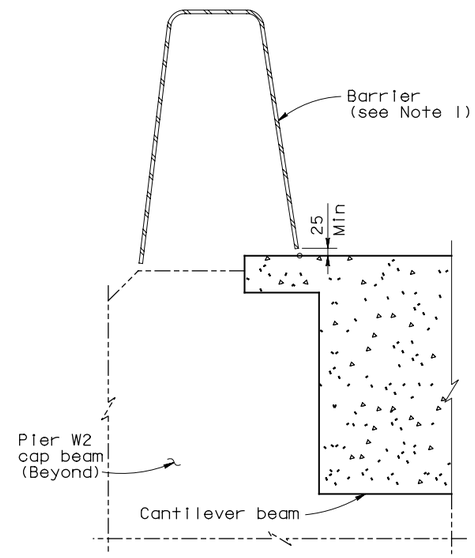

SECTION B-B
1:10

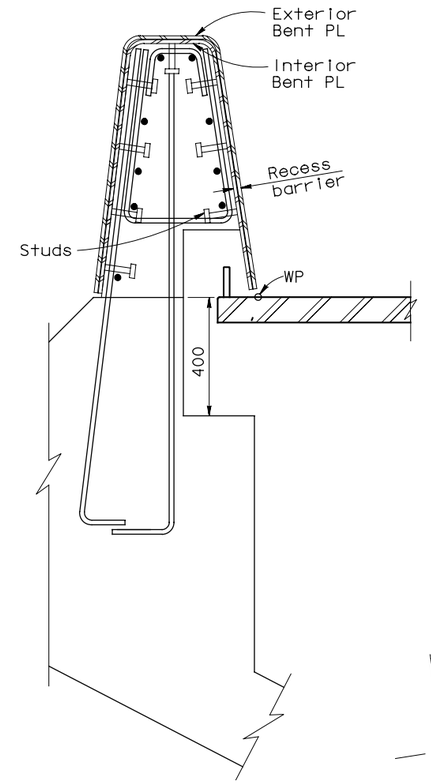

SECTION C-C
1:10

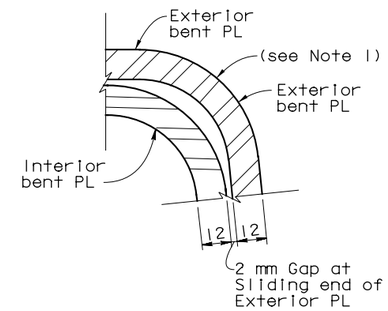

DETAIL B
NTS

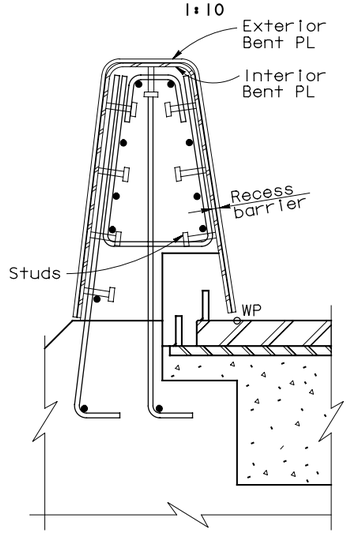

SECTION F-F
1:10

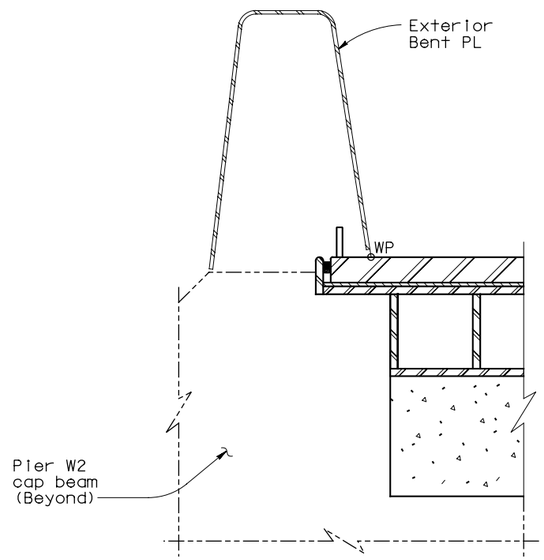

SECTION G-G
1:10

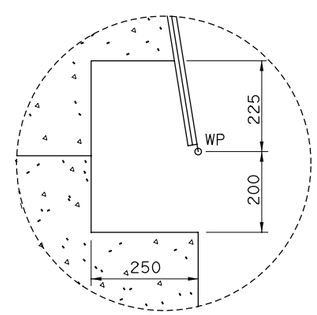

TYPICAL BARRIER BLOCKOUT
NTS

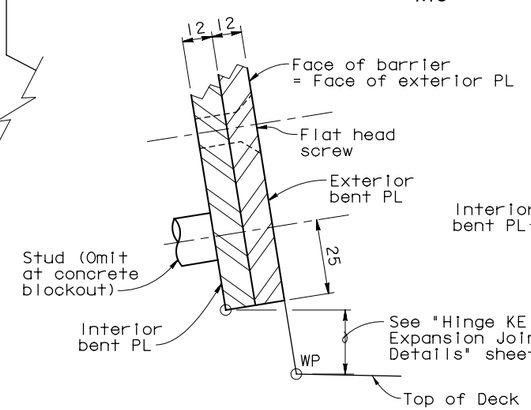

DETAIL TYPICAL AT FIXED END OF EXTERIOR PL
DETAIL A
NTS

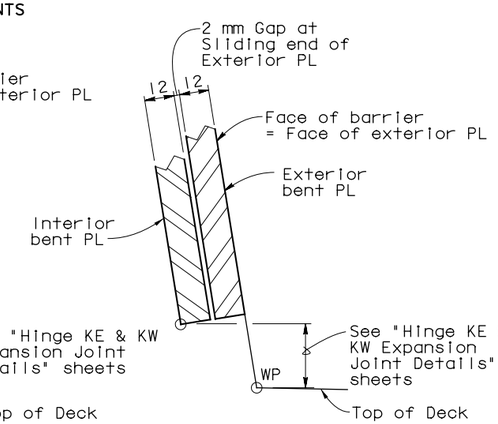

DETAIL TYPICAL AT SLIDING END OF EXTERIOR PL
DETAIL C
NTS

NOTES:

1. Bend steel plates to conform to shape of concrete barrier.
2. Galvanize all metal hardware after fabrication.
3. Steel barrier cover plates to be furnished by others and installed by Contractor.

SUPPLEMENTAL SHEET

CONTRACT CHANGE ORDER NO. _____
SHEET ____ OF ____

ALL DIMENSIONS ARE IN MILLIMETERS UNLESS OTHERWISE SHOWN

SAN FRANCISCO OAKLAND BAY BRIDGE
EAST SPAN SEISMIC SAFETY PROJECT

YBI TRANSITION STRUCTURES - HINGE K

HINGE K CLOSURE DETAILS NO. 15

DESIGN OVERSIGHT
ADE AKINSANYA
SIGN OFF DATE

Rev. Date: 5-18-98

	BY	CHECKED
DESIGN	Lee	Wang
DETAILS	van Ryn/Zucchi/Mal	Jain
QUANTITIES	Liao	E. Nichol

PREPARED FOR THE STATE OF CALIFORNIA DEPARTMENT OF TRANSPORTATION

J. Birdy
PROJECT ENGINEER

BRIDGE NO. 34-0006L/R
KILOMETER POST 12.8

CU 04
EA 0120F1

ORIGINAL SCALE IN MILLIMETERS FOR REDUCED PLANS 0 10 20 30 40 50 60 70 80 90 100

DISREGARD PRINTS BEARING EARLIER REVISION DATES

REVISION DATES (PRELIMINARY STAGE ONLY)

SHEET K132A OF 209

FILE => P:\4141-06\CADD\TS\Checked Plans\YBITS #1-100% No. 2_03-03-08 (Final Renamed)\010612 Hinge K SAS T19 CCO\04-0120f1-34-006rl

Jan 6, 2012

TIME PLOTTED => 5:21:47 PM
DATE PLOTTED => 1/5/2012
USERNAME => fsamson

DIST.	COUNTY	ROUTE	KILOMETER POST TOTAL PROJECT	SHEET NO.	TOTAL SHEETS
04	SF	80	12.7/13.2	K697A	806

REGISTERED ENGINEER - CIVIL

PLANS APPROVAL DATE

REGISTERED PROFESSIONAL ENGINEER Marwan N. Nader No. C 054426 Exp. 12/31/13 CIVIL STATE OF CALIFORNIA

The State of California or its officers or agents shall not be responsible for the accuracy or completeness of electronic copies of this plan sheet.

T.Y. LIN / MOFFATT & NICHOL
TWO HARRISON STREET
SAN FRANCISCO, CA 94105

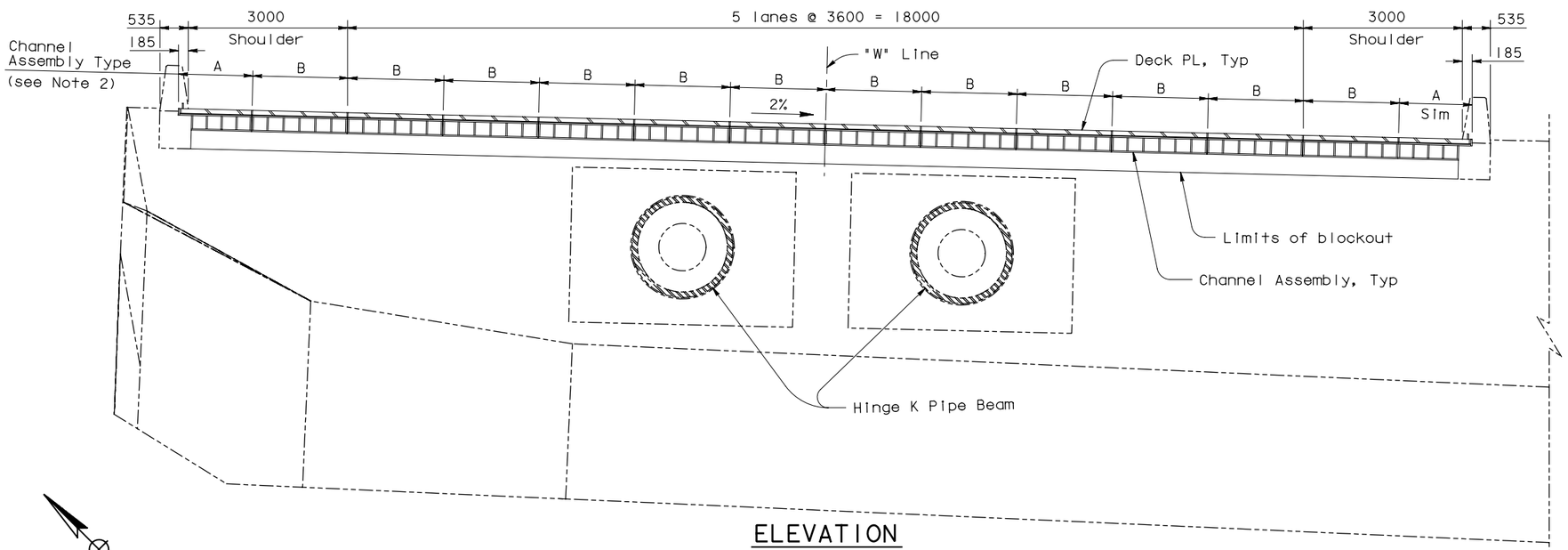

ELEVATION

1:50

(Westbound Shown, Eastbound Similar)
(Elevation View Looking East)

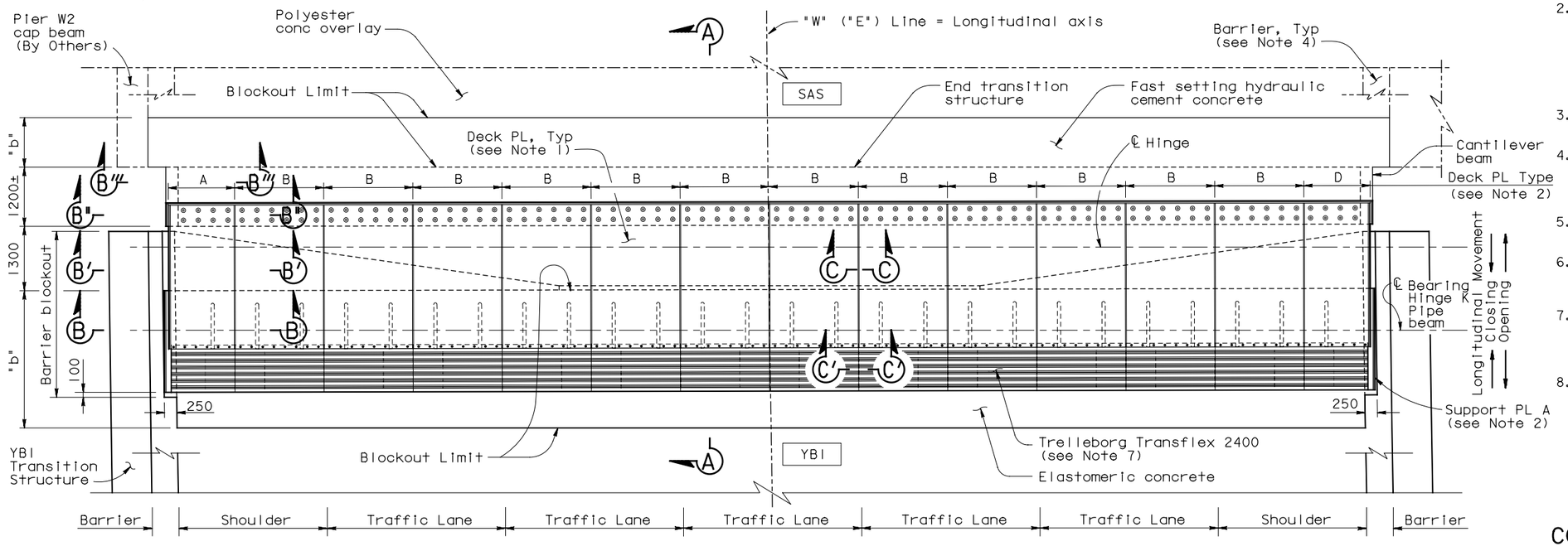

PLAN-EXPANSION JOINT

1:50

(Westbound Shown, Eastbound Similar)

Note: Hinge KE & KW Expansion Joints to be furnished by others and installed by the Contractor.

NOTES:

1. For Deck Plates A, B and D, see "Hinge KE & KW Expansion Joint Details No.3" sheet.
2. Deck Plate A and D matches with Support Plate A and the Channel Assembly A (Module A). Deck Plate B matches with Support Plate B and the Channel Assembly B (Module B). For details, see "Hinge KE & KW Expansion Joint Details No.3" and "Hinge KE & KW Expansion Joint Details No.5" sheets.
3. One module "B" is placed per half traffic lane.
4. Portions of barriers are not shown for clarity. For barrier details at expansion joint, see "Hinge K Closure Details No.14" sheet.
5. For Section A-A, see "Hinge KE & KW Expansion Joint Details No.2" sheet.
6. For Sections B-B, B′-B′, B′′-B′′, B′′′-B′′′, C-C and C′-C′, see "Hinge KE & KW Expansion Joint Details No.3" sheet.
7. The expansion joint shall be 1800 wide Transflex 2400 module with movement rating of 600. The joint between the Transflex modules shall be water tight.
8. For General Notes, see "General Notes" sheets.

SUPPLEMENTAL SHEET

CONTRACT CHANGE ORDER NO. _____
SHEET ____ OF ____

ALL DIMENSIONS ARE IN MILLIMETERS UNLESS OTHERWISE SHOWN

SAN FRANCISCO OAKLAND BAY BRIDGE
EAST SPAN SEISMIC SAFETY PROJECT

YBI TRANSITION STRUCTURES - HINGE K

HINGE KE & KW EXPANSION JOINT DETAILS NO.1

DESIGN OVERSIGHT ADE AKINSANYA	DESIGN	BY C. Redfield	CHECKED M. Nader
SIGN OFF DATE	DETAILS	BY H. Patel	CHECKED J. Duxbury
Rev. Date: 5-18-98	QUANTITIES	BY H. Patel	CHECKED J. Duxbury

PREPARED FOR THE STATE OF CALIFORNIA DEPARTMENT OF TRANSPORTATION

Jal Birdy
PROJECT ENGINEER

BRIDGE NO. 34-0006 L/R
KILOMETER POST 12.8

CU 04
EA 0120F1

ORIGINAL SCALE IN MILLIMETERS FOR REDUCED PLANS 0 10 20 30 40 50 60 70 80 90 100

DISREGARD PRINTS BEARING EARLIER REVISION DATES

REVISION DATES (PRELIMINARY STAGE ONLY)

SHEET K148A OF 209

Jan 6, 2012

USERNAME => fsamson DATE PLOTTED => 1/12/2012 TIME PLOTTED => 4:17:29 PM

FILE => P:\4141-06\CADD\TS\Checked Plans\YBITS #1-100% No. 2_03-03-08 (Final Renamed)\011212 Hinge K SAS T19 CCO\TYLin sheets\04-0

DIST.	COUNTY	ROUTE	KILOMETER POST TOTAL PROJECT	SHEET NO.	TOTAL SHEETS
04	SF	80	12.7/13.2	K698A	806

REGISTERED ENGINEER - CIVIL

PLANS APPROVAL DATE

REGISTERED PROFESSIONAL ENGINEER Marwan N. Nader No. C 054426 Exp. 12/31/13 CIVIL STATE OF CALIFORNIA

The State of California or its officers or agents shall not be responsible for the accuracy or completeness of electronic copies of this plan sheet.

T.Y. LIN / MOFFATT & NICHOL
TWO HARRISON STREET
SAN FRANCISCO, CA 94105

Caltrans Metric

Note: Hinge KE & KW Expansion Joints to be furnished by others and installed by the Contractor.

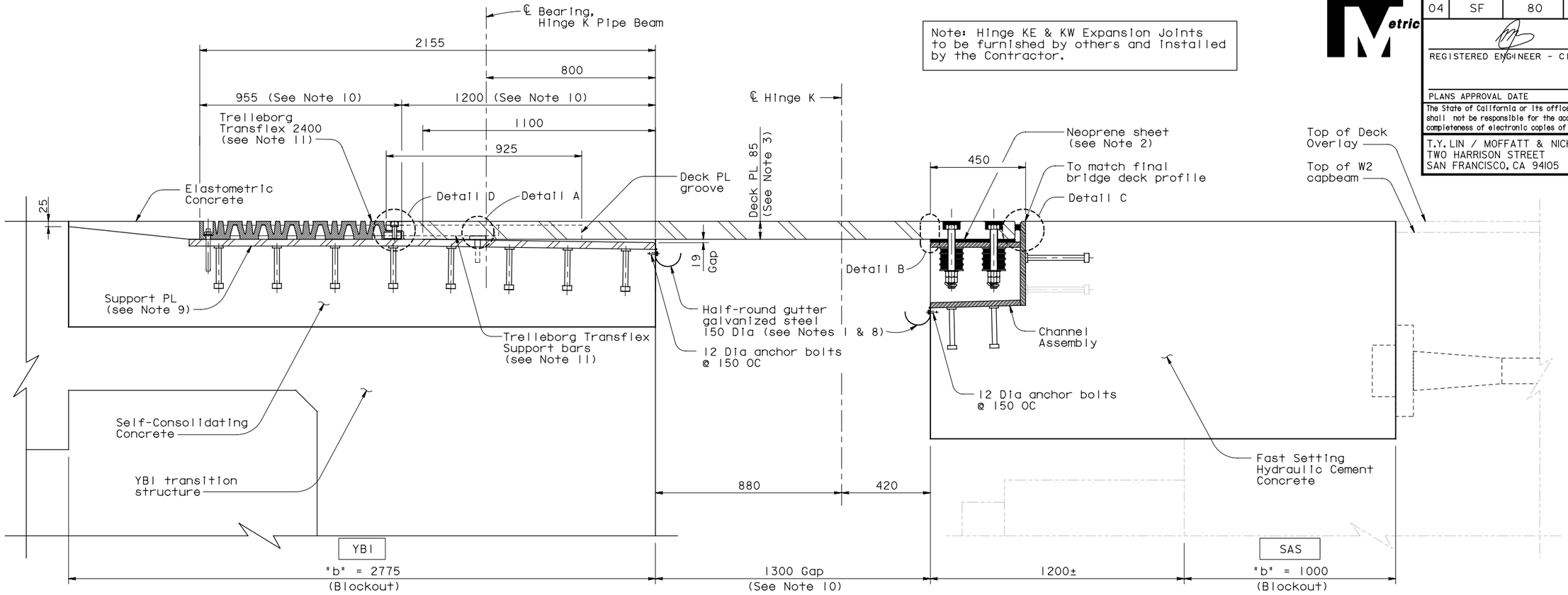

SECTION A-A
1:10

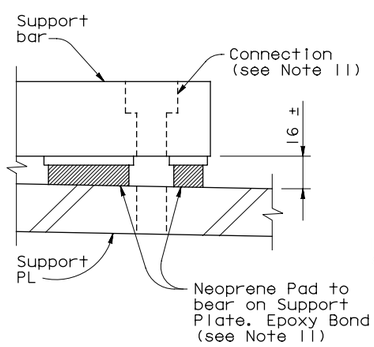

DETAIL A
1:2

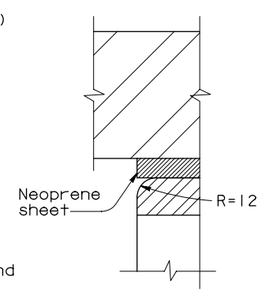

DETAIL B
1:2

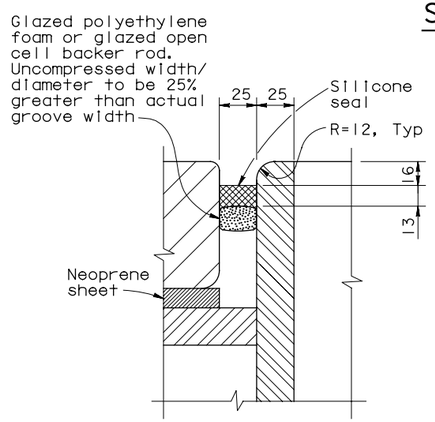

DETAIL C
1:2

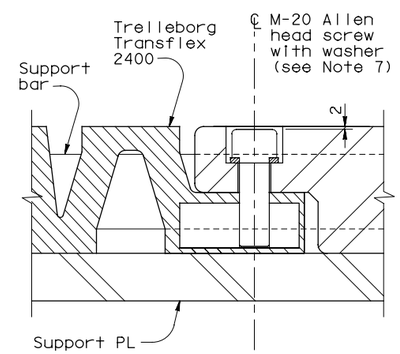

DETAIL D
1:2

NOTES:

1. Use caulking or sealant between gutter and concrete.
2. 40 mm holes in neoprene sheets shall be drilled or punched so that the neoprene is not distorted at the time of installation. See "Hinge KE & KW Expansion Joint Details No.6" sheet.
3. For deck plate layout and details, see "Hinge KE & KW Expansion Joint Details No.1" sheet. For deck plate friction groove pattern, see "Hinge KE & KW Expansion Joint Details No.4" sheet.
4. For mild steel reinforcement in blockout areas, see "Hinge KE & KW Expansion Joint Details No.8" sheet.
5. For channel assembly details, see "Hinge KE & KW Expansion Joint Details No.5" and "Hinge KE & KW Expansion Joint Details No.6" sheets.
6. Place deck plate, support plate and channel assembly so that full bearing is achieved between 1) deck plate and channel assembly and 11) deck plate and support plates as shown in Section A-A.
7. M-20 Allen head screw shall be stainless steel.
8. Gutter shall be placed 75 mm minimum clear from the deck plate and shall be parallel to deck cross slope.
9. For support plate details see "Hinge KE & KW Expansion Joint Details No.7" sheet.
10. Values are for mean temperature of 20°C.
11. All the connection hardware shall be supplied with Trelleborg Transflex 2400. The connection of Transflex 2400 and that of the support bar to the blockout concrete shall be drill and bond dowels.

SUPPLEMENTAL SHEET

CONTRACT CHANGE ORDER NO. _____
SHEET ____ OF ____

ALL DIMENSIONS ARE IN MILLIMETERS UNLESS OTHERWISE SHOWN

SAN FRANCISCO OAKLAND BAY BRIDGE
EAST SPAN SEISMIC SAFETY PROJECT

YBI TRANSITION STRUCTURES - HINGE K

HINGE KE & KW EXPANSION JOINT DETAILS NO.2

DESIGN OVERSIGHT ADE AKINSANYA
SIGN OFF DATE
Rev. Date: 5-18-98

	BY	CHECKED	
DESIGN	C. Redfield	M. Nader	
DETAILS	H. Patel	J. Duxbury	
QUANTITIES	H. Patel	J. Duxbury	

PREPARED FOR THE STATE OF CALIFORNIA DEPARTMENT OF TRANSPORTATION

Jal Birdy
PROJECT ENGINEER

BRIDGE NO. 34-0006 L/R
KILOMETER POST 12.8

ORIGINAL SCALE IN MILLIMETERS FOR REDUCED PLANS 0 10 20 30 40 50 60 70 80 90 100

CU 04
EA 0120F1

DISREGARD PRINTS BEARING EARLIER REVISION DATES

REVISION DATES (PRELIMINARY STAGE ONLY)

SHEET K149A OF 209

FILE => P:\4141-06\CADD\TS\Checked Plans\YBITS #1-100% No. 2_03-08 (Final Renamed)\011212 Hinge K SAS T19 CCO\TYLin sheets\04-0

Jan 6, 2012

USERNAME => fsamson DATE PLOTTED => 1/12/2012 TIME PLOTTED => 4:17:39 PM

DIST.	COUNTY	ROUTE	KILOMETER POST TOTAL PROJECT	SHEET NO.	TOTAL SHEETS
04	SF	80	12.7/13.2	K699A	806

Caltrans Metric

REGISTERED ENGINEER - CIVIL

PLANS APPROVAL DATE

REGISTERED PROFESSIONAL ENGINEER Marwan N. Nader No. C 054426 Exp. 12/31/13 CIVIL STATE OF CALIFORNIA

The State of California or its officers or agents shall not be responsible for the accuracy or completeness of electronic copies of this plan sheet.

T.Y. LIN / MOFFATT & NICHOL
TWO HARRISON STREET
SAN FRANCISCO, CA 94105

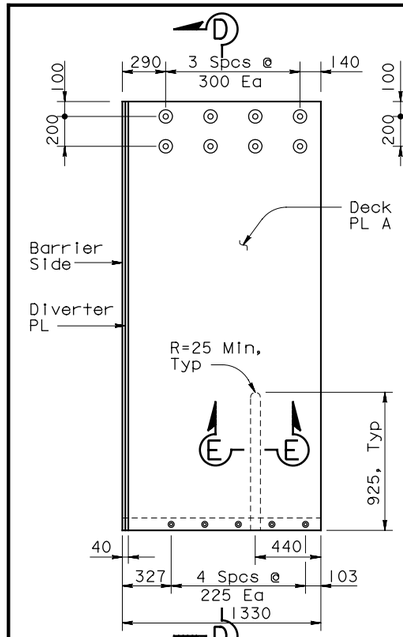

DECK PLATE A
1:20

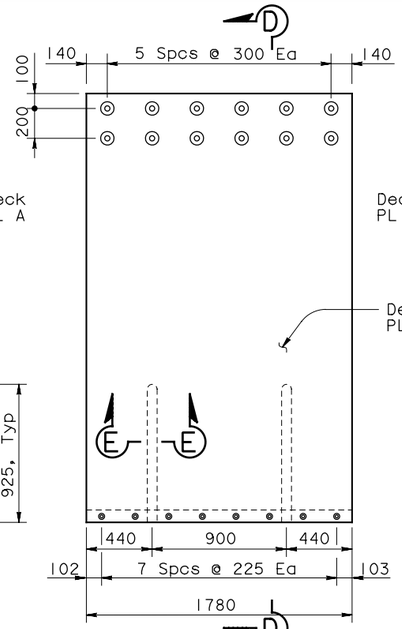

DECK PLATE B
1:20

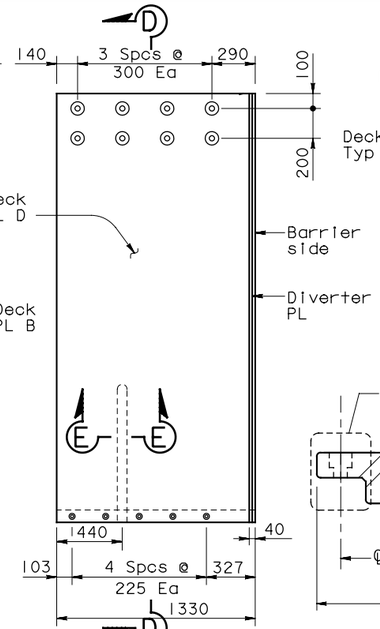

DECK PLATE D
1:20

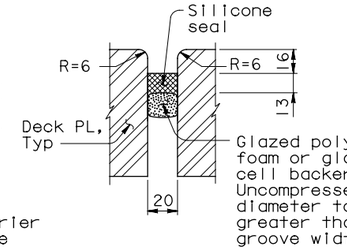

SECTION C-C
1:20

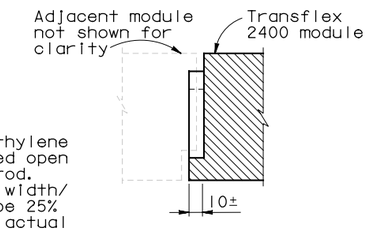

SECTION C'-C'
1:20

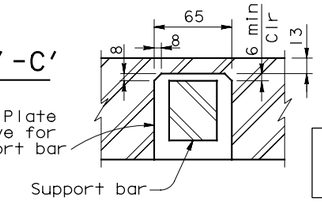

SECTION E-E
1:2.5

Note: Hinge KE & KW Expansion Joints to be furnished by others and installed by the Contractor.

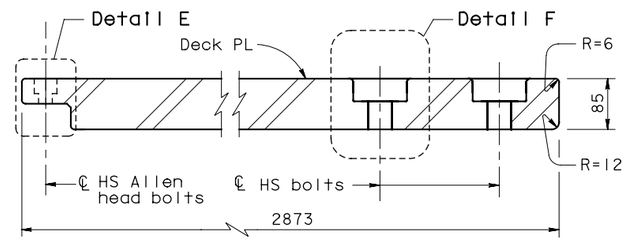

SECTION D-D
1:5

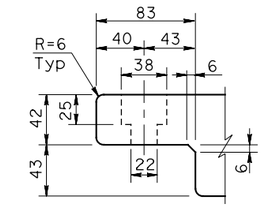

DETAIL E
1:2.5

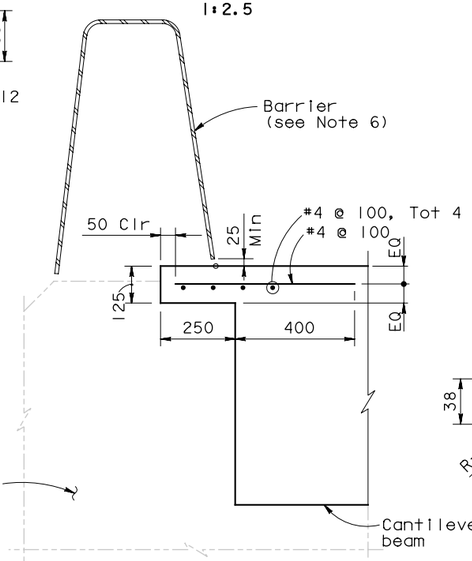

SECTION B'''-B'''
1:10

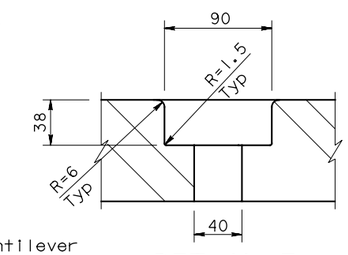

DETAIL F
1:2.5

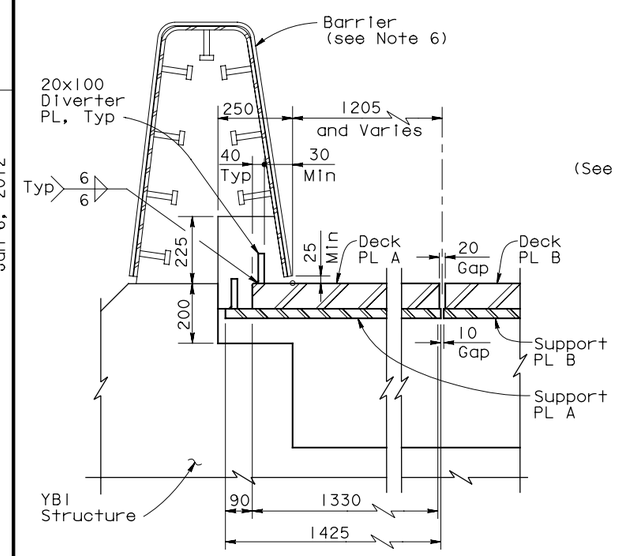

SECTION B-B
1:10

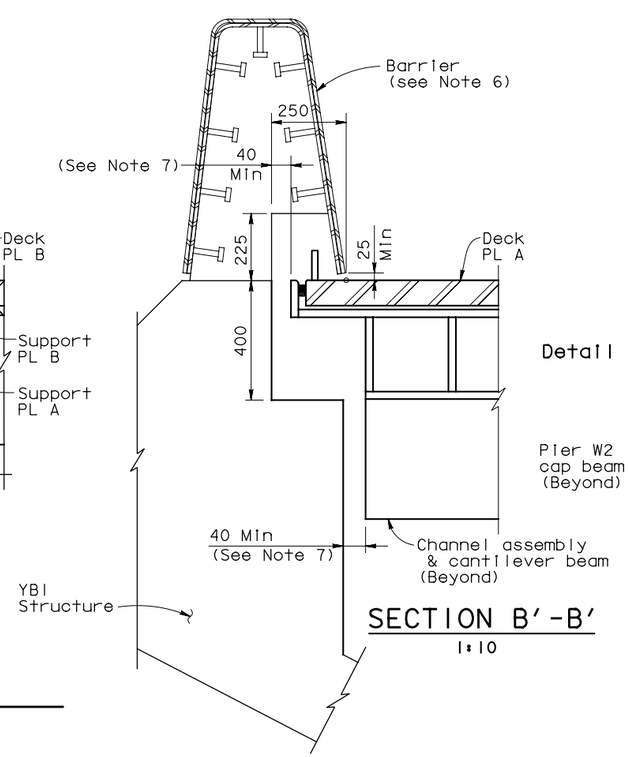

SECTION B'-B'
1:10

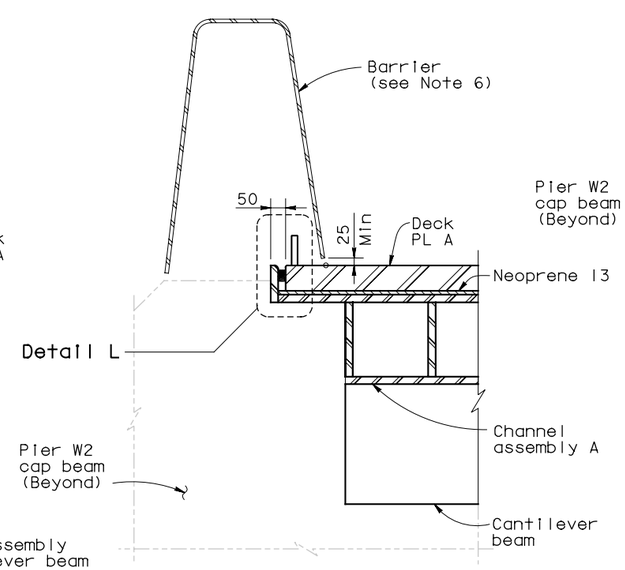

SECTION B''-B''
1:10

NOTES:

1. For deck plate plan see "Hinge KE & KW Expansion Joint Details No.1" sheet.
2. Diverter plate applies to Deck plates A and D and Support plate A only.
3. For bolting of deck plates to channel assembly details, see "Hinge KE & KW Expansion Joint Details No.6" sheet.
4. For connection detail between Trelleborg Transflex 2400 and deck plate see, "Hinge KE & KW Expansion Joint Details No.2" sheet.
5. For Detail L, see "Hinge KE & KW Expansion Joint Details No.6" sheet.
6. For barrier details, see "Hinge K Closure Details No.14" sheet.
7. Minimum clearance of 40 mm shall be provided between the cantilever at SAS blockout and interior face of YBI edge girder to ensure free seismic closing movement.

SUPPLEMENTAL SHEET

CONTRACT CHANGE ORDER NO. _____
SHEET ____ OF ____

ALL DIMENSIONS ARE IN MILLIMETERS UNLESS OTHERWISE SHOWN

SAN FRANCISCO OAKLAND BAY BRIDGE
EAST SPAN SEISMIC SAFETY PROJECT

YBI TRANSITION STRUCTURES - HINGE K

HINGE KE & KW EXPANSION JOINT DETAILS NO.3

DESIGN OVERSIGHT ADE AKINSANYA	DESIGN	BY C. Redfield	CHECKED M. Nader
SIGN OFF DATE	DETAILS	BY H. Patel	CHECKED J. Duxbury
Rev. Date: 5-18-98	QUANTITIES	BY H. Patel	CHECKED J. Duxbury

PREPARED FOR THE STATE OF CALIFORNIA DEPARTMENT OF TRANSPORTATION

Jal Birdy
PROJECT ENGINEER

BRIDGE NO. 34-0006 L/R
KILOMETER POST 12.8

ORIGINAL SCALE IN MILLIMETERS FOR REDUCED PLANS 0 10 20 30 40 50 60 70 80 90 100

CU 04
EA 0120F1

DISREGARD PRINTS BEARING EARLIER REVISION DATES

REVISION DATES (PRELIMINARY STAGE ONLY)

SHEET K150A OF 209

FILE => P:\4141-06\CADD\TS\Checked Plans\YBITS #1-100% No. 2_03-03-08 (Final Renamed)\011212 Hinge K SAS T19 CCO\TYLin sheets\04-01

Jan 6, 2012

TIME PLOTTED => 4:17:48 PM

DATE PLOTTED => 1/12/2012

USERNAME => fsamson

DIST	COUNTY	ROUTE	KILOMETER POST TOTAL PROJECT	SHEET No	TOTAL SHEETS
04	SF	80	12.7/13.2	K700A	806

REGISTERED CIVIL ENGINEER DATE

PLANS APPROVAL DATE

REGISTERED PROFESSIONAL ENGINEER Enrico G. Maggenti No. 46920 Exp. 6/30/13 CIVIL STATE OF CALIFORNIA

The State of California or its officers or agents shall not be responsible for the accuracy or completeness of electronic copies of this plan sheet.

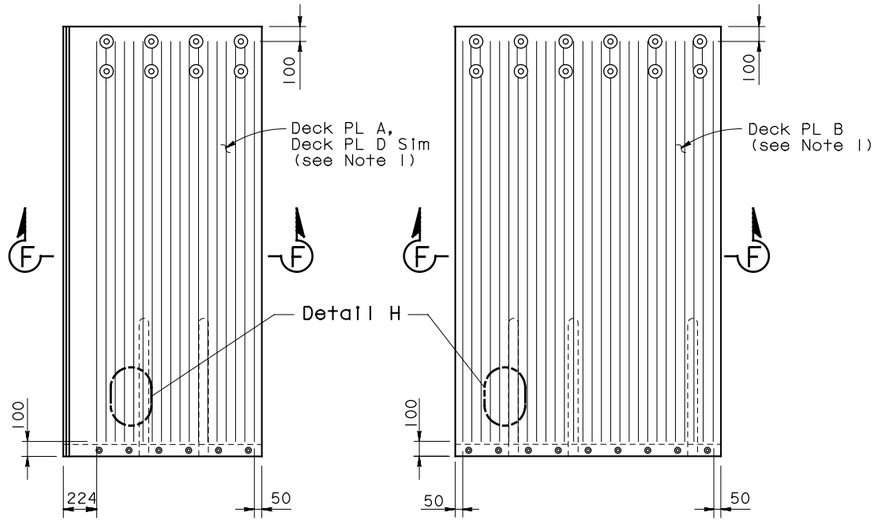

DECK PLATE A/D

(Deck PL A Shown, Deck PL D Similar)

DECK PLATE B

FRICTION PATTERN (See Note 2)

1:20

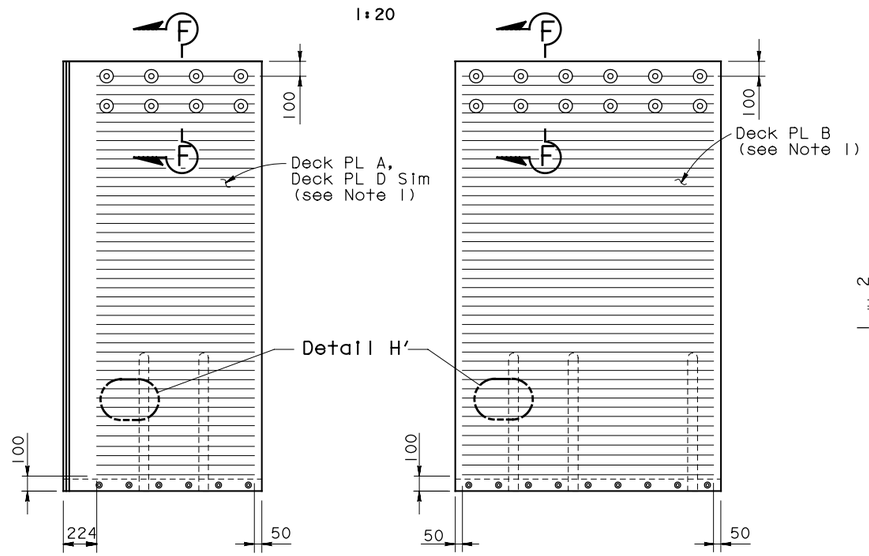

DECK PLATE A/D

(Deck PL A Shown, Deck PL D Similar)

DECK PLATE B

ALT FRICTION PATTERN (See Note 2)

1:20

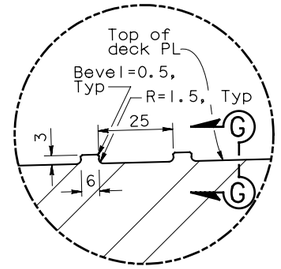

DETAIL G

1:1

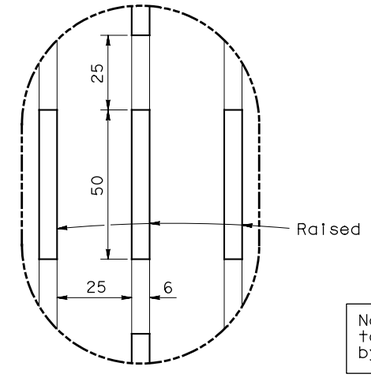

DETAIL H

1:1

Note: Hinge KE & KW Expansion Joints to be furnished by others and installed by the Contractor.

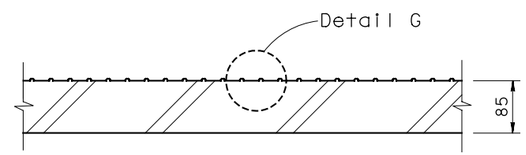

SECTION F-F

1:5

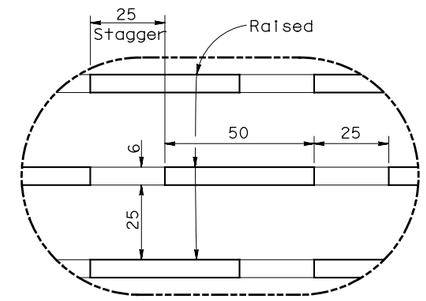

DETAIL H'

1:1

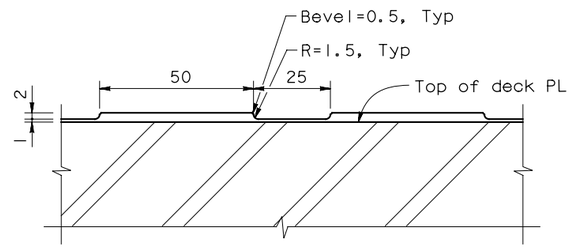

SECTION G-G

1:1

NOTES:

1. For Details not shown, see "Hinge KE & KW Expansion Joint Details No.3" sheet.
2. Friction pattern type shall be selected as directed by the Engineer. Polymer/Aggregate Skid Coat (PASC) may be applied per Engineer's direction.

SUPPLEMENTAL SHEET

CONTRACT CHANGE ORDER NO. _____

SHEET ____ OF ____

SAN FRANCISCO OAKLAND BAY BRIDGE
EAST SPAN SEISMIC SAFETY PROJECT

YBI TRANSITION STRUCTURES - HINGE K

SEISMIC JOINT (TYPE II)

HINGE KE & KW EXPANSION JOINT DETAILS NO.4

Caltrans Metric

MARK	DATE	DESCRIPTIONS	BY	CH'D	CCO#
		REVISIONS			

ALL DIMENSIONS ARE IN MILLIMETERS UNLESS OTHERWISE SHOWN

	BY	CHECKED
DESIGN	R MAGGENTI	M WHITESIDE
DETAILS	R MAGGENTI	M WHITESIDE
QUANTITIES	R MAGGENTI	M WHITESIDE

ORIGINAL SCALE IN MILLIMETERS FOR REDUCED PLANS 0 10 20 30 40 50 60 70 80 90 100

STATE OF CALIFORNIA DEPARTMENT OF TRANSPORTATION

DIVISION OF ENGINEERING SERVICES STRUCTURE DESIGN

SPECIAL DESIGNS BRANCH

CU 04
EA 0120F1

BRIDGE NO. 34-0006 L/R

KILOMETER POST 12.8

DISREGARD PRINTS BEARING EARLIER REVISION DATES

REVISION DATES

SHEET K151A OF 209

Jan 6, 2012

DATE PLOTTED => 1/12/2012
TIME PLOTTED => 41 17:57 PM

FILE => spec_des_br_proj/04-0120S1/2007sd/P:\4141-06\CADD\TS\Checked Plans\YBITS #1-100% No. 2_03-03-08 (Final Renamed)\011212 H

DIST.	COUNTY	ROUTE	KILOMETER POST TOTAL PROJECT	SHEET NO.	TOTAL SHEETS
04	SF	80	12.7/13.2	K701A	806

Caltrans Metric

REGISTERED ENGINEER - CIVIL

PLANS APPROVAL DATE

REGISTERED PROFESSIONAL ENGINEER Marwan N. Nader No. C 054426 Exp. 12/31/13 CIVIL STATE OF CALIFORNIA

The State of California or its officers or agents shall not be responsible for the accuracy or completeness of electronic copies of this plan sheet.

T.Y. LIN / MOFFATT & NICHOL
TWO HARRISON STREET
SAN FRANCISCO, CA 94105

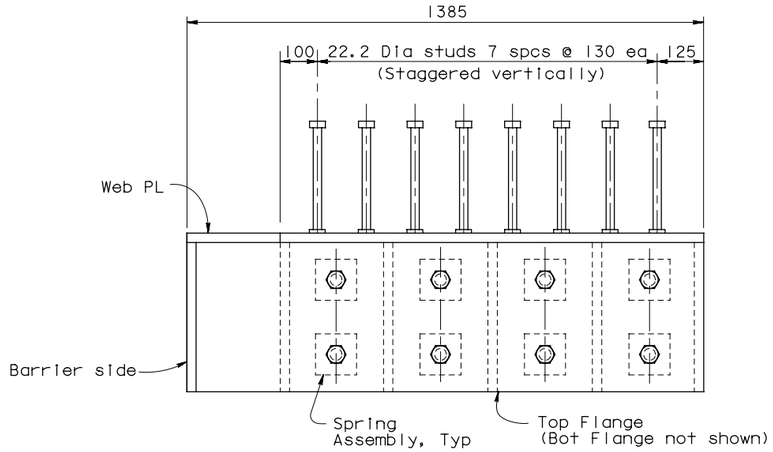

PLAN - BUILT UP CHANNEL ASSEMBLY "A"
NTS

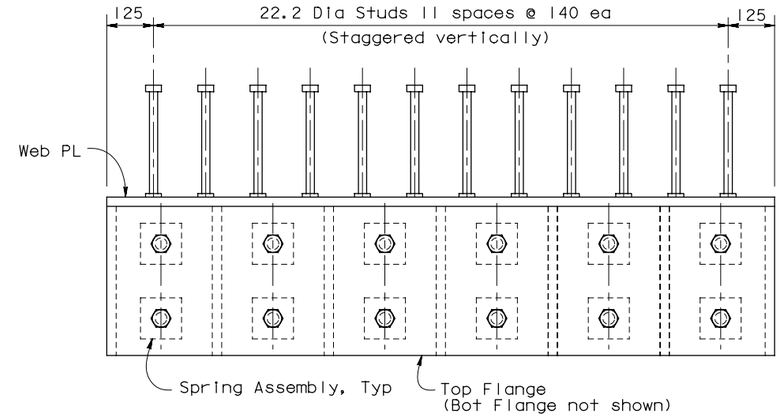

PLAN - BUILT UP CHANNEL ASSEMBLY "B"
NTS

Note: Hinge KE & KW Expansion Joints to be furnished by others and installed by the Contractor.

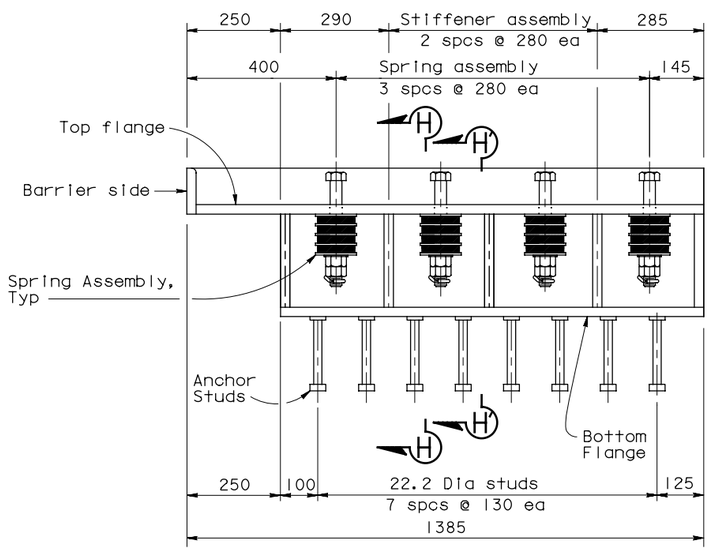

ELEVATION - BUILT UP CHANNEL ASSEMBLY "A"
NTS

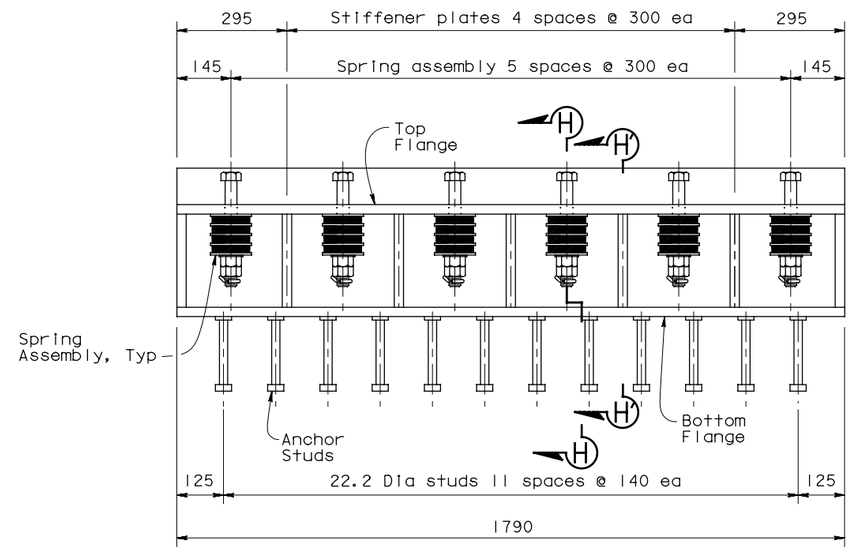

ELEVATION - BUILT UP CHANNEL ASSEMBLY "B"
NTS

SUPPLEMENTAL SHEET

CONTRACT CHANGE ORDER NO. ____
SHEET ___ OF ___

NOTES:

1. For Sections H-H and H'-H', see "Hinge KE & KW Expansion Joint Details No.6" sheet.

ALL DIMENSIONS ARE IN MILLIMETERS UNLESS OTHERWISE SHOWN

SAN FRANCISCO OAKLAND BAY BRIDGE
EAST SPAN SEISMIC SAFETY PROJECT

YBI TRANSITION STRUCTURES - HINGE K

HINGE KE & KW EXPANSION JOINT DETAILS NO.5

DESIGN	BY C. Redfield	CHECKED M. Nader	
DETAILS	BY H. Patel	CHECKED J. Duxbury	
QUANTITIES	BY H. Patel	CHECKED J. Duxbury	

DESIGN OVERSIGHT ADE AKINSANYA

SIGN OFF DATE

Rev. Date: 5-18-98

PREPARED FOR THE STATE OF CALIFORNIA DEPARTMENT OF TRANSPORTATION

Jal Birdy
PROJECT ENGINEER

BRIDGE NO. 34-0006 L/R
KILOMETER POST 12.8

CU 04
EA 0120F1

DISREGARD PRINTS BEARING EARLIER REVISION DATES

REVISION DATES (PRELIMINARY STAGE ONLY)

SHEET K152A OF 209

ORIGINAL SCALE IN MILLIMETERS FOR REDUCED PLANS 0 10 20 30 40 50 60 70 80 90 100

FILE => P:\4141-06\CADD\TS\Checked Plans\YBITS #1-100% No. 2_03-03-08 (Final Renamed)\011212 Hinge K SAS T19 CCO\TYLin sheets\04-01

Jan 6, 2012

TIME PLOTTED => 4:18:07 PM

DATE PLOTTED => 1/12/2012

USERNAME => fsamson

DIST.	COUNTY	ROUTE	KILOMETER POST TOTAL PROJECT	SHEET NO.	TOTAL SHEETS
04	SF	80	12.7/13.2	K702A	806

Caltrans Metric

REGISTERED ENGINEER - CIVIL

PLANS APPROVAL DATE

REGISTERED PROFESSIONAL ENGINEER Marwan N. Nader No. C 054426 Exp. 12/31/13 CIVIL STATE OF CALIFORNIA

The State of California or its officers or agents shall not be responsible for the accuracy or completeness of electronic copies of this plan sheet.

T.Y. LIN / MOFFATT & NICHOL
TWO HARRISON STREET
SAN FRANCISCO, CA 94105

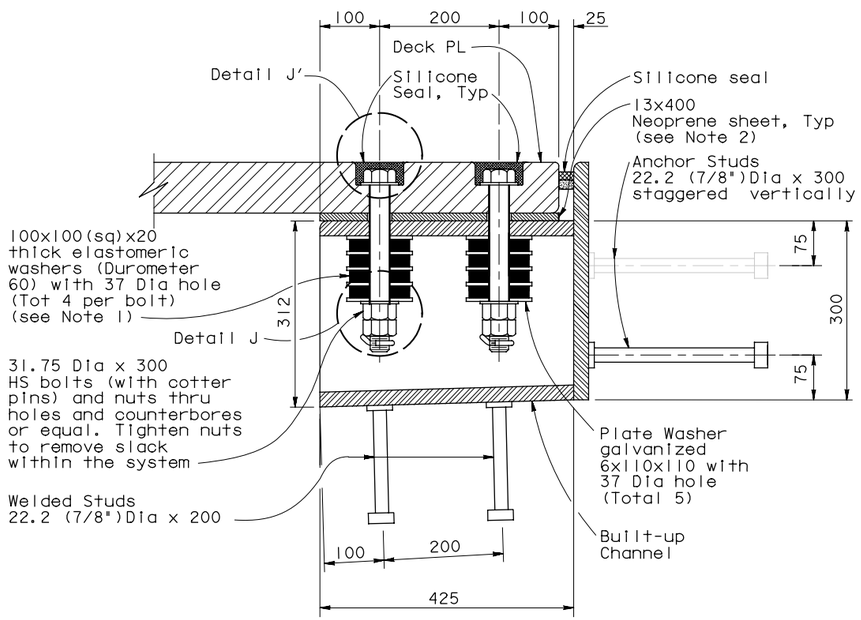

SECTION H-H
NTS

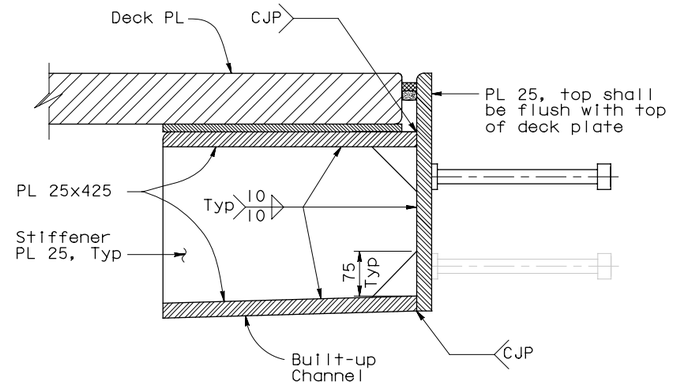

SECTION H'-H'
NTS

Note: Hinge KE & KW Expansion Joints to be furnished by others and installed by the Contractor.

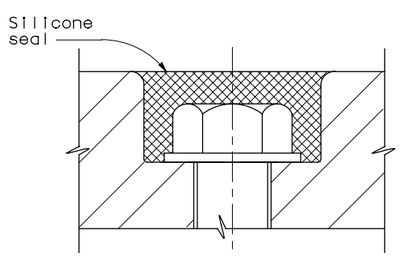

DETAIL J'
NTS

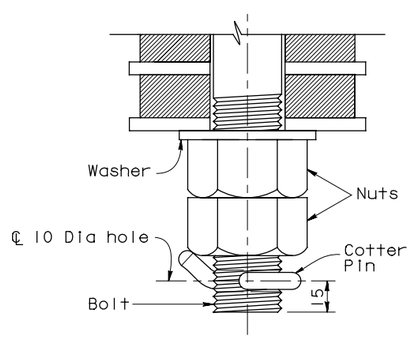

DETAIL J
NTS

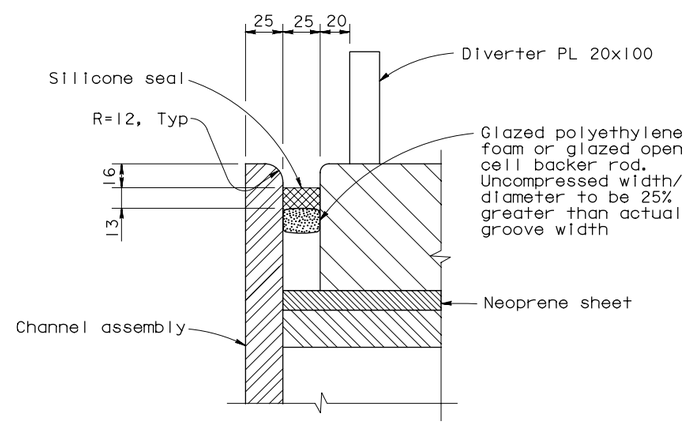

DETAIL L
NTS

NOTES:

1. Elastomeric washers shall be plain neoprene.
2. The length of the 13x400 mm neoprene sheet below the deck plate is 1360 mm and 1790 mm long for modules "A" and "B" respectively.

SUPPLEMENTAL SHEET

CONTRACT CHANGE ORDER NO. _____
SHEET ____ OF ____

ALL DIMENSIONS ARE IN MILLIMETERS UNLESS OTHERWISE SHOWN

SAN FRANCISCO OAKLAND BAY BRIDGE
EAST SPAN SEISMIC SAFETY PROJECT

YBI TRANSITION STRUCTURES - HINGE K

HINGE KE & KW EXPANSION JOINT DETAILS NO.6

DESIGN OVERSIGHT ADE AKINSANYA
SIGN OFF DATE
Rev. Date: 5-18-98

	BY		CHECKED	
DESIGN	BY	C. Redfield	CHECKED	M. Nader
DETAILS	BY	H. Patel	CHECKED	J. Duxbury
QUANTITIES	BY	H. Patel	CHECKED	J. Duxbury

PREPARED FOR THE STATE OF CALIFORNIA DEPARTMENT OF TRANSPORTATION

Jal Birdy
PROJECT ENGINEER

BRIDGE NO. 34-0006 L/R
KILOMETER POST 12.8

ORIGINAL SCALE IN MILLIMETERS FOR REDUCED PLANS 0 10 20 30 40 50 60 70 80 90 100

CU 04
EA 0120F1

DISREGARD PRINTS BEARING EARLIER REVISION DATES

REVISION DATES (PRELIMINARY STAGE ONLY)

SHEET K153A OF 209

FILE => P:\4141-06\CADD\TS\Checked Plans\YBITS #1-100% No. 2_03-03-08 (Final Renamed)\011212 Hinge K SAS T19 CCO\TYLin sheets\04-01

Jan 6, 2012

USERNAME => fsamson DATE PLOTTED => 1/12/2012 TIME PLOTTED => 4:18:15 PM

DIST.	COUNTY	ROUTE	KILOMETER POST TOTAL PROJECT	SHEET NO.	TOTAL SHEETS
04	SF	80	12.7/13.2	K703A	806

REGISTERED ENGINEER - CIVIL

PLANS APPROVAL DATE

REGISTERED PROFESSIONAL ENGINEER Marwan N. Nader No. C 054426 Exp. 12/31/13 CIVIL STATE OF CALIFORNIA

The State of California or its officers or agents shall not be responsible for the accuracy or completeness of electronic copies of this plan sheet.

T.Y. LIN / MOFFATT & NICHOL
TWO HARRISON STREET
SAN FRANCISCO, CA 94105

Note: Hinge KE & KW Expansion Joints to be furnished by others and installed by the Contractor.

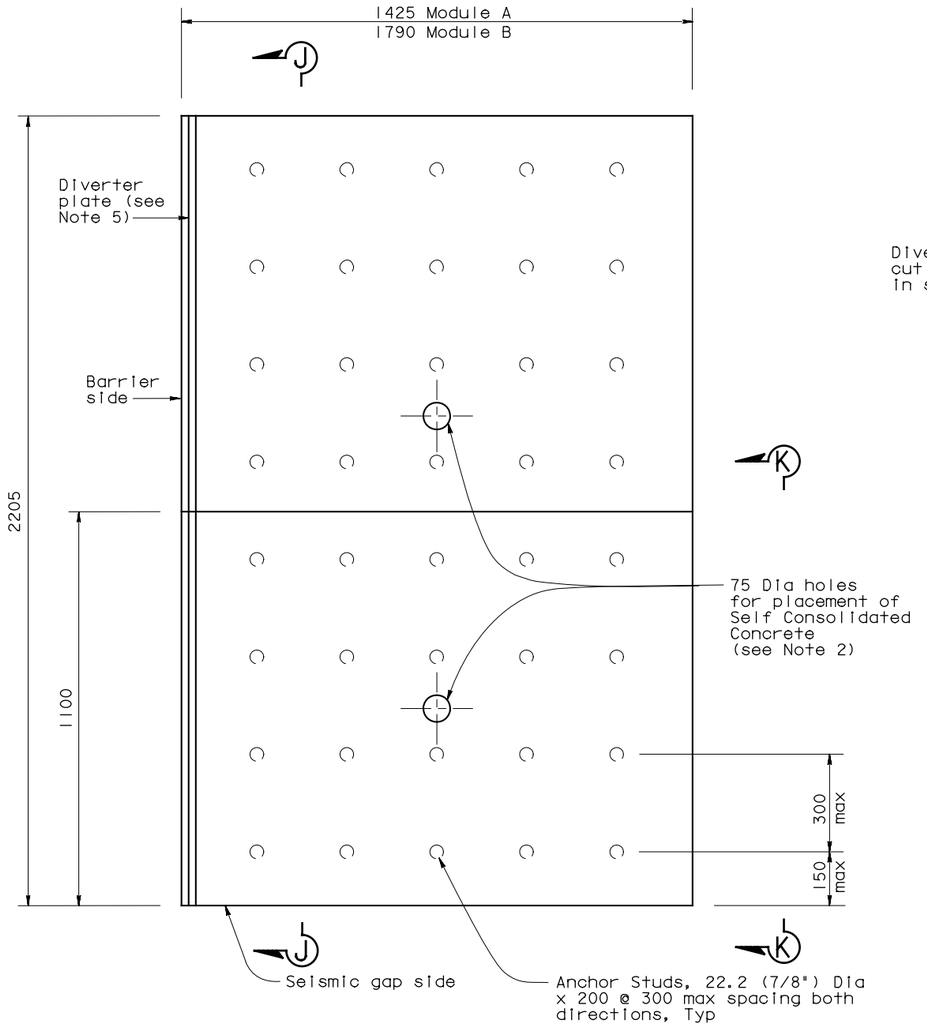

PLAN-SUPPORT PLATE
NTS

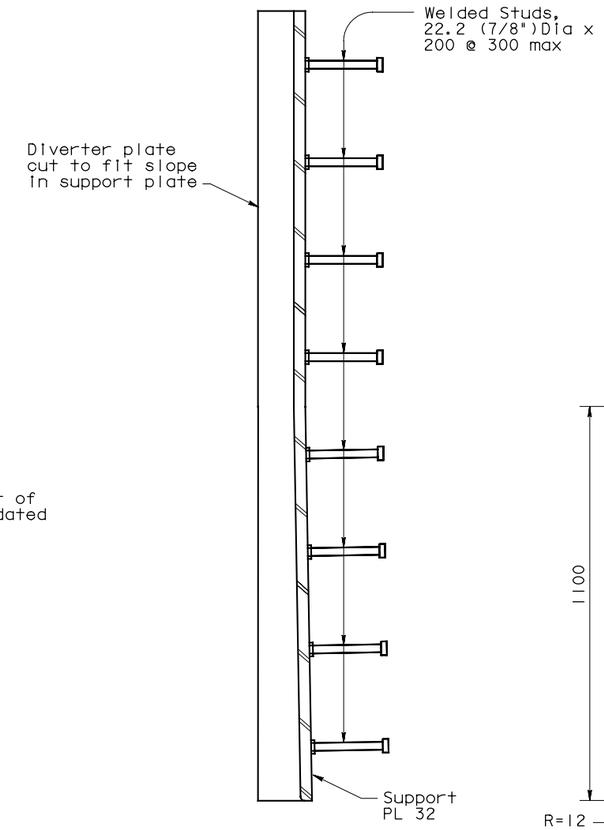

SECTION J-J
NTS

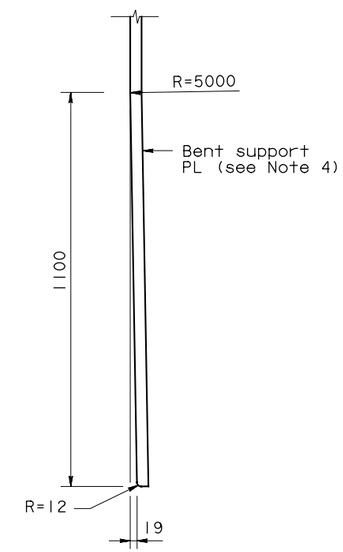

SECTION K-K
NTS

NOTES:

1. Support Plate A shown, Support Plate B similar.
2. Exact location of 75 Dia holes to be determined prior to support plate fabrication.
3. Anchor holes for Trelleborg Transflex 2400 and Trelleborg Support Bar connection not shown. Coordinate anchor hole location with Transflex modules.
4. At the Contractor's option, the support plate may be machined in lieu of bending.
5. For diverter plate details see "Hinge KE & KW Expansion Joint Details No.3" sheet. Diverter plate applies only to support plate A.

SUPPLEMENTAL SHEET

CONTRACT CHANGE ORDER NO. _____
SHEET ____ OF ____

ALL DIMENSIONS ARE IN MILLIMETERS UNLESS OTHERWISE SHOWN

SAN FRANCISCO OAKLAND BAY BRIDGE
EAST SPAN SEISMIC SAFETY PROJECT

YBI TRANSITION STRUCTURES - HINGE K

HINGE KE & KW EXPANSION JOINT DETAILS NO.7

DESIGN OVERSIGHT ADE AKINSANYA
SIGN OFF DATE

	BY	CHECKED
DESIGN	C. Redfield	M. Nader
DETAILS	H. Patel	J. Duxbury
QUANTITIES	H. Patel	J. Duxbury

PREPARED FOR THE STATE OF CALIFORNIA DEPARTMENT OF TRANSPORTATION

Jal Birdy
PROJECT ENGINEER

BRIDGE NO. 34-0006 L/R
KILOMETER POST 12.8

CU 04
EA 0120F1

DISREGARD PRINTS BEARING EARLIER REVISION DATES

REVISION DATES (PRELIMINARY STAGE ONLY)

SHEET K154A OF 209

Rev. Date: 5-18-98

ORIGINAL SCALE IN MILLIMETERS FOR REDUCED PLANS 0 10 20 30 40 50 60 70 80 90 100

FILE => P:\4141-06\CADD\TS\Checked Plans\YBITS #1-100% No. 2_03-03-08 (Final Renamed)\011212 Hinge K SAS T19 CCO\TYLin sheets\04-0

Jan 6, 2012

USERNAME => fsamson DATE PLOTTED => 1/12/2012 TIME PLOTTED => 4:18:28 PM

DIST.	COUNTY	ROUTE	KILOMETER POST TOTAL PROJECT	SHEET NO.	TOTAL SHEETS
04	SF	80	12.7/13.2	K704A	806

Caltrans Metric

REGISTERED ENGINEER - CIVIL

PLANS APPROVAL DATE

REGISTERED PROFESSIONAL ENGINEER Marwan N. Nader No. C 054426 Exp. 12/31/13 CIVIL STATE OF CALIFORNIA

The State of California or its officers or agents shall not be responsible for the accuracy or completeness of electronic copies of this plan sheet.

T.Y. LIN / MOFFATT & NICHOL
TWO HARRISON STREET
SAN FRANCISCO, CA 94105

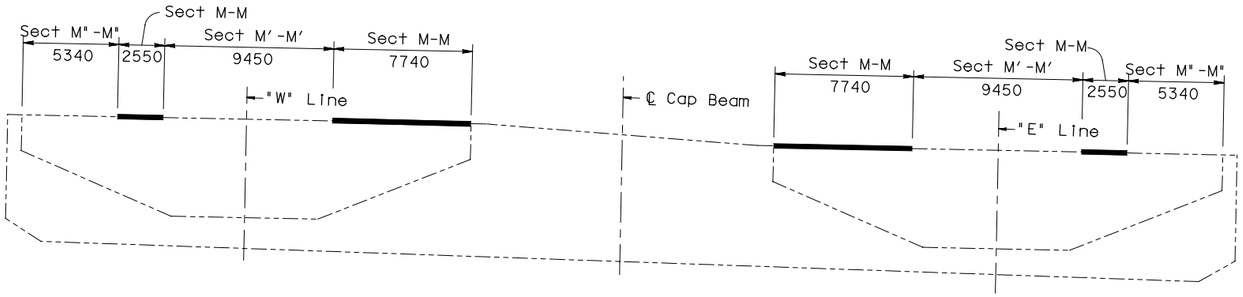

LOCATION - SECTION M-M

NTS

Note: Hinge KE & KW Expansion Joints to be furnished by others and installed by the Contractor.

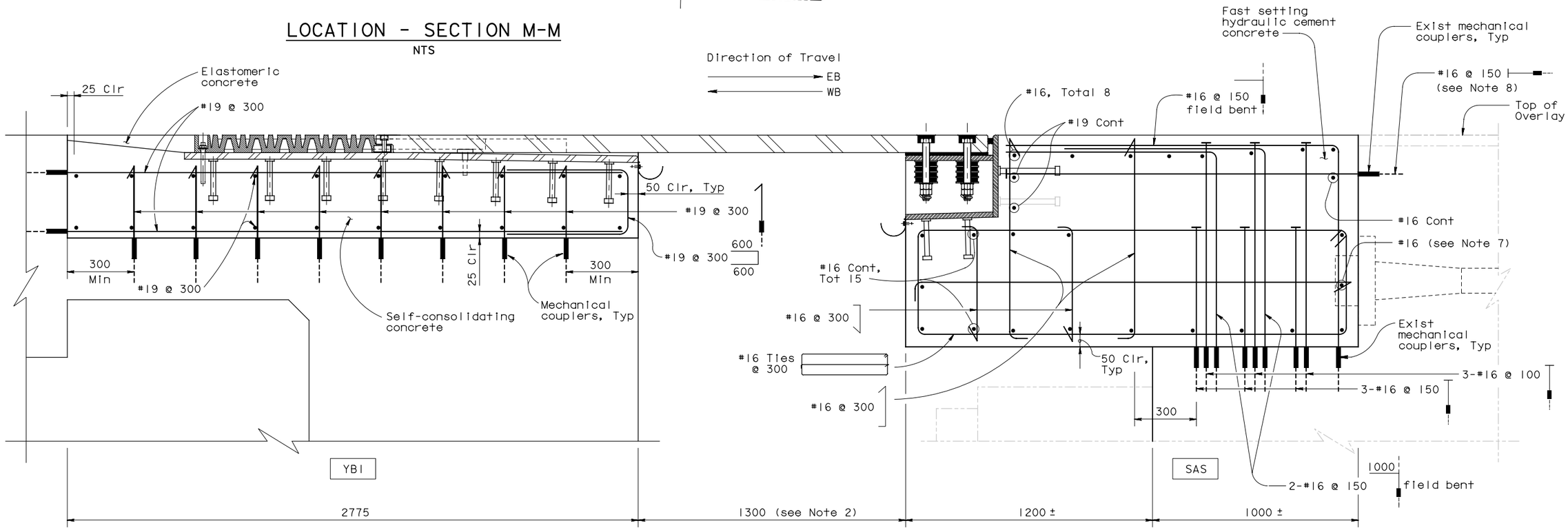

SECTION M-M

1:10

LEGEND:

|— Indicates "T" head reinforcement.

NOTES:

1. Rebars with mechanical couplers shall extend beyond blockout limits by at least 50 db.
2. Values are for mean temperature of 20°C.
3. Contractor shall locate all existing mechanical couplers.
4. Contractor shall connect reinforcement to existing rebar couplers at blockout limits.
5. Rebars may be relocated to match existing couplers.
6. Mechanical couplers at SAS side provided by Others.
7. Rebar shall be discontinued 25 mm clear of postensionong hardware.
8. Rebar may be bent horizontally to clear anchor studs on channel assembly.

SUPPLEMENTAL SHEET

CONTRACT CHANGE ORDER NO. _____
SHEET ____ OF ____

ALL DIMENSIONS ARE IN MILLIMETERS UNLESS OTHERWISE SHOWN

SAN FRANCISCO OAKLAND BAY BRIDGE
EAST SPAN SEISMIC SAFETY PROJECT

YBI TRANSITION STRUCTURES - HINGE K

HINGE KE & KW EXPANSION JOINT DETAILS NO.8

DESIGN OVERSIGHT ADE AKINSANYA	DESIGN BY C. Redfield	CHECKED M. Nader	PREPARED FOR THE STATE OF CALIFORNIA DEPARTMENT OF TRANSPORTATION
SIGN OFF DATE	DETAILS BY H. Patel	CHECKED J. Duxbury	Jal Birdy, PROJECT ENGINEER
Rev. Date: 5-18-98	QUANTITIES BY H. Patel	CHECKED J. Duxbury	CU 04 EA 0120F1

BRIDGE NO. 34-0006 L/R
KILOMETER POST 12.8

DISREGARD PRINTS BEARING EARLIER REVISION DATES

REVISION DATES (PRELIMINARY STAGE ONLY)

SHEET K155A OF 209

ORIGINAL SCALE IN MILLIMETERS FOR REDUCED PLANS 0 10 20 30 40 50 60 70 80 90 100

FILE => P:\4141-06\CADD\TS\Checked Plans\YBITS #1-100% No. 2_03-03-08 (Final Renamed)\011212 Hinge K SAS T19 CCO\TYLin sheets\04-01

Jan 6, 2012

USERNAME => fsamson DATE PLOTTED => 1/12/2012 TIME PLOTTED => 4:18:37 PM

DIST.	COUNTY	ROUTE	KILOMETER POST TOTAL PROJECT	SHEET NO.	TOTAL SHEETS
04	SF	80	12.7/13.2	K705A	806

REGISTERED ENGINEER - CIVIL

PLANS APPROVAL DATE

REGISTERED PROFESSIONAL ENGINEER Marwan N. Nader No. C 054426 Exp. 12/31/13 CIVIL STATE OF CALIFORNIA

The State of California or its officers or agents shall not be responsible for the accuracy or completeness of electronic copies of this plan sheet.

T.Y. LIN / MOFFATT & NICHOL
TWO HARRISON STREET
SAN FRANCISCO, CA 94105

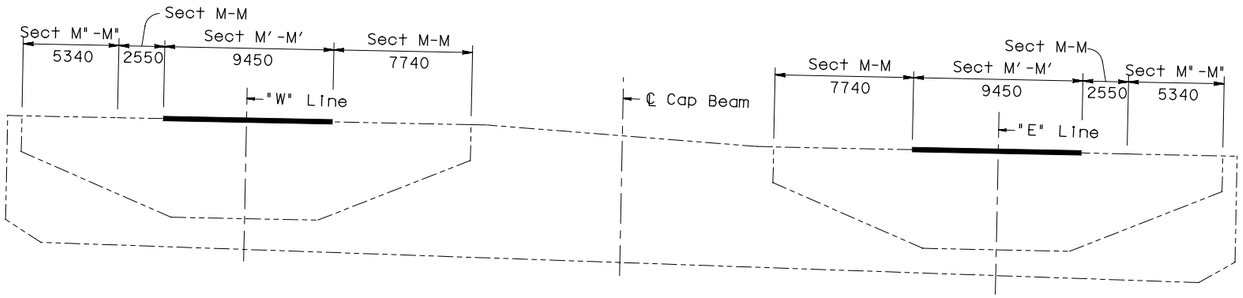

LOCATION - SECTION M'-M'

NTS

Note: Hinge KE & KW Expansion Joints to be furnished by others and installed by the Contractor.

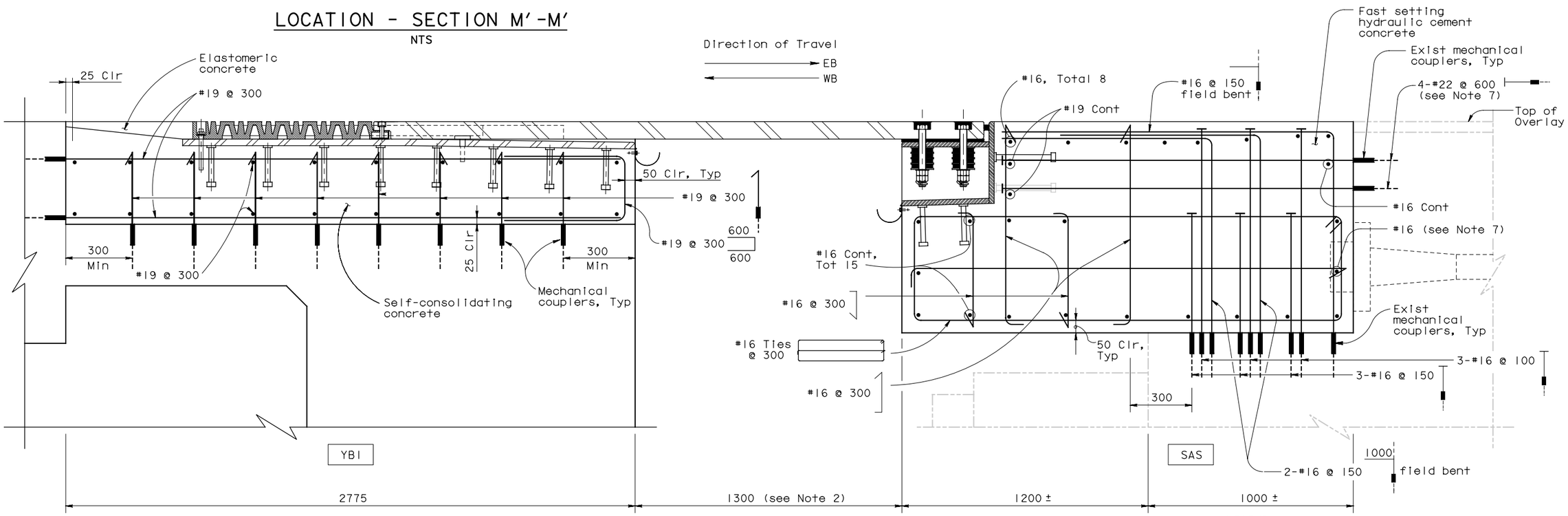

SECTION M'-M'

1:10

LEGEND:

|—— Indicates "T" head reinforcement.

NOTES:

1. Rebars with mechanical couplers shall extend beyond blockout limits by at least 50 d_b.
2. Values are for mean temperature 20°C.
3. Contractor shall locate all existing mechanical couplers.
4. Contractor shall connect reinforcement to existing rebar couplers at blockout limits.
5. Rebars may be relocated to match existing couplers.
6. Mechanical couplers at SAS side provided by Others.
7. At locations where the spacing between continuity tendons is 500 mm or less, 2-#22 bars may be placed vertically. Rebar may be bent horizontally to clear anchor studs on channel assembly.
8. Rebar shall be discontinued 25 mm clear of postensioning hardware.

SUPPLEMENTAL SHEET

CONTRACT CHANGE ORDER NO. _____
SHEET ____ OF ____

ALL DIMENSIONS ARE IN MILLIMETERS UNLESS OTHERWISE SHOWN

SAN FRANCISCO OAKLAND BAY BRIDGE
EAST SPAN SEISMIC SAFETY PROJECT

YBI TRANSITION STRUCTURES - HINGE K

HINGE KE & KW EXPANSION JOINT DETAILS NO. 9

DESIGN OVERSIGHT ADE AKINSANYA	DESIGN BY C. Redfield	CHECKED M. Nader	PREPARED FOR THE STATE OF CALIFORNIA DEPARTMENT OF TRANSPORTATION
SIGN OFF DATE	DETAILS BY H. Patel	CHECKED J. Duxbury	
Rev. Date: 5-18-98	QUANTITIES BY H. Patel	CHECKED J. Duxbury	

Jal Birdy
PROJECT ENGINEER

BRIDGE NO. 34-0006 L/R
KILOMETER POST 12.8

CU 04
EA 0120F1

ORIGINAL SCALE IN MILLIMETERS FOR REDUCED PLANS 0 10 20 30 40 50 60 70 80 90 100

DISREGARD PRINTS BEARING EARLIER REVISION DATES

REVISION DATES (PRELIMINARY STAGE ONLY)

SHEET K156A OF 209

FILE => P:\4141-06\CADD\TS\Checked Plans\YBITS #1-100% No. 2_03-03-08 (Final Renamed)\011212 Hinge K SAS T19 CCO\TYLin sheets\04-01

Jan 6, 2012

USERNAME => fsamson DATE PLOTTED => 1/12/2012 TIME PLOTTED => 4:18:44 PM

DIST.	COUNTY	ROUTE	KILOMETER POST TOTAL PROJECT	SHEET NO.	TOTAL SHEETS
04	SF	80	12.7/13.2	K705AA	806

REGISTERED ENGINEER - CIVIL

PLANS APPROVAL DATE

REGISTERED PROFESSIONAL ENGINEER Marwan N. Nader No. C 054426 Exp. 12/31/13 CIVIL STATE OF CALIFORNIA

The State of California or its officers or agents shall not be responsible for the accuracy or completeness of electronic copies of this plan sheet.

T.Y. LIN / MOFFATT & NICHOL
TWO HARRISON STREET
SAN FRANCISCO, CA 94105

Caltrans Metric

Note: Hinge KE & KW Expansion Joints to be furnished by others and installed by the Contractor.

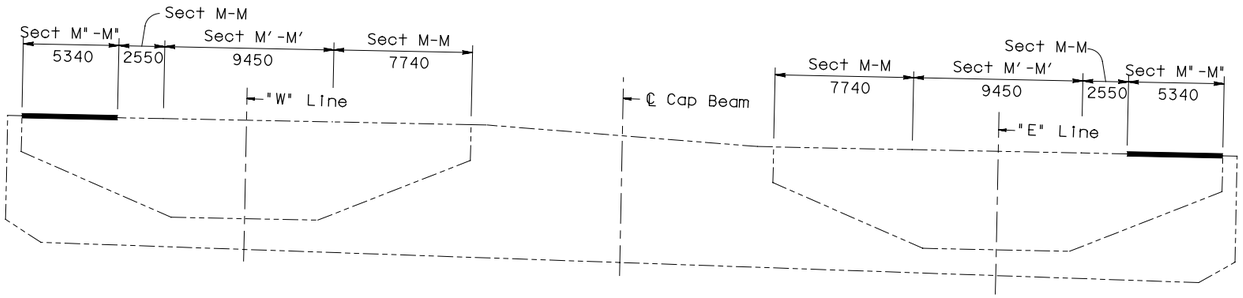

LOCATION - SECTION M"-M"

NTS

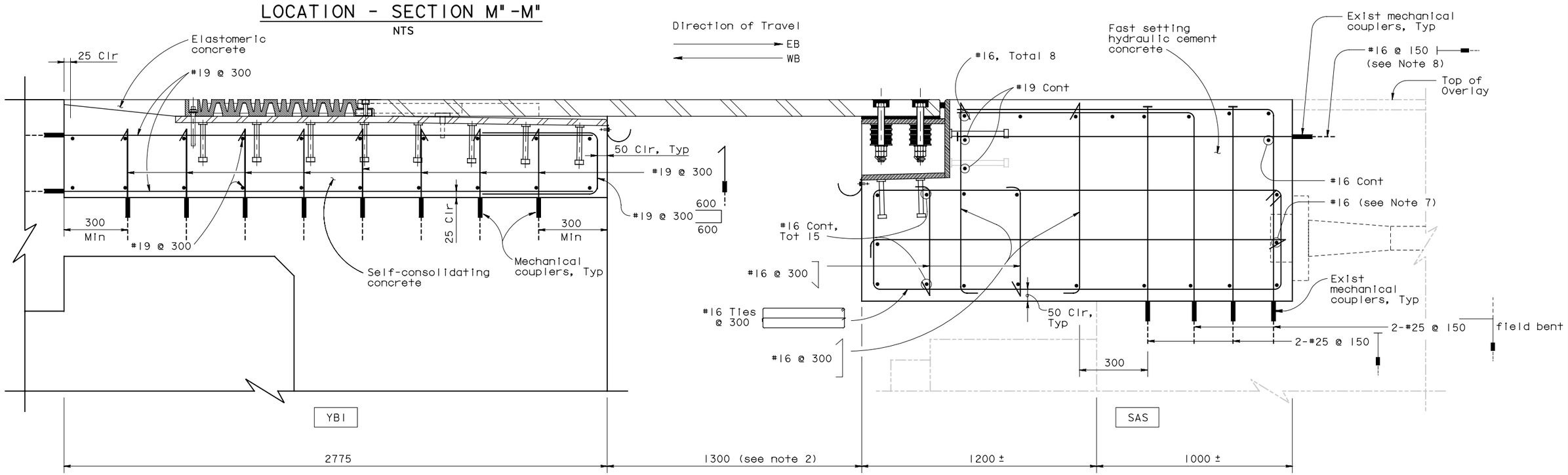

SECTION M"-M"

1:10

LEGEND:

|— Indicates "T" head reinforcement.

NOTES:

1. Rebars with mechanical couplers shall extend beyond blockout limits by at least 50 d_b.
2. Values are for mean temperature 20°C.
3. Contractor shall locate all existing mechanical couplers.
4. Contractor shall connect reinforcement to existing rebar couplers at blockout limits.
5. Rebars may be relocated to match existing couplers.
6. Mechanical couplers at SAS side provided by Others.
7. Rebar shall be discontinued 25 mm clear of postensionong hardware.
8. Rebar may be bent horizontally to clear anchor studs on channel assembly.

SUPPLEMENTAL SHEET

CONTRACT CHANGE ORDER NO. _____
SHEET ____ OF ____

ALL DIMENSIONS ARE IN MILLIMETERS UNLESS OTHERWISE SHOWN

SAN FRANCISCO OAKLAND BAY BRIDGE
EAST SPAN SEISMIC SAFETY PROJECT

YBI TRANSITION STRUCTURES - HINGE K

HINGE KE & KW EXPANSION JOINT DETAILS NO. 10

DESIGN OVERSIGHT ADE AKINSANYA

SIGN OFF DATE

	BY		CHECKED	
DESIGN	BY	C. Redfield	CHECKED	M. Nader
DETAILS	BY	H. Patel	CHECKED	J. Duxbury
QUANTITIES	BY	H. Patel	CHECKED	J. Duxbury

PREPARED FOR THE STATE OF CALIFORNIA DEPARTMENT OF TRANSPORTATION

Jal Birdy
PROJECT ENGINEER

BRIDGE NO. 34-0006 L/R
KILOMETER POST 12.8

CU 04
EA 0120F1

DISREGARD PRINTS BEARING EARLIER REVISION DATES

REVISION DATES (PRELIMINARY STAGE ONLY)

SHEET K156AA OF 209

Rev. Date: 5-18-98

ORIGINAL SCALE IN MILLIMETERS FOR REDUCED PLANS 0 10 20 30 40 50 60 70 80 90 100

Jan 6, 2012

USERNAME => fsamson DATE PLOTTED => 1/12/2012 TIME PLOTTED => 4:18:54 PM

FILE => P:\4141-06\CADD\TS\Checked Plans\YBITS #1-100% No. 2_03-03-08 (Final Renamed)\011212 Hinge K SAS T19 CCO\TYLin sheets\04-01

DIST.	COUNTY	ROUTE	KILOMETER POST TOTAL PROJECT	SHEET NO.	TOTAL SHEETS
04	SF	80	12.7/13.2	K705BA	806

Caltrans Metric

REGISTERED ENGINEER - CIVIL

PLANS APPROVAL DATE

REGISTERED PROFESSIONAL ENGINEER Marwan N. Nader No. C 054426 Exp. 12/31/13 CIVIL STATE OF CALIFORNIA

The State of California or its officers or agents shall not be responsible for the accuracy or completeness of electronic copies of this plan sheet.

T.Y. LIN / MOFFATT & NICHOL
TWO HARRISON STREET
SAN FRANCISCO, CA 94105

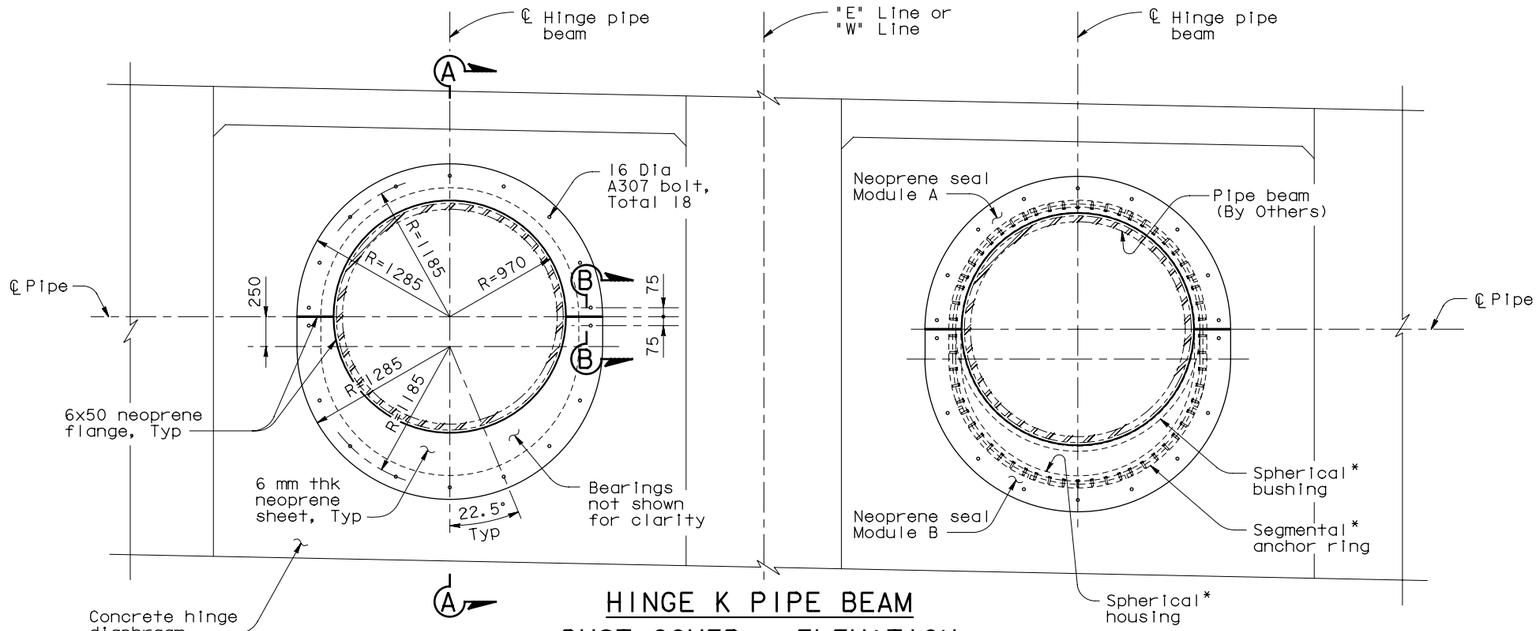

HINGE K PIPE BEAM DUST COVER - ELEVATION

1:25

(WB Shown, EB Similar)

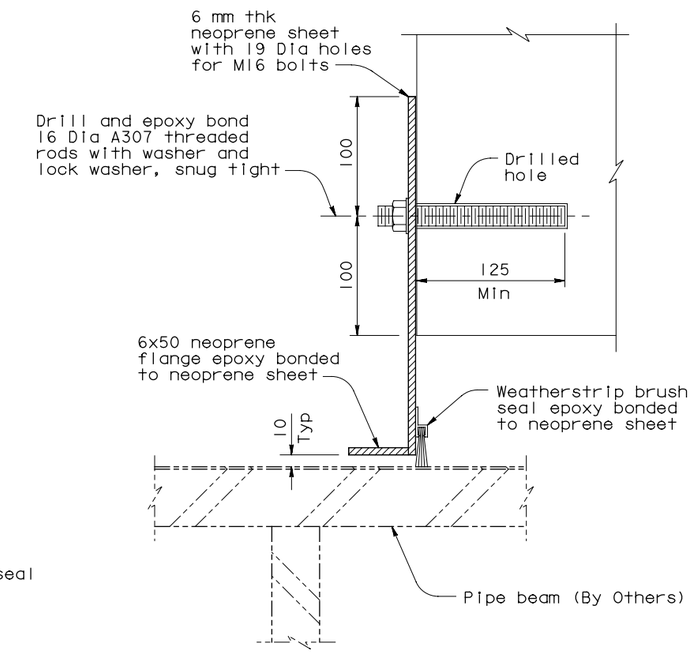

DETAIL A (Detail A' Similar)

1:2.5

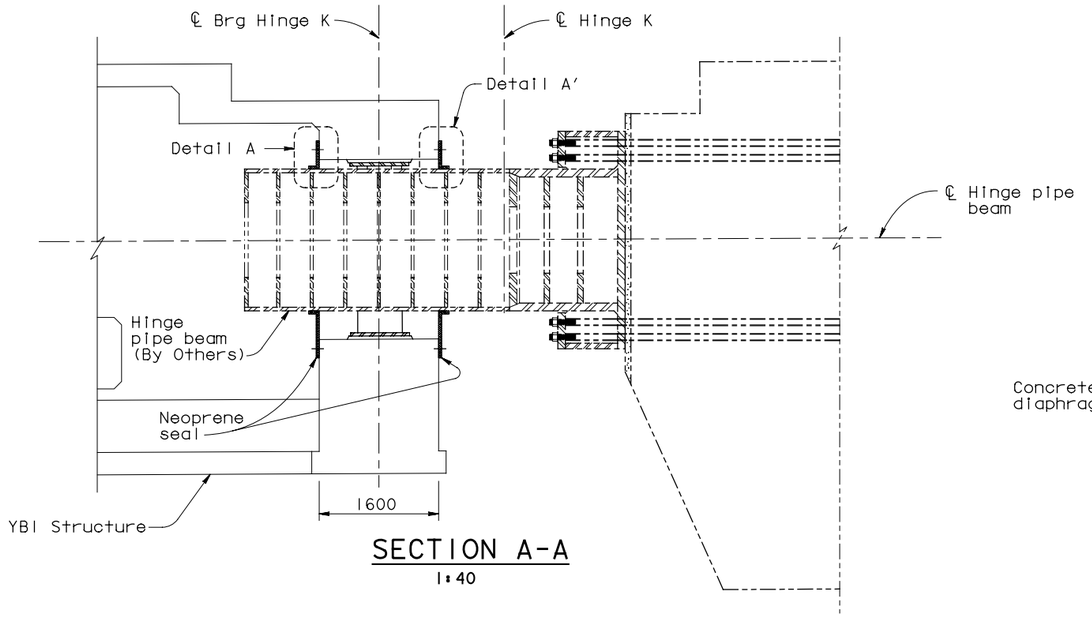

SECTION A-A

1:40

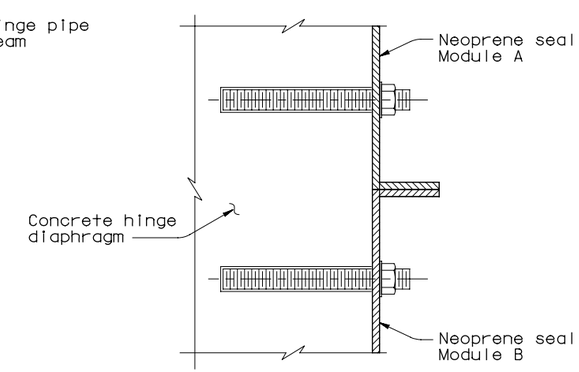

SECTION B-B

1:2.5

NOTES:

* Furnished by Others; Erection in this contract.

SUPPLEMENTAL SHEET

CONTRACT CHANGE ORDER NO. _____
SHEET ____ OF ____

SAN FRANCISCO OAKLAND BAY BRIDGE
EAST SPAN SEISMIC SAFETY PROJECT

YBI TRANSITION STRUCTURES - HINGE K

HINGE K PIPE BEAM DUST COVER DETAILS

DESIGN OVERSIGHT ADE AKINSANYA		DESIGN BY N. Vo	CHECKED M. Nader	PREPARED FOR THE STATE OF CALIFORNIA DEPARTMENT OF TRANSPORTATION
SIGN OFF DATE		DETAILS BY H. Patel	CHECKED J. Duxbury	
		QUANTITIES BY H. Patel	CHECKED J. Duxbury	

Jal Birdy
PROJECT ENGINEER

BRIDGE NO. 34-0006 L/R
KILOMETER POST 12.8

CU 04
EA 0120F1

DISREGARD PRINTS BEARING EARLIER REVISION DATES

REVISION DATES (PRELIMINARY STAGE ONLY)

SHEET K156BA OF 209

Rev. Date: 5-18-98

ORIGINAL SCALE IN MILLIMETERS FOR REDUCED PLANS 0 10 20 30 40 50 60 70 80 90 100

FILE => P:\4141-06\CADD\TS\Checked Plans\YBITS #1-100% No. 2_03-03-08 (Final Renamed)\011212 Hinge K SAS T19 CCO\TYLin sheets\04-01

Jan 6, 2012

USERNAME => fsamson DATE PLOTTED => 1/12/2012 TIME PLOTTED => 4:19:02 PM

DIST.	COUNTY	ROUTE	KILOMETER POST TOTAL PROJECT	SHEET NO.	TOTAL SHEETS
04	SF	80	12.7/13.2	K708A	806

REGISTERED ENGINEER - CIVIL

PLANS APPROVAL DATE

REGISTERED PROFESSIONAL ENGINEER A.L. ELY No. 18880 Exp. 6-30-13 CIVIL STATE OF CALIFORNIA

The State of California or its officers or agents shall not be responsible for the accuracy or completeness of electronic copies of this plan sheet.

T.Y. LIN / MOFFATT & NICHOL
TWO HARRISON STREET
SAN FRANCISCO, CA 94105

Caltrans Metric

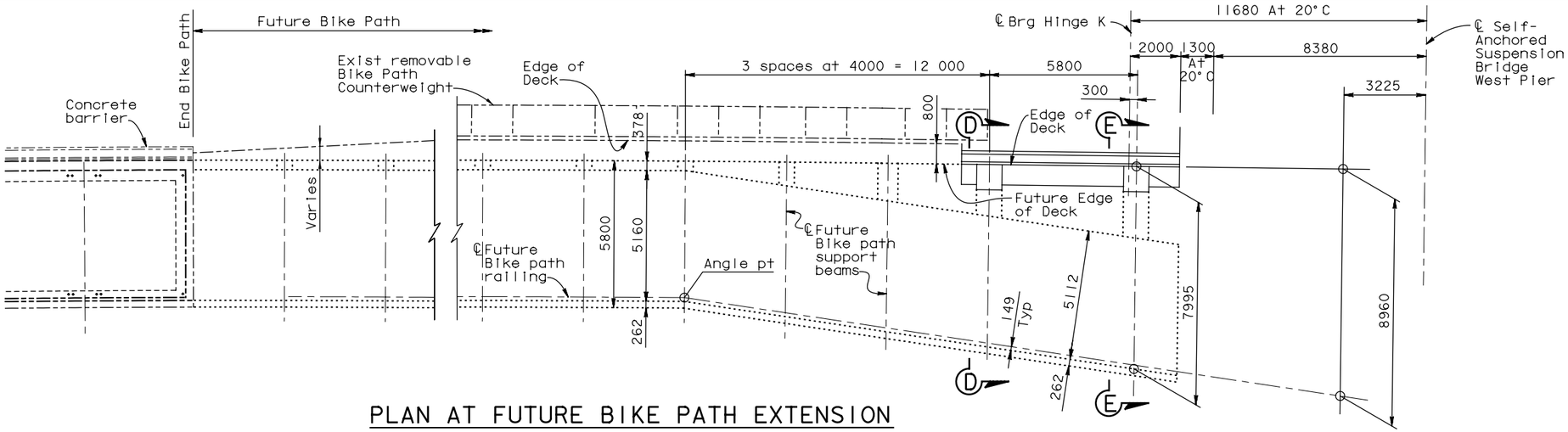

PLAN AT FUTURE BIKE PATH EXTENSION

1:100

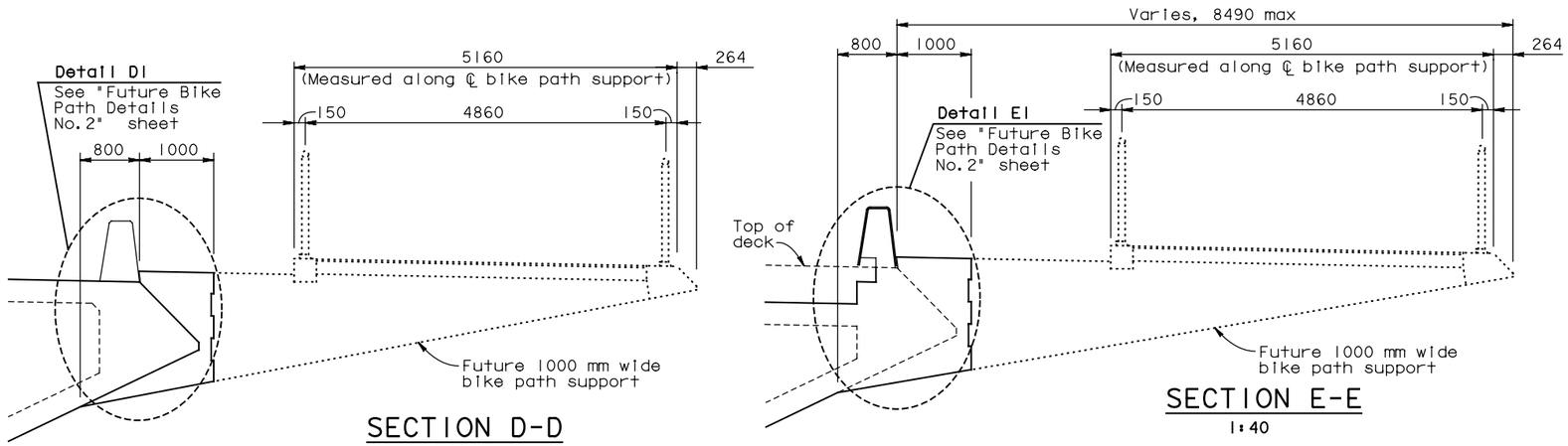

SECTION D-D

1:40

SECTION E-E

1:40

SUPPLEMENTAL SHEET

CONTRACT CHANGE ORDER NO. _____
SHEET ____ OF ____

ALL DIMENSIONS ARE IN MILLIMETERS UNLESS OTHERWISE SHOWN

SAN FRANCISCO OAKLAND BAY BRIDGE
EAST SPAN SEISMIC SAFETY PROJECT

YBI TRANSITION STRUCTURES - HINGE K

FUTURE BIKE PATH DETAILS NO. 1

DESIGN	BY Atiquilah	CHECKED Ahn
DETAILS	BY van Ryn/Zucchi/Mai	CHECKED Jain
QUANTITIES	BY Liao	CHECKED E. Nichol

DESIGN OVERSIGHT ADE AKINSANYA

SIGN OFF DATE

Rev. Date: 5-18-98

PREPARED FOR THE STATE OF CALIFORNIA DEPARTMENT OF TRANSPORTATION

Jal Birdy
PROJECT ENGINEER

BRIDGE NO. 34-0006 L/R
KILOMETER POST 12.8

ORIGINAL SCALE IN MILLIMETERS FOR REDUCED PLANS 0 10 20 30 40 50 60 70 80 90 100

CU 04
EA 0120F1

DISREGARD PRINTS BEARING EARLIER REVISION DATES

REVISION DATES (PRELIMINARY STAGE ONLY)

SHEET K159A OF 209

FILE => P:\4141-06\CADD\TS\Checked Plans\YBITS #1-100% No. 2_03-03-08 (Final Renamed)\010612 Hinge K SAS T19 CCO\04-0120f1-34-006r1-u-fbikpdt01.dgn

Jan 6, 2012

USERNAME => fsamson DATE PLOTTED => 1/5/2012 TIME PLOTTED => 5:23:51 PM

DIST.	COUNTY	ROUTE	KILOMETER POST TOTAL PROJECT	SHEET NO.	TOTAL SHEETS
04	SF	80	12.7/13.2	K710A	806

Caltrans Metric

REGISTERED ENGINEER - CIVIL

PLANS APPROVAL DATE

REGISTERED PROFESSIONAL ENGINEER A.L. ELY No. 18880 Exp. 6-30-13 CIVIL STATE OF CALIFORNIA

The State of California or its officers or agents shall not be responsible for the accuracy or completeness of electronic copies of this plan sheet.

T.Y. LIN / MOFFATT & NICHOL
TWO HARRISON STREET
SAN FRANCISCO, CA 94105

Note: For location of Details D1 & E1, see "Future Bike Path Details No. 1" sheet.

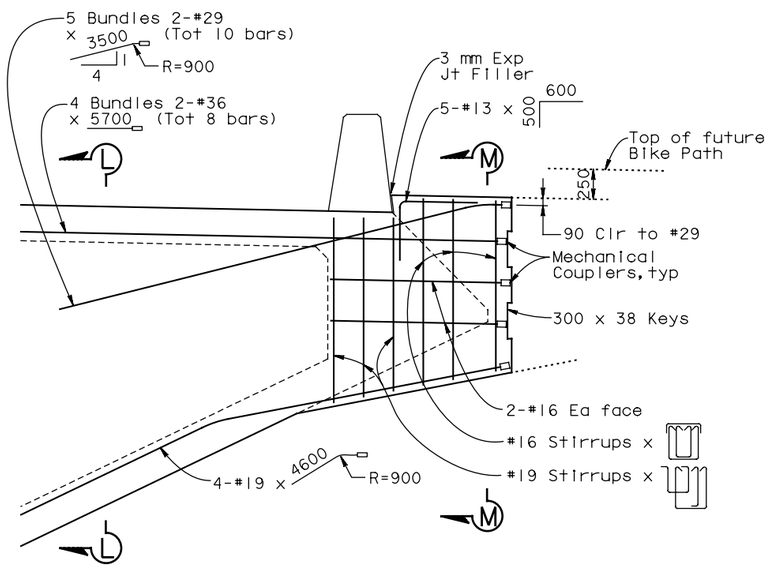

DETAIL D1
1:25

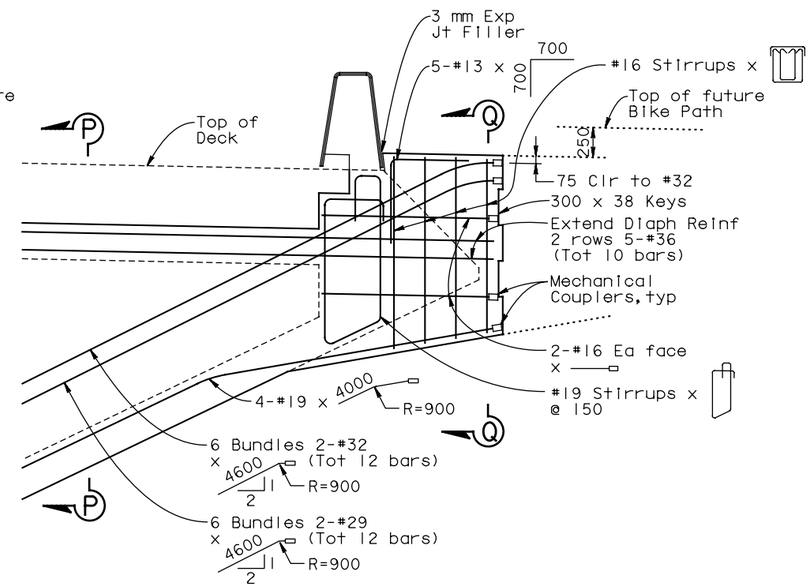

DETAIL E1
1:25

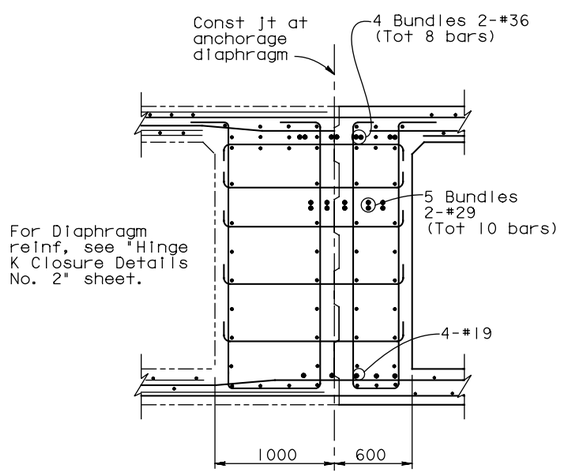

SECTION L-L
1:25

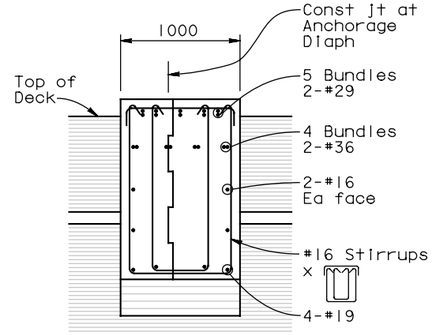

SECTION M-M
1:25

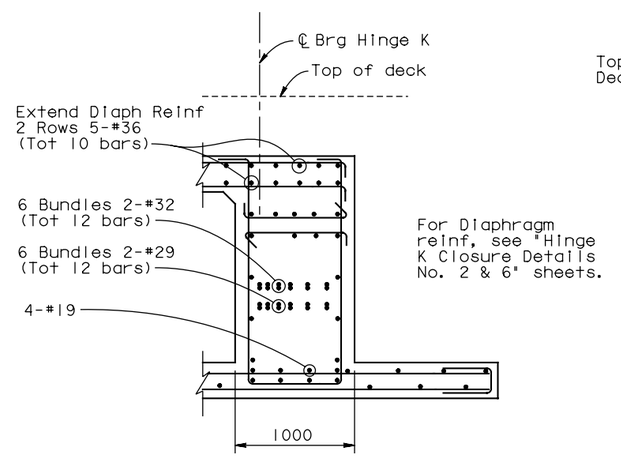

SECTION P-P
1:25

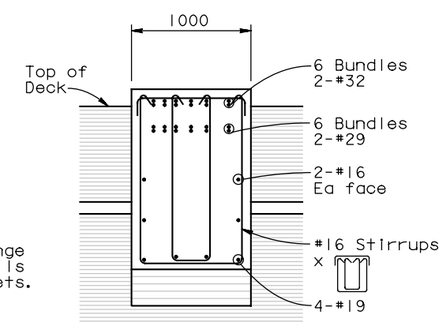

SECTION Q-Q
1:25

SUPPLEMENTAL SHEET

CONTRACT CHANGE ORDER NO. _____
SHEET ____ OF ____

ALL DIMENSIONS ARE IN MILLIMETERS UNLESS OTHERWISE SHOWN

SAN FRANCISCO OAKLAND BAY BRIDGE
EAST SPAN SEISMIC SAFETY PROJECT

YBI TRANSITION STRUCTURES - HINGE K

FUTURE BIKE PATH DETAILS NO. 2

DESIGN OVERSIGHT ADE AKINSANYA

SIGN OFF DATE

Rev. Date: 5-18-98

	BY	CHECKED
DESIGN	Atiqullah	Ahn
DETAILS	van Ryn/Zucchi/Mai	Jain
QUANTITIES	Liao	E. Nichol

PREPARED FOR THE STATE OF CALIFORNIA DEPARTMENT OF TRANSPORTATION

Jal Birdy
PROJECT ENGINEER

BRIDGE NO. 34-0006 L/R
KILOMETER POST 12.8

CU 04
EA 0120F1

ORIGINAL SCALE IN MILLIMETERS FOR REDUCED PLANS 0 10 20 30 40 50 60 70 80 90 100

DISREGARD PRINTS BEARING EARLIER REVISION DATES

REVISION DATES (PRELIMINARY STAGE ONLY)

SHEET K161A OF 209

FILE => P:\4141-06\CADD\TS\Checked Plans\YBITS #1-100% No. 2_03-03-08 (Final Renamed)\010612 Hinge K SAS T19 CCO\04-0120f1-34-006r1-u-fb1kpdt02.dgn

Jan 6, 2012

USERNAME => fsamson DATE PLOTTED => 1/5/2012 TIME PLOTTED => 5:24:01 PM

DIST.	COUNTY	ROUTE	KILOMETER POST TOTAL PROJECT	SHEET NO.	TOTAL SHEETS
04	SF	80	12.7/13.2	K715A	806

Caltrans Metric

REGISTERED ENGINEER - CIVIL

PLANS APPROVAL DATE

REGISTERED PROFESSIONAL ENGINEER A.L. ELY No. 18880 Exp. 6-30-13 CIVIL STATE OF CALIFORNIA

The State of California or its officers or agents shall not be responsible for the accuracy or completeness of electronic copies of this plan sheet.

T.Y. LIN / MOFFATT & NICHOL
TWO HARRISON STREET
SAN FRANCISCO, CA 94105

SUPPLEMENTAL SHEET

CONTRACT CHANGE ORDER NO. ___
SHEET ___ OF ___

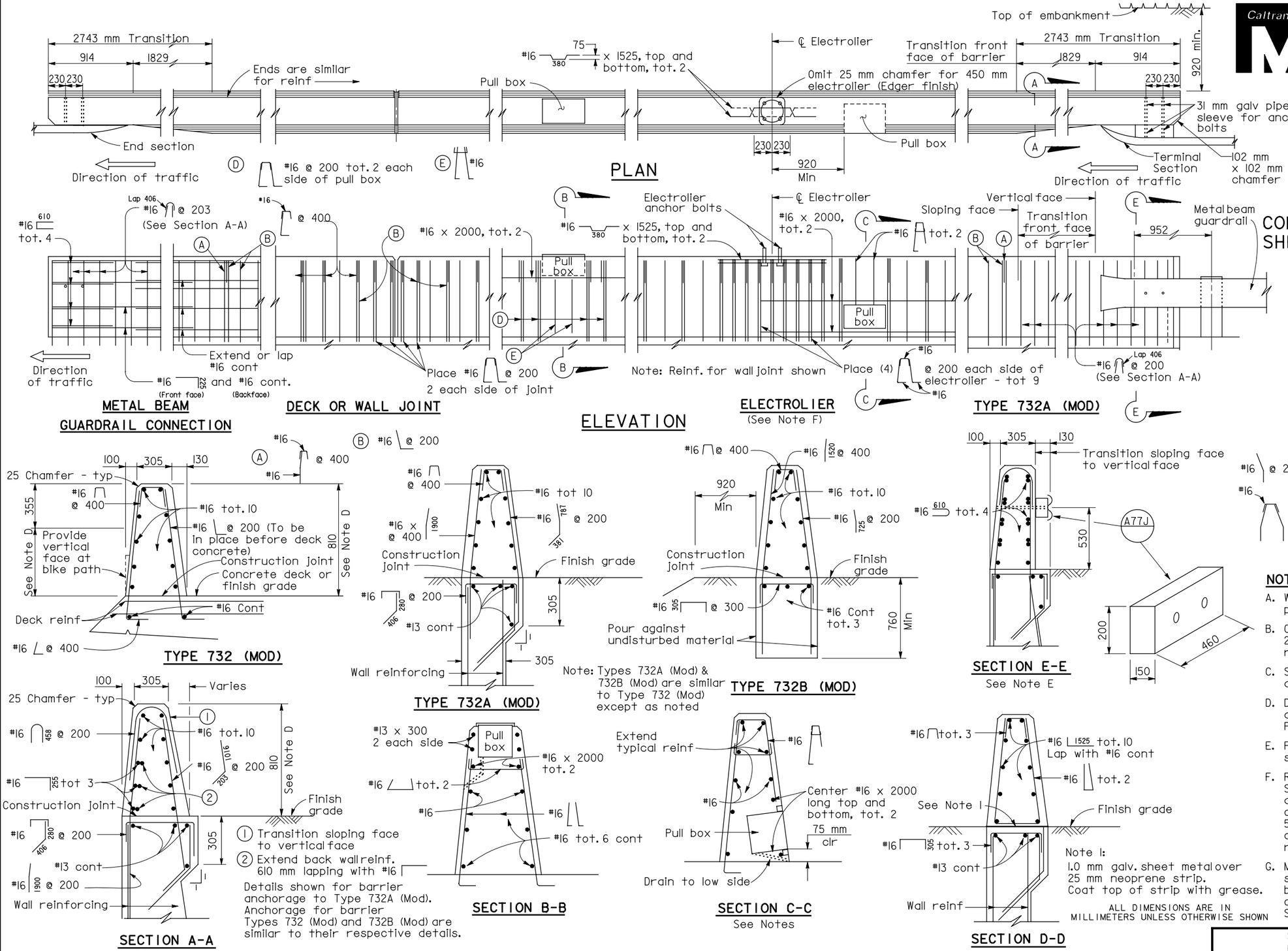

NOTES

A. Walls are to be backfilled before barrier is placed.

B. Clearance to reinforcing steel in barrier to be 25 mm, except as noted. Longitudinal reinforcement to stop at all expansion joints.

C. See project plans for locations of electroliers and pull boxes.

D. Dimensions may vary with roadway cross slope and with certain thickness of surfacing. See Project Plans.

E. For Metal Beam Guardrail Connection details not shown, see General Plan and Standard Plans.

F. Refer to Project Plans and Standard Plan Sheets ES-9A, ES-9C and ES-9D for electrical details concerning barriers. The maximum number of conduits in a barrier is limited to two (2) 50 mm conduits (max.) along with one (1) 75 mm conduit. When a 75 mm conduit is used, it is restricted to the base of barrier.

G. Minimum concrete edge distance to reinforcing shown, shall be maintained, edge distance may be adjusted to accomodate increase in concrete cover for architectural treatment. See Typical Section.

DESIGN OVERSIGHT
ADE AKINSANYA
SIGN OFF DATE
Rev. Date: 5-18-98

	BY	CHECKED
DESIGN	Desai	Jain
DETAILS	van Ryn/Zucchi/Mai	Jain
QUANTITIES	Liao	E. Nichol

PREPARED FOR THE STATE OF CALIFORNIA DEPARTMENT OF TRANSPORTATION

Jal Birdy
PROJECT ENGINEER

BRIDGE NO. 34-0006 L/R
KILOMETER POST 12.8

SAN FRANCISCO OAKLAND BAY BRIDGE
EAST SPAN SEISMIC SAFETY PROJECT

YBI TRANSITION STRUCTURES - HINGE K

CONCRETE BARRIER TYPE 732 (MOD)

ORIGINAL SCALE IN MILLIMETERS FOR REDUCED PLANS 0 10 20 30 40 50 60 70 80 90 100

CU 04
EA 0120F1

DISREGARD PRINTS BEARING EARLIER REVISION DATES

REVISION DATES (PRELIMINARY STAGE ONLY)

SHEET K166A OF 209

FILE => P:\4141-06\CADD\TS\Checked Plans\YBITS #1-100% No. 2_03-03-08 (Final Renamed)\010612 Hinge K SAS T19 CCO\04-0120f1-34-006r1-u-concbar.dgn

USERNAME => fsamson DATE PLOTTED => 1/5/2012 TIME PLOTTED => 5:23:40 PM

Jan 6, 2012