DIST.	COUNTY	ROUTE	KILOMETER POST TOTAL PROJECT	SHEET NO.	TOTAL SHEETS
04	SF	80	12.7/13.2	K710A	806

Caltrans Metric

REGISTERED ENGINEER - CIVIL
01/20/2012
PLANS APPROVAL DATE

REGISTERED PROFESSIONAL ENGINEER A.L. ELY No. 18880 Exp. 6-30-13 CIVIL STATE OF CALIFORNIA

The State of California or its officers or agents shall not be responsible for the accuracy or completeness of electronic copies of this plan sheet.

T.Y. LIN / MOFFATT & NICHOL
TWO HARRISON STREET
SAN FRANCISCO, CA 94105

Note: For location of Details D1 & E1, see "Future Bike Path Details No. 1" sheet.

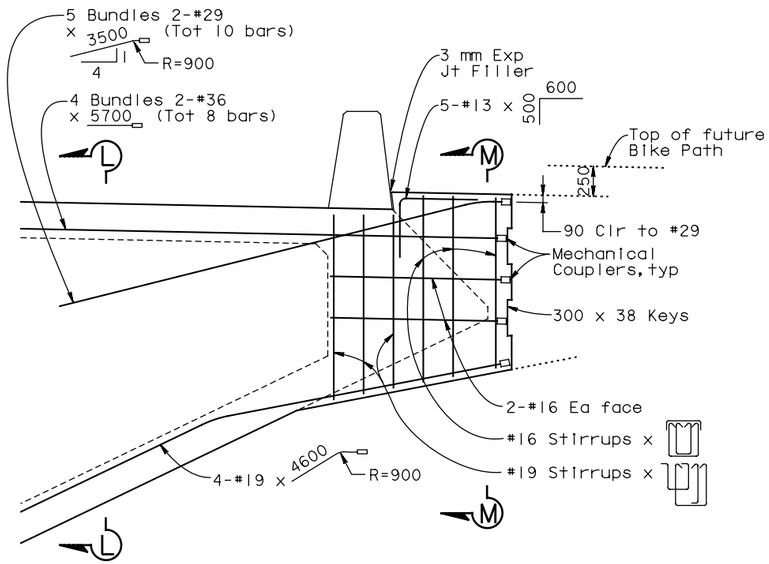

DETAIL D1
1:25

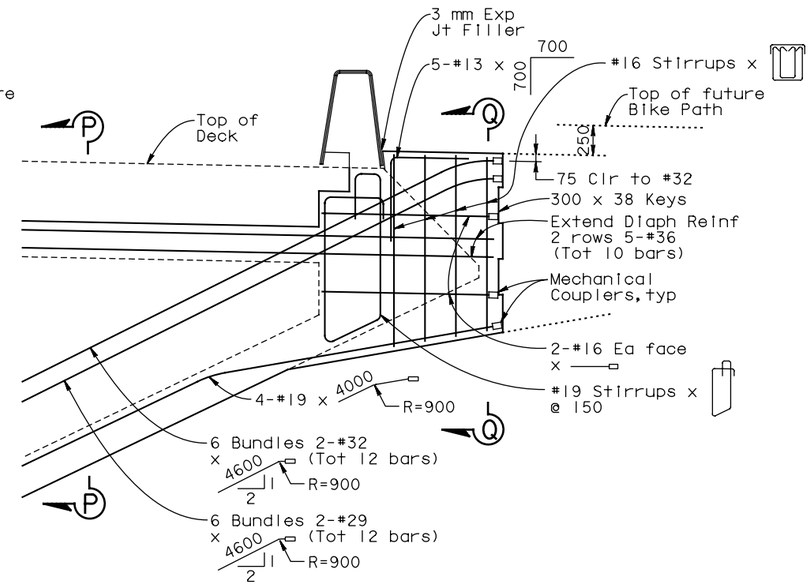

DETAIL E1
1:25

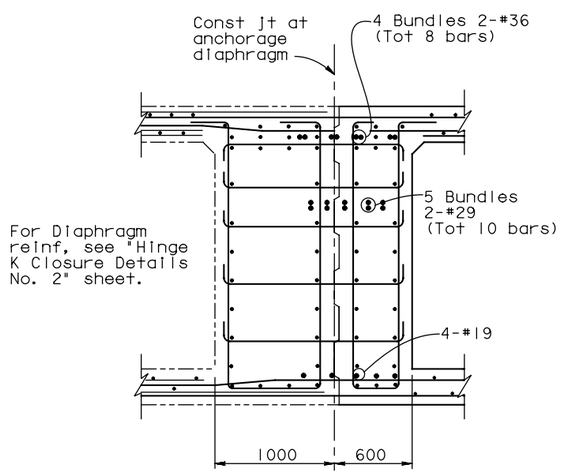

SECTION L-L
1:25

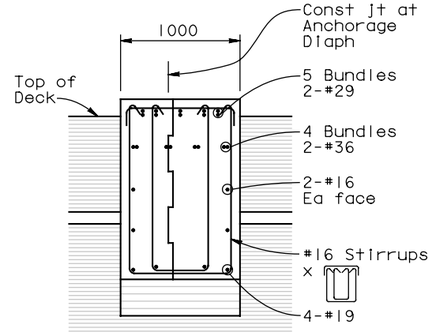

SECTION M-M
1:25

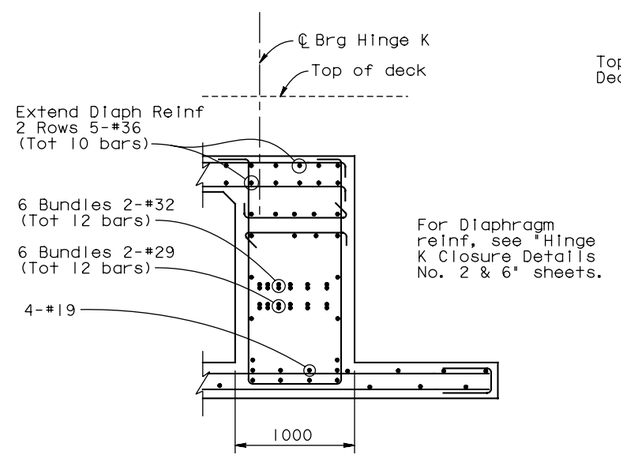

SECTION P-P
1:25

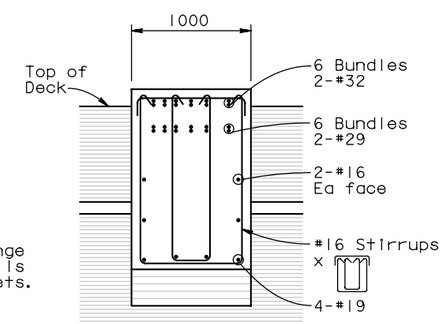

SECTION Q-Q
1:25

SUPPLEMENTAL SHEET

CONTRACT CHANGE ORDER NO. _____
SHEET ____ OF ____

ALL DIMENSIONS ARE IN MILLIMETERS UNLESS OTHERWISE SHOWN

SAN FRANCISCO OAKLAND BAY BRIDGE
EAST SPAN SEISMIC SAFETY PROJECT

YBI TRANSITION STRUCTURES - HINGE K

FUTURE BIKE PATH DETAILS NO. 2

DESIGN OVERSIGHT ADE AKINSANYA
SIGN OFF DATE

	BY	CHECKED
DESIGN	Atiqullah	Ahn
DETAILS	van Ryn/Zucchi/Mai	Jain
QUANTITIES	Liao	E. Nichol

PREPARED FOR THE STATE OF CALIFORNIA DEPARTMENT OF TRANSPORTATION

Jal Birdy
PROJECT ENGINEER

BRIDGE NO. 34-0006 L/R
KILOMETER POST 12.8

CU 04
EA 0120F1

DISREGARD PRINTS BEARING EARLIER REVISION DATES

REVISION DATES (PRELIMINARY STAGE ONLY)

SHEET K161A OF 209

Rev. Date: 5-18-98

ORIGINAL SCALE IN MILLIMETERS FOR REDUCED PLANS 0 10 20 30 40 50 60 70 80 90 100

FILE => P:\4141-06\CADD\TS\Checked Plans\YBITS #1-100% No. 2_03-03-08 (Final Renamed)\010612 Hinge K SAS T19 CCO\04-0120f1-34-006r1-u-fblkpdt02.dgn

Jan 6, 2012

USERNAME => fsamson DATE PLOTTED => 1/5/2012 TIME PLOTTED => 5:24:01 PM