DIST	COUNTY	ROUTE	KILOMETER POST TOTAL PROJECT	SHEET No	TOTAL SHEETS
04	SF	80	12.7/13.2	K700A	806

REGISTERED CIVIL ENGINEER DATE

01/20/2012

PLANS APPROVAL DATE

REGISTERED PROFESSIONAL ENGINEER Enrico G. Maggenti No. 46920 Exp. 6/30/13 CIVIL STATE OF CALIFORNIA

The State of California or its officers or agents shall not be responsible for the accuracy or completeness of electronic copies of this plan sheet.

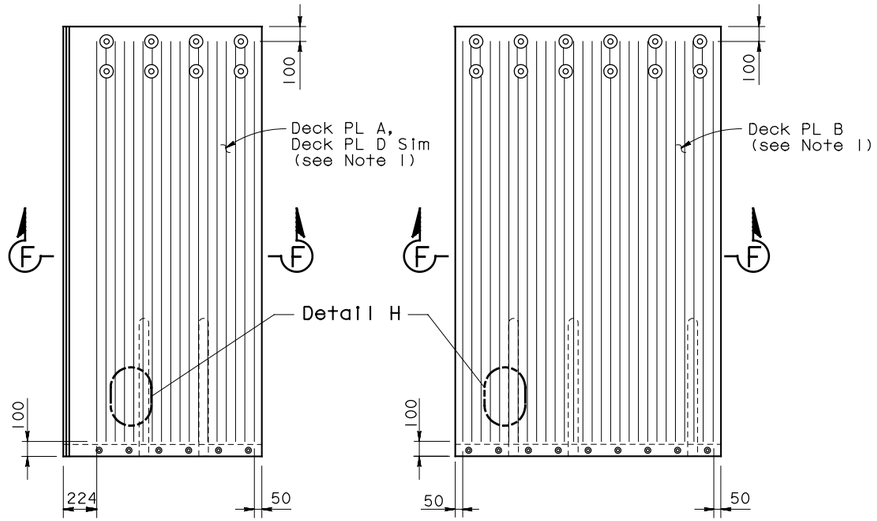

DECK PLATE A/D

(Deck PL A Shown, Deck PL D Similar)

DECK PLATE B

FRICTION PATTERN (See Note 2)

1:20

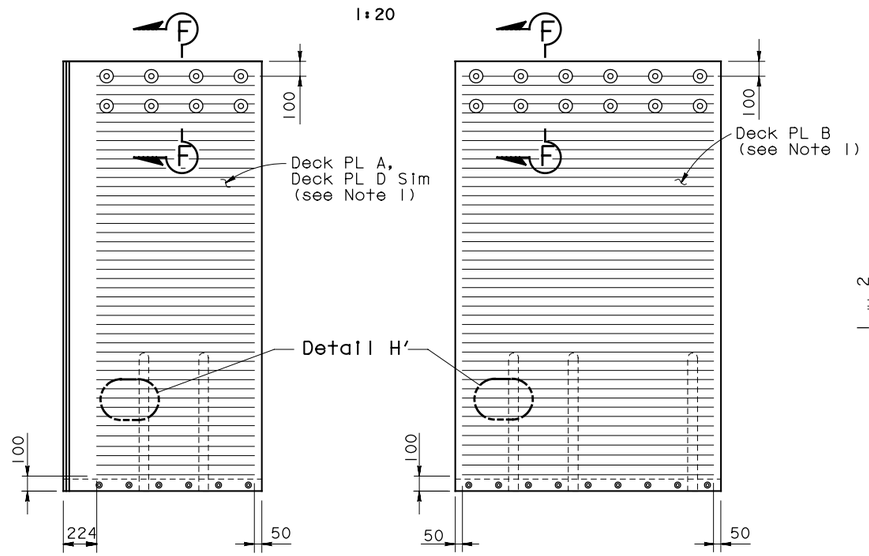

DECK PLATE A/D

(Deck PL A Shown, Deck PL D Similar)

DECK PLATE B

ALT FRICTION PATTERN (See Note 2)

1:20

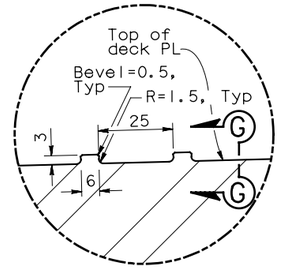

DETAIL G

1:1

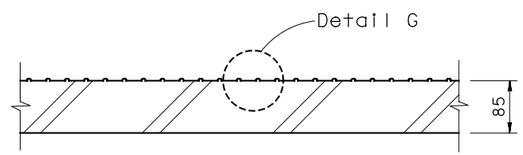

SECTION F-F

1:5

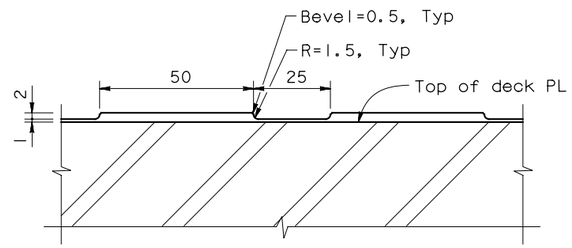

SECTION G-G

1:1

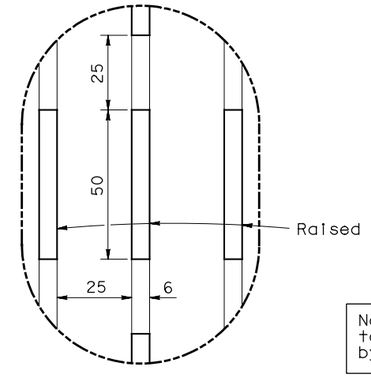

DETAIL H

1:1

Note: Hinge KE & KW Expansion Joints to be furnished by others and installed by the Contractor.

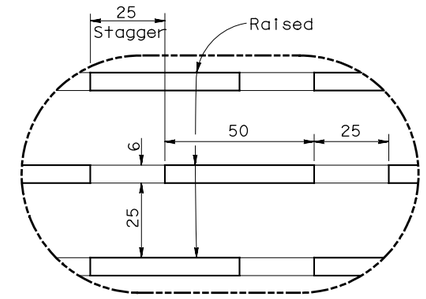

DETAIL H'

1:1

NOTES:

1. For Details not shown, see "Hinge KE & KW Expansion Joint Details No.3" sheet.
2. Friction pattern type shall be selected as directed by the Engineer. Polymer/Aggregate Skid Coat (PASC) may be applied per Engineer's direction.

SUPPLEMENTAL SHEET

CONTRACT CHANGE ORDER NO. _____
SHEET ____ OF ____

SAN FRANCISCO OAKLAND BAY BRIDGE
EAST SPAN SEISMIC SAFETY PROJECT

YBI TRANSITION STRUCTURES - HINGE K

SEISMIC JOINT (TYPE II)

HINGE KE & KW EXPANSION JOINT DETAILS NO.4

Caltrans Metric

MARK	DATE	DESCRIPTIONS	BY	CH'D	CCO#
		REVISIONS			

ALL DIMENSIONS ARE IN MILLIMETERS UNLESS OTHERWISE SHOWN

	BY	CHECKED
DESIGN	R MAGGENTI	M WHITESIDE
DETAILS	R MAGGENTI	M WHITESIDE
QUANTITIES	R MAGGENTI	M WHITESIDE

ORIGINAL SCALE IN MILLIMETERS FOR REDUCED PLANS 0 10 20 30 40 50 60 70 80 90 100

STATE OF CALIFORNIA DEPARTMENT OF TRANSPORTATION

DIVISION OF ENGINEERING SERVICES STRUCTURE DESIGN

SPECIAL DESIGNS BRANCH

CU 04
EA 0120F1

BRIDGE NO. 34-0006 L/R
KILOMETER POST 12.8

DISREGARD PRINTS BEARING EARLIER REVISION DATES

REVISION DATES

SHEET K151A OF 209

Jan 6, 2012

DATE PLOTTED => 1/12/2012
TIME PLOTTED => 41 17:57 PM

FILE => spec_des_br_proj/04-0120S1/2007sd/P:\4141-06\CADD\TS\Checked Plans\YBITS #1-100% No. 2_03-03-08 (Final Renamed)\011212 H