DIST.	COUNTY	ROUTE	KILOMETER POST TOTAL PROJECT	SHEET NO.	TOTAL SHEETS
04	SF	80	12.7/13.2	K699A	806

REGISTERED ENGINEER - CIVIL
01/20/2012
PLANS APPROVAL DATE

REGISTERED PROFESSIONAL ENGINEER Marwan N. Nader No. C 054426 Exp. 12/31/13 CIVIL STATE OF CALIFORNIA

The State of California or its officers or agents shall not be responsible for the accuracy or completeness of electronic copies of this plan sheet.

T.Y. LIN / MOFFATT & NICHOL
TWO HARRISON STREET
SAN FRANCISCO, CA 94105

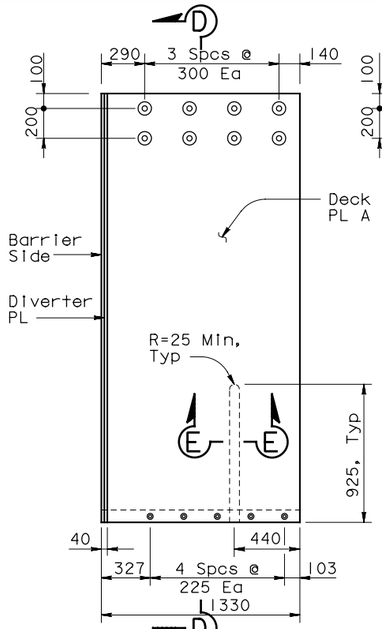

DECK PLATE A
1:20

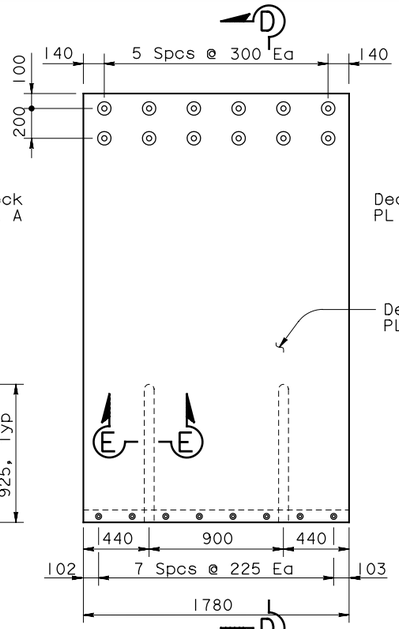

DECK PLATE B
1:20

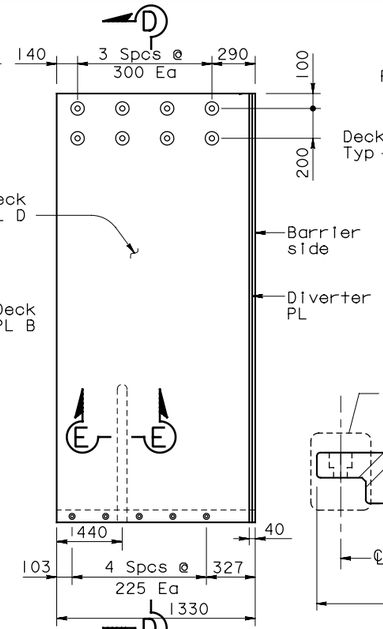

DECK PLATE D
1:20

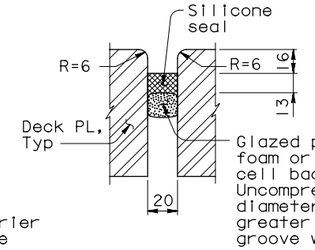

SECTION C-C
1:20

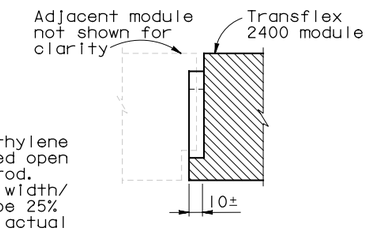

SECTION C'-C'
1:20

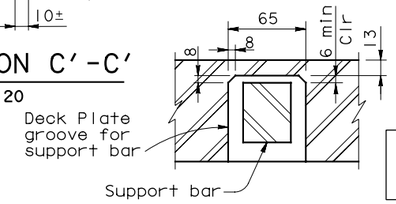

SECTION E-E
1:2.5

Note: Hinge KE & KW Expansion Joints to be furnished by others and installed by the Contractor.

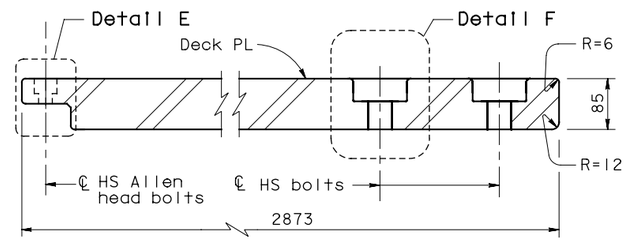

SECTION D-D
1:5

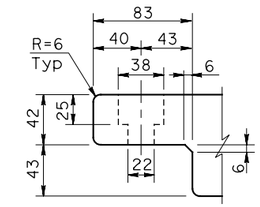

DETAIL E
1:2.5

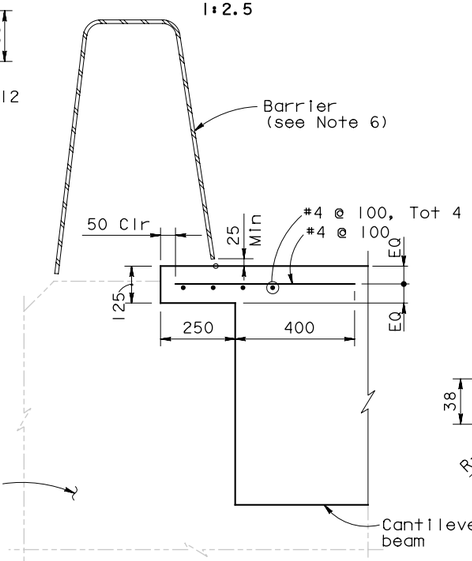

SECTION B'''-B'''
1:10

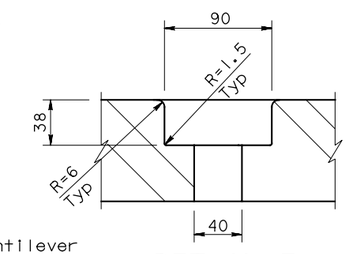

DETAIL F
1:2.5

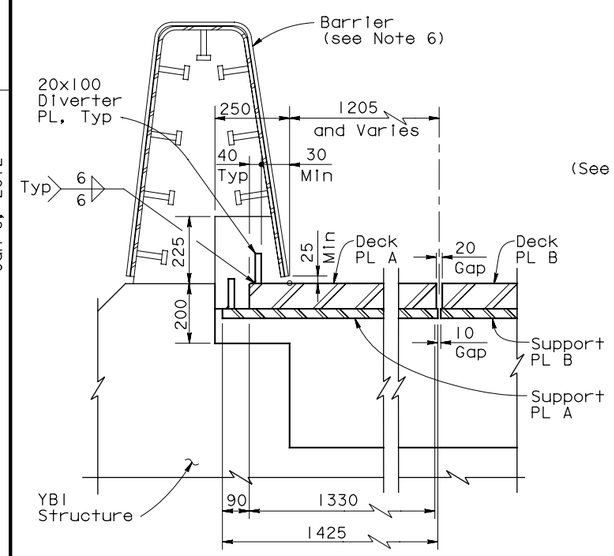

SECTION B-B
1:10

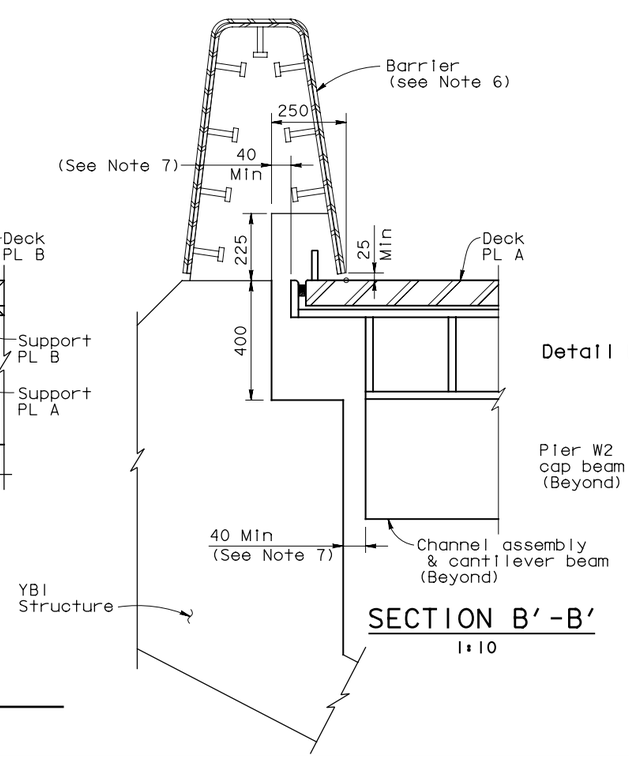

SECTION B'-B'
1:10

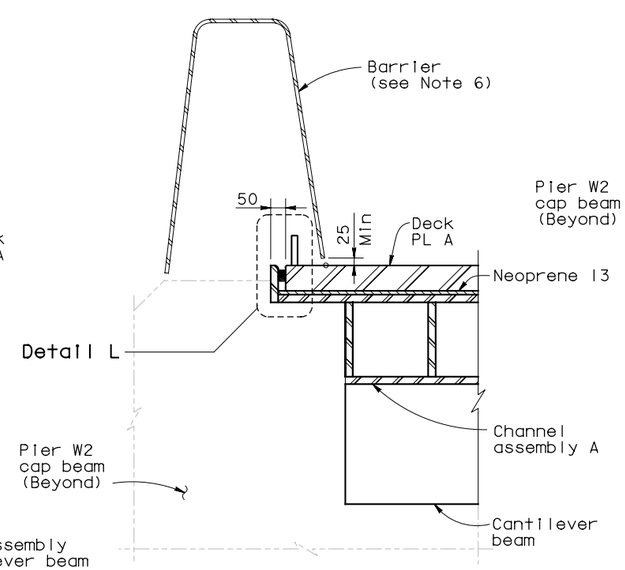

SECTION B''-B''
1:10

NOTES:

1. For deck plate plan see "Hinge KE & KW Expansion Joint Details No.1" sheet.
2. Diverter plate applies to Deck plates A and D and Support plate A only.
3. For bolting of deck plates to channel assembly details, see "Hinge KE & KW Expansion Joint Details No.6" sheet.
4. For connection detail between Trelleborg Transflex 2400 and deck plate see, "Hinge KE & KW Expansion Joint Details No.2" sheet.
5. For Detail L, see "Hinge KE & KW Expansion Joint Details No.6" sheet.
6. For barrier details, see "Hinge K Closure Details No.14" sheet.
7. Minimum clearance of 40 mm shall be provided between the cantilever at SAS blockout and interior face of YBI edge girder to ensure free seismic closing movement.

SUPPLEMENTAL SHEET

CONTRACT CHANGE ORDER NO. _____
SHEET ____ OF ____

ALL DIMENSIONS ARE IN MILLIMETERS UNLESS OTHERWISE SHOWN

SAN FRANCISCO OAKLAND BAY BRIDGE
EAST SPAN SEISMIC SAFETY PROJECT

YBI TRANSITION STRUCTURES - HINGE K

HINGE KE & KW EXPANSION JOINT DETAILS NO.3

DESIGN	BY C. Redfield	CHECKED M. Nader	
DETAILS	BY H. Patel	CHECKED J. Duxbury	
QUANTITIES	BY H. Patel	CHECKED J. Duxbury	

DESIGN OVERSIGHT
ADE AKINSANYA
SIGN OFF DATE

PREPARED FOR THE STATE OF CALIFORNIA DEPARTMENT OF TRANSPORTATION

Jal Birdy
PROJECT ENGINEER

BRIDGE NO. 34-0006 L/R
KILOMETER POST 12.8

Rev. Date: 5-18-98

ORIGINAL SCALE IN MILLIMETERS FOR REDUCED PLANS 0 10 20 30 40 50 60 70 80 90 100

CU 04
EA 0120F1

DISREGARD PRINTS BEARING EARLIER REVISION DATES

REVISION DATES (PRELIMINARY STAGE ONLY)

SHEET K150A OF 209

FILE => P:\4141-06\CADD\TS\Checked Plans\YBITS #1-100% No. 2_03-03-08 (Final Renamed)\011212 Hinge K SAS T19 CCO\TYLin sheets\04-01

Jan 6, 2012

TIME PLOTTED => 4:17:48 PM

DATE PLOTTED => 1/12/2012

USERNAME => fsamson