DIST.	COUNTY	ROUTE	KILOMETER POST TOTAL PROJECT	SHEET NO.	TOTAL SHEETS
04	SF	80	12.7/13.2	K679A	806

REGISTERED ENGINEER - CIVIL
01/20/2012
PLANS APPROVAL DATE
REGISTERED PROFESSIONAL ENGINEER A.L. ELY No. 18880 Exp. 6-30-13 CIVIL STATE OF CALIFORNIA
The State of California or its officers or agents shall not be responsible for the accuracy or completeness of electronic copies of this plan sheet.

T.Y. LIN / MOFFATT & NICHOL
TWO HARRISON STREET
SAN FRANCISCO, CA 94105

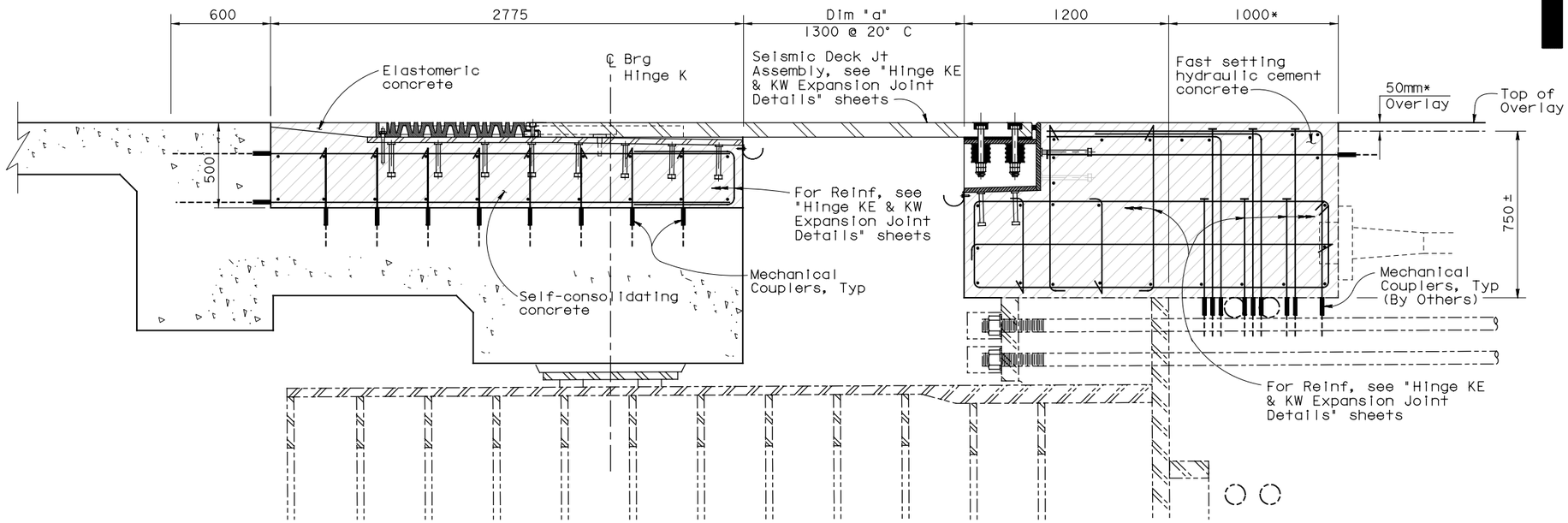

TYPICAL SECTION AT EXPANSION JOINT

1:15

Expansion Joint Information Movement Rating (MR): 280 mm	
Air Temperature (T)	Dimension "a" (mm)
5° C	1350
10° C	1333
15° C	1317
20° C	1300
25° C	1284
30° C	1267
35° C	1251

Indicates concrete placed when deck joint installed

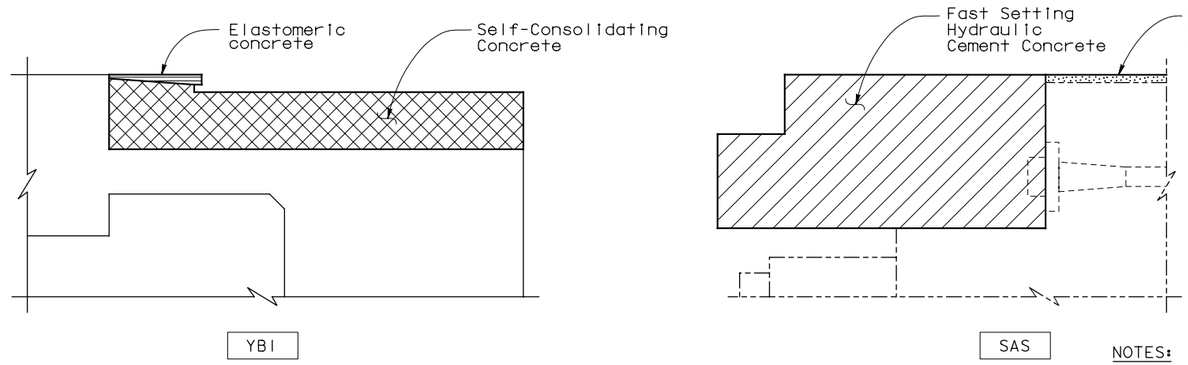

Fast Setting Hydraulic Cement Concrete (FSHCC) (f'_{ci} = 14 MPa @ 3 hours, f'_c = 35 MPa @ 56 days)

Self-Consolidating Concrete (SCC) Bridge (f'_c = 35 MPa @ 56 days)

Overlay

Elastomeric Concrete (see Note 1)

CONCRETE STRENGTH AND TYPE LIMITS

NOTES:

1. At the Contractor's option, Watson Bowman's WaboCrete II Elastomeric Concrete may be used, subject to review and approval of the Engineer.

SUPPLEMENTAL SHEET

CONTRACT CHANGE ORDER NO. _____
SHEET ____ OF ____

ALL DIMENSIONS ARE IN MILLIMETERS UNLESS OTHERWISE SHOWN

SAN FRANCISCO OAKLAND BAY BRIDGE
EAST SPAN SEISMIC SAFETY PROJECT

YBI TRANSITION STRUCTURES - HINGE K

HINGE K CLOSURE DETAILS NO. 13

DESIGN OVERSIGHT ADE AKINSANYA
SIGN OFF DATE

	BY	CHECKED
DESIGN	Lee	Wang
DETAILS	van Ryn/Zucchi/Mai	Jain
QUANTITIES	Liao	E. Nichol

PREPARED FOR THE STATE OF CALIFORNIA DEPARTMENT OF TRANSPORTATION

Jai Birdy
PROJECT ENGINEER

BRIDGE NO. 34-0006L/R
KILOMETER POST 12.8

Rev. Date: 5-18-98

ORIGINAL SCALE IN MILLIMETERS FOR REDUCED PLANS 0 10 20 30 40 50 60 70 80 90 100

CU 04
EA 0120F1

DISREGARD PRINTS BEARING EARLIER REVISION DATES

REVISION DATES (PRELIMINARY STAGE ONLY)

SHEET K130A OF 209

FILE => P:\4141-06\CADD\TS\Checked Plans\YBITS #1-100% No. 2_03-03-08 (Final Renamed)\010612 Hinge K SAS T19 CCO\04-0120f1-34-006r

Jan 6, 2012

TIME PLOTTED => 5:21:29 PM
DATE PLOTTED => 1/5/2012
USERNAME => fsamson