DIST.	COUNTY	ROUTE	KILOMETER POST TOTAL PROJECT	SHEET NO.	TOTAL SHEETS
04	SF	80	12.7/13.2	K673AA	806

Caltrans Metric

REGISTERED ENGINEER - CIVIL
01/20/2012
PLANS APPROVAL DATE

REGISTERED PROFESSIONAL ENGINEER A.L. ELY No. 18880 Exp. 6-30-13 CIVIL STATE OF CALIFORNIA

The State of California or its officers or agents shall not be responsible for the accuracy or completeness of electronic copies of this plan sheet.

T.Y. LIN / MOFFATT & NICHOL
TWO HARRISON STREET
SAN FRANCISCO, CA 94105

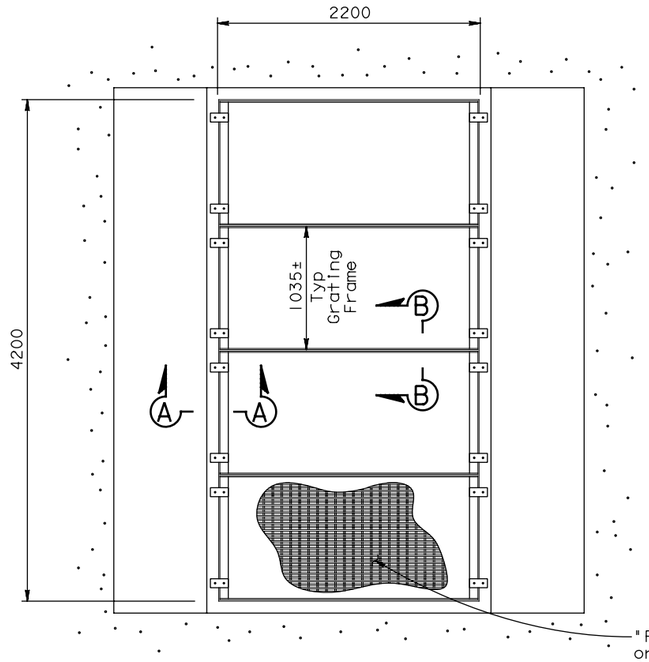

PLAN AT SOFFIT OPENING
1:25

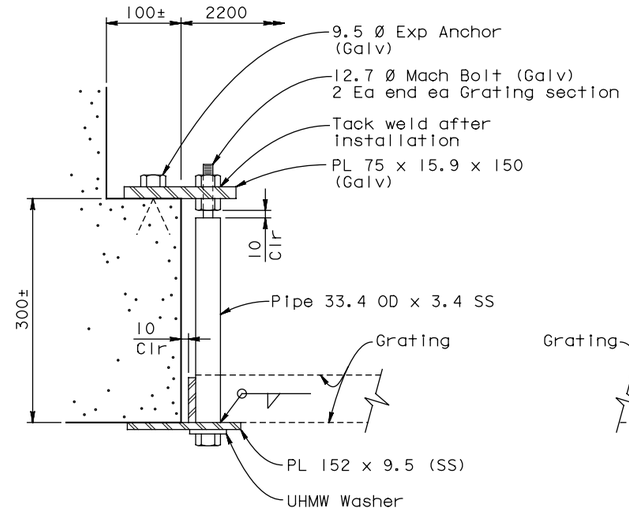

SECTION A-A
1:4

Grating Design (Service) Loads:

Live Load - 4788 Pa
Wind (Uplift) - 3830 Pa

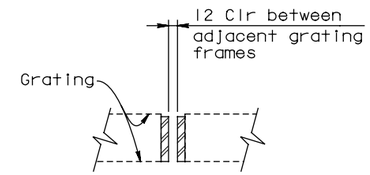

SECTION B-B
1:4

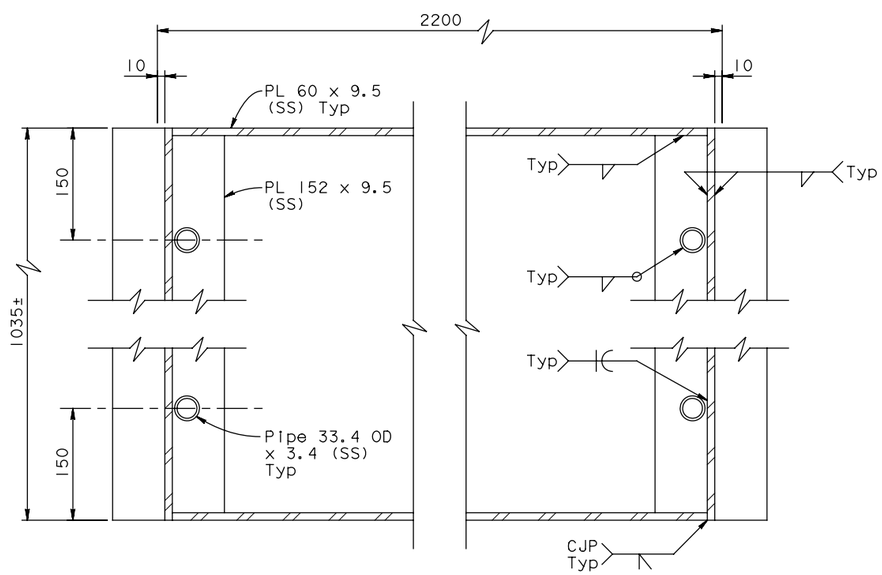

PLAN - GRATING FRAME
1:4

Note: Welding to stainless steel shall be in accordance with AWS D1.6-1999.

ALL DIMENSIONS ARE IN MILLIMETERS UNLESS OTHERWISE SHOWN

SUPPLEMENTAL SHEET

CONTRACT CHANGE ORDER NO. _____
SHEET ____ OF ____

SAN FRANCISCO OAKLAND BAY BRIDGE
EAST SPAN SEISMIC SAFETY PROJECT

YBI TRANSITION STRUCTURES - HINGE K

HINGE K CLOSURE DETAILS NO. 7A

DESIGN OVERSIGHT
ADE AKINSANYA
SIGN OFF DATE

	BY	CHECKED
DESIGN	Lee	Birdy
DETAILS	Samson	Ely
QUANTITIES	Fellows	Birdy

PREPARED FOR THE STATE OF CALIFORNIA DEPARTMENT OF TRANSPORTATION

Jal Birdy
PROJECT ENGINEER

BRIDGE NO. 34-0006 L/R
KILOMETER POST 12.8

CU 04
EA 0120F1

DISREGARD PRINTS BEARING EARLIER REVISION DATES

REVISION DATES (PRELIMINARY STAGE ONLY)

SHEET K124AA OF 209

Rev. Date: 5-18-98

ORIGINAL SCALE IN MILLIMETERS FOR REDUCED PLANS 0 10 20 30 40 50 60 70 80 90 100

FILE => P:\4141-06\CADD\TS\Checked Plans\YBITS #1-100% No. 2_03-03-08 (Final Renamed)\010612 Hinge K SAS T19 CCO\04-0120f1-34-006r1-n-hingedt07a.dgn

Jan 6, 2012

USERNAME => fsamson DATE PLOTTED => 1/5/2012 TIME PLOTTED => 5:20:33 PM