DIST.	COUNTY	ROUTE	KILOMETER POST TOTAL PROJECT	SHEET NO.	TOTAL SHEETS
04	SF	80	12.7/13.2	K673A	806

Caltrans Metric

REGISTERED ENGINEER - CIVIL
01/20/2012
PLANS APPROVAL DATE

REGISTERED PROFESSIONAL ENGINEER A.L. ELY No. 18880 Exp. 6-30-13 CIVIL STATE OF CALIFORNIA

The State of California or its officers or agents shall not be responsible for the accuracy or completeness of electronic copies of this plan sheet.

T.Y. LIN / MOFFATT & NICHOL
TWO HARRISON STREET
SAN FRANCISCO, CA 94105

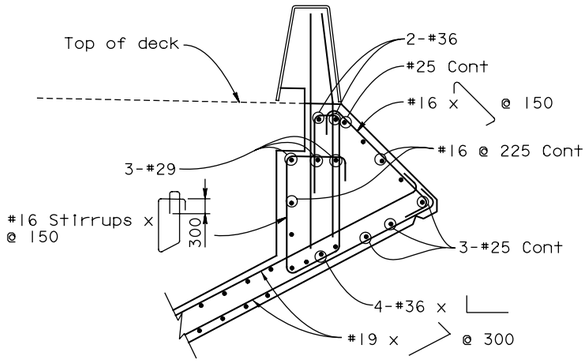

EDGE OF DECK DETAIL EAST OF HINGE K BEARING DIAPHRAGM

1:25

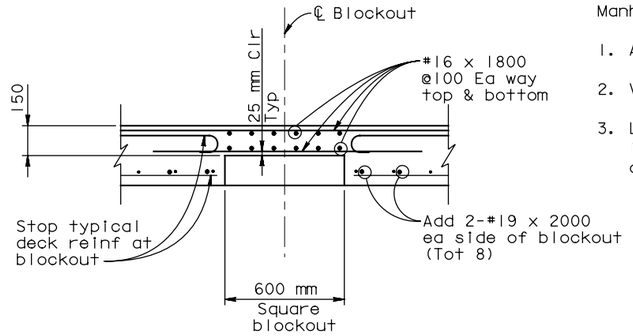

PARTIAL DEPTH DECK BLOCKOUT DETAIL

(For location see "Hinge K Closure Details No.1" sheet)

1:15

Manhole Ladder Notes:

1. All metal, including fasteners, shall be galvanized.
2. Verify all dimensions in the field prior to fabrication.
3. Ladders shall be provided for all deck access openings. In Westbound and Eastbound structures at Hinge K closure.

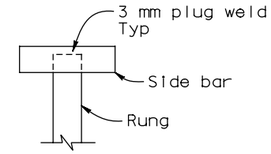

DETAIL 1

1:2

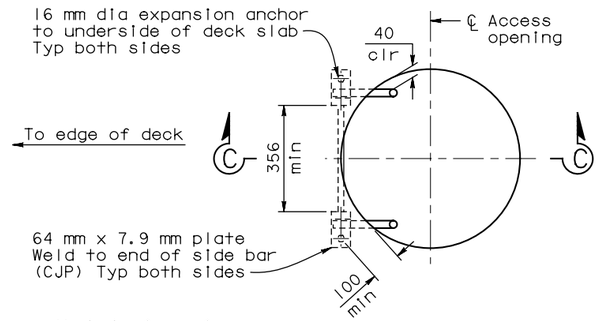

PLAN

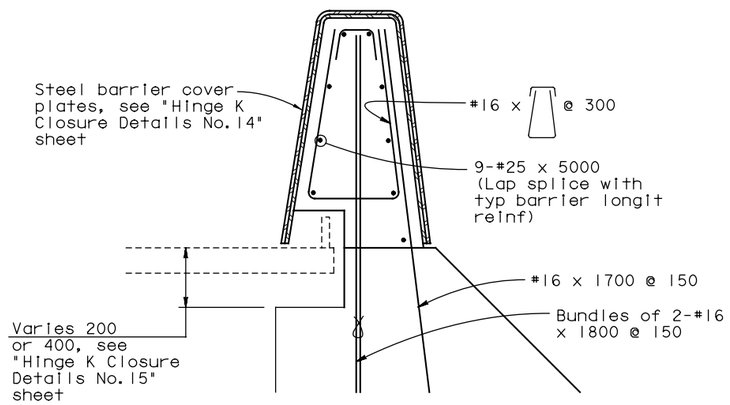

BARRIER DETAIL AT BLOCKOUT FOR EXPANSION JOINT ASSEMBLY

1:10

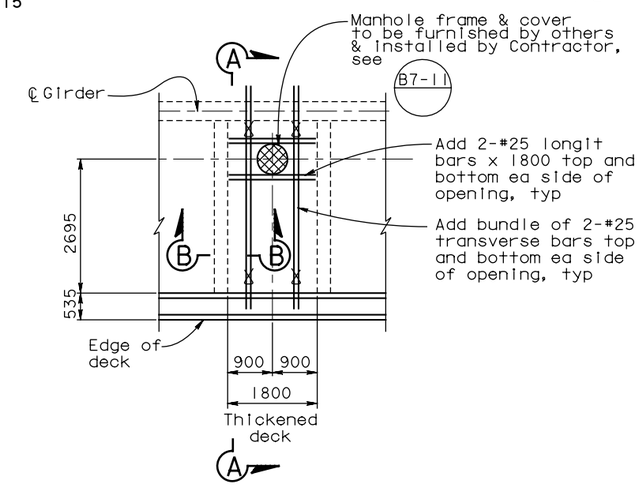

PLAN AT DECK ACCESS MANHOLES

(4 Req'd)

1:60

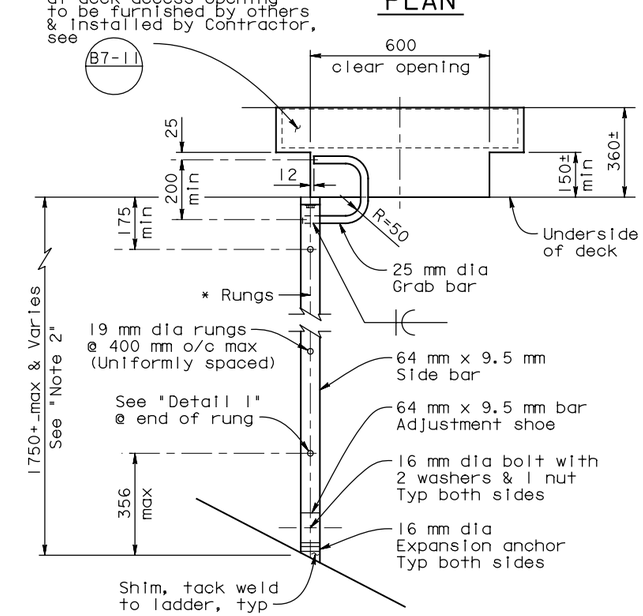

SECTION C-C

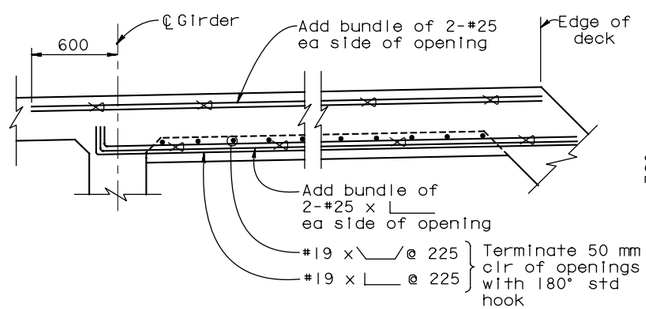

SECTION A-A

NO SCALE

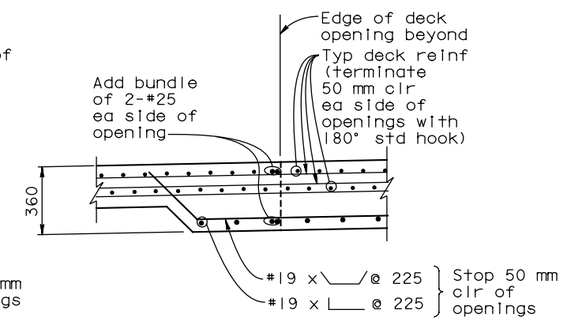

SECTION B-B

NO SCALE

TYPICAL LADDER DETAILS AT DECK ACCESS OPENINGS

1:10

SUPPLEMENTAL SHEET

CONTRACT CHANGE ORDER NO. _____
SHEET ____ OF ____

ALL DIMENSIONS ARE IN MILLIMETERS UNLESS OTHERWISE SHOWN

DESIGN	BY Lee	CHECKED Wang	
DETAILS	BY van Ryn/Zucchi/Mai	CHECKED Jain	
QUANTITIES	BY Liao	CHECKED E. Nichol	

DESIGN OVERSIGHT ADE AKINSANYA
SIGN OFF DATE
Rev. Date: 5-18-98

PREPARED FOR THE STATE OF CALIFORNIA DEPARTMENT OF TRANSPORTATION

Jal Birdy
PROJECT ENGINEER

BRIDGE NO. 34-0006 L/R
KILOMETER POST 12.8

SAN FRANCISCO OAKLAND BAY BRIDGE
EAST SPAN SEISMIC SAFETY PROJECT

YBI TRANSITION STRUCTURES - HINGE K

HINGE K CLOSURE DETAILS NO.7

ORIGINAL SCALE IN MILLIMETERS FOR REDUCED PLANS 0 10 20 30 40 50 60 70 80 90 100

CU 04
EA 0120F1

DISREGARD PRINTS BEARING EARLIER REVISION DATES

REVISION DATES (PRELIMINARY STAGE ONLY)

SHEET K124A OF 209