DIST.	COUNTY	ROUTE	KILOMETER POST TOTAL PROJECT	SHEET NO.	TOTAL SHEETS
04	SF	80	12.7/13.2	K671A	806

Caltrans Metric

REGISTERED ENGINEER - CIVIL
01/20/2012
PLANS APPROVAL DATE

REGISTERED PROFESSIONAL ENGINEER A.L. ELY No. 18880 Exp. 6-30-13 CIVIL STATE OF CALIFORNIA

The State of California or its officers or agents shall not be responsible for the accuracy or completeness of electronic copies of this plan sheet.

T.Y. LIN / MOFFATT & NICHOL
TWO HARRISON STREET
SAN FRANCISCO, CA 94105

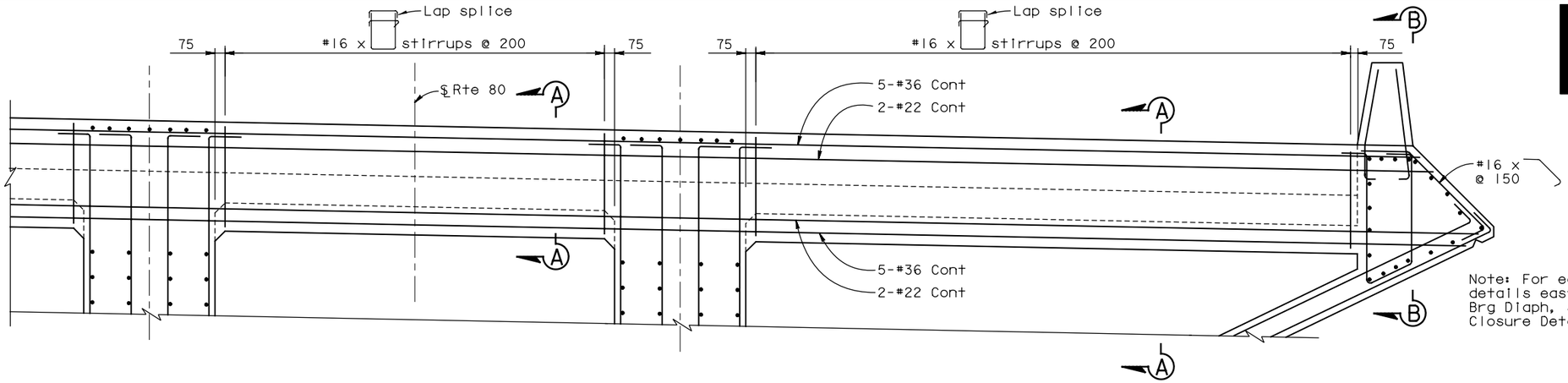

Note: For edge of deck details east of Hinge K Brg Diaph, see "Hinge K Closure Details No.7" sheet.

PARTIAL ELEVATION EDGE BEAM ADJACENT TO EXPANSION JOINT ASSEMBLY BLOCKOUT

1:25

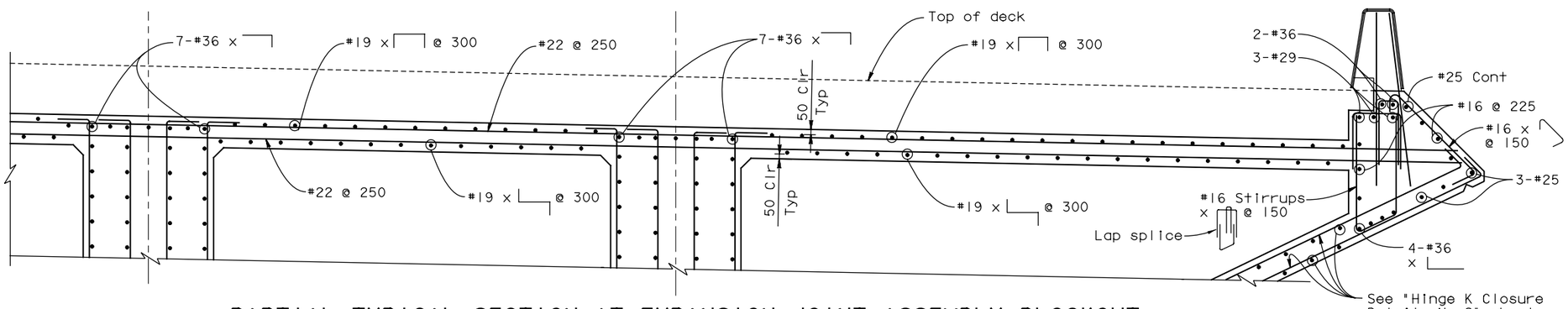

Note: For reinf at blockout for deck exp joint assembly, see "Hinge KE & KW Expansion Joint Details" sheet.

PARTIAL TYPICAL SECTION AT EXPANSION JOINT ASSEMBLY BLOCKOUT

1:25

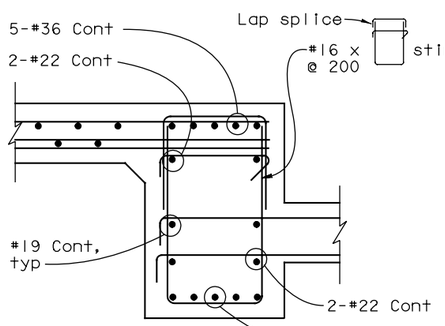

SECTION A-A

1:15

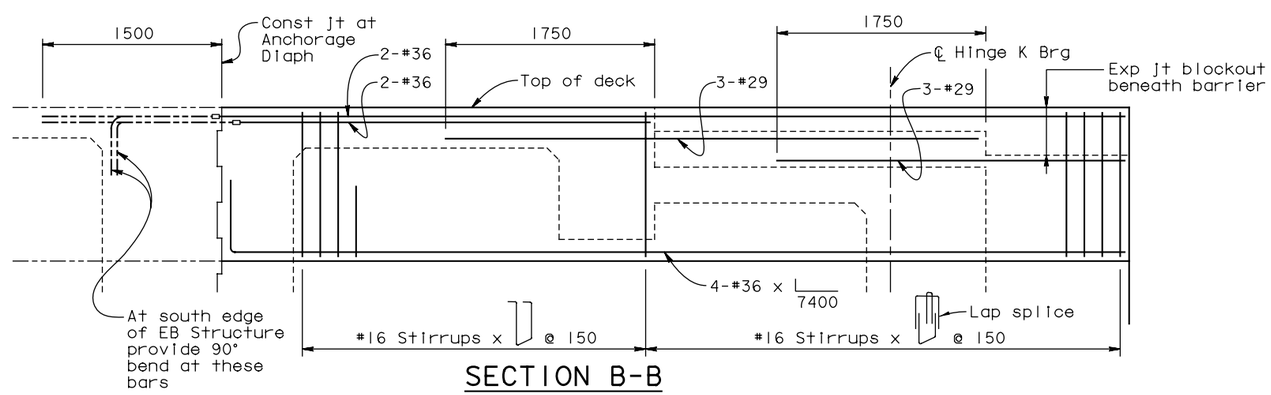

SECTION B-B

1:25

SUPPLEMENTAL SHEET

CONTRACT CHANGE ORDER NO. _____
SHEET ____ OF ____

ALL DIMENSIONS ARE IN MILLIMETERS UNLESS OTHERWISE SHOWN

SAN FRANCISCO OAKLAND BAY BRIDGE
EAST SPAN SEISMIC SAFETY PROJECT

YBI TRANSITION STRUCTURES - HINGE K

HINGE K CLOSURE DETAILS NO.5

DESIGN OVERSIGHT ADE AKINSANYA
SIGN OFF DATE
Rev. Date: 5-18-98

	BY	CHECKED
DESIGN	Lee	Wang
DETAILS	van Ryn/Zucchi/Mai	Jain
QUANTITIES	Liao	E. Nichol

PREPARED FOR THE STATE OF CALIFORNIA DEPARTMENT OF TRANSPORTATION

Jal Birdy
PROJECT ENGINEER

BRIDGE NO. 34-0006 L/R
KILOMETER POST 12.8

ORIGINAL SCALE IN MILLIMETERS FOR REDUCED PLANS 0 10 20 30 40 50 60 70 80 90 100

CU 04
EA 0120F1

DISREGARD PRINTS BEARING EARLIER REVISION DATES

REVISION DATES (PRELIMINARY STAGE ONLY)

SHEET K122A OF 209

Jan 6, 2012

USERNAME => fsamson DATE PLOTTED => 1/5/2012 TIME PLOTTED => 5:20:05 PM

FILE => P:\4141-06\CADD\TS\Checked Plans\YBITS #1-100% No. 2_03-03-08 (Final Renamed)\010612 Hinge K SAS T19 CCO\04-0120f1-34-006r1-n-hingedt05.dgn