DIST.	COUNTY	ROUTE	KILOMETER POST TOTAL PROJECT	SHEET NO.	TOTAL SHEETS
04	SF	80	12.7/13.2	K550A	806

Caltrans Metric

REGISTERED ENGINEER - CIVIL
01/20/2012
PLANS APPROVAL DATE

REGISTERED PROFESSIONAL ENGINEER A.L. ELY No. 18880 Exp. 6-30-13 CIVIL STATE OF CALIFORNIA

The State of California or its officers or agents shall not be responsible for the accuracy or completeness of electronic copies of this plan sheet.

T.Y. LIN / MOFFATT & NICHOL
TWO HARRISON STREET
SAN FRANCISCO, CA 94105

1166 of 1204

SUPPLEMENTAL SHEET

CONTRACT CHANGE ORDER NO. ____
SHEET ___ OF ___

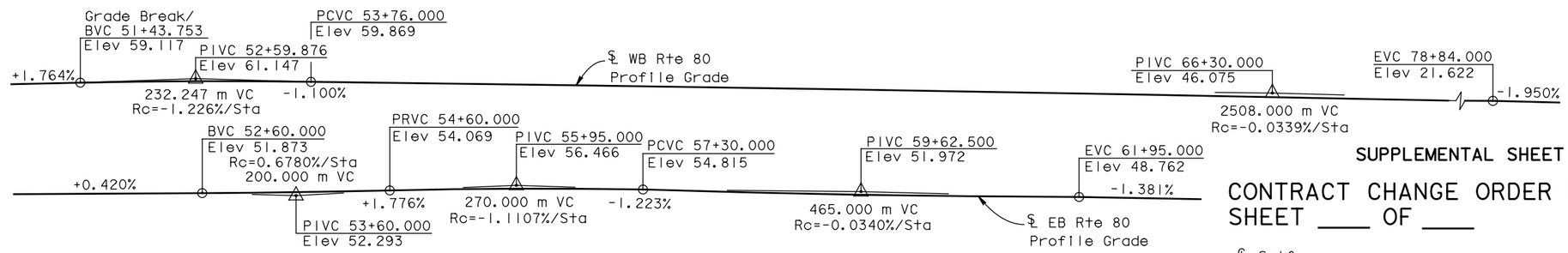

PROFILE GRADE
NO SCALE

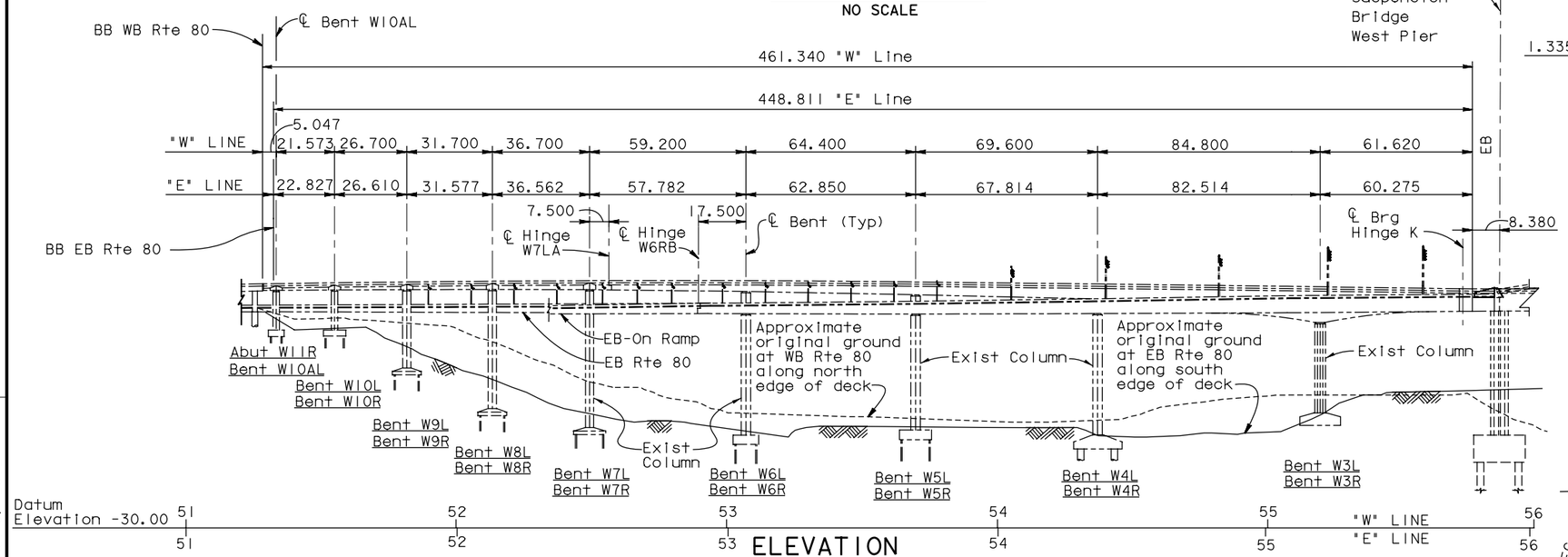

ELEVATION
1:1000

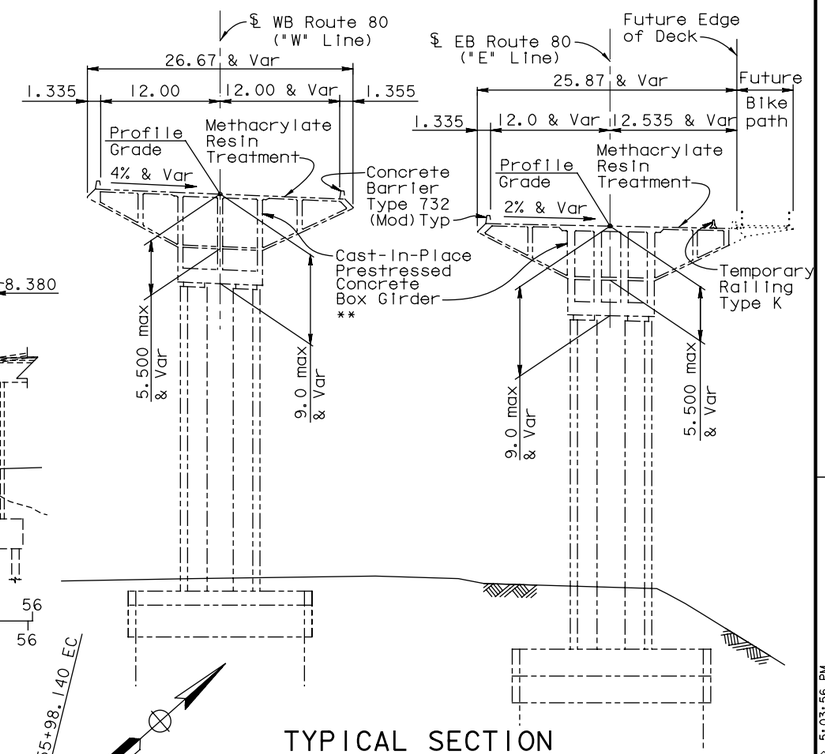

TYPICAL SECTION
(Bent W3L & W3R Shown)
1:300

** Note WB Superstructure is a Cast-in-Place conventionally reinforced concrete box girder from Bent W10AL to Hinge W7LA

Notes:
For approximate bridge quantities see "Foundation Plan" sheet.
For index to Bridge Plans see "Structure Plan" sheet.

-------- Indicates existing structures.

Standard Plan Sheet No.
Detail No.

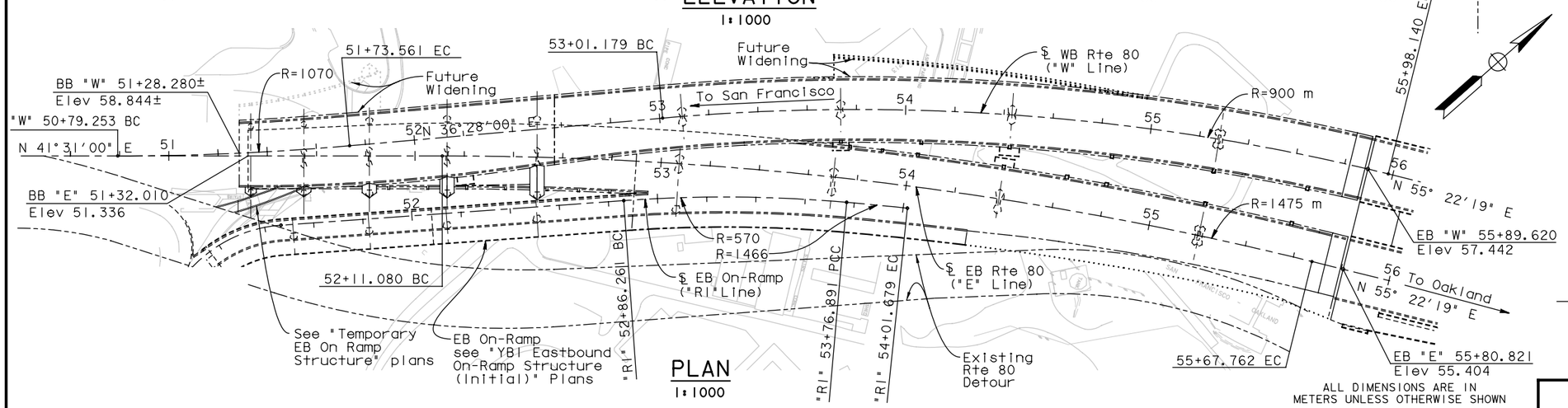

PLAN
1:1000

ALL DIMENSIONS ARE IN METERS UNLESS OTHERWISE SHOWN

SAN FRANCISCO OAKLAND BAY BRIDGE
EAST SPAN SEISMIC SAFETY PROJECT

YBI TRANSITION STRUCTURES - HINGE K

GENERAL PLAN

DESIGN OVERSIGHT ADE AKINSANYA	DESIGN	BY Desai	CHECKED Jain	LOAD FACTOR DESIGN	LIVE LOADING: HS20-44 AND ALTERNATIVE AND PERMIT DESIGN LOAD		
SIGN OFF DATE	DETAILS	BY van Ryn/Zucchi/Mai	CHECKED Jain	LAYOUT	BY Desai	CHECKED Alcaraz	
Rev. Date: 5-18-98	QUANTITIES	BY Liao	CHECKED E. Nichol	SPECIFICATIONS	BY J. Ely	PLANS AND SPECS COMPARED Jain	

PREPARED FOR THE STATE OF CALIFORNIA DEPARTMENT OF TRANSPORTATION

Jal Birdy
PROJECT ENGINEER

BRIDGE NO. 34-0006 L/R
KILOMETER POST 12.8

CU 04
EA 0120F1

ORIGINAL SCALE IN MILLIMETERS FOR REDUCED PLANS 0 10 20 30 40 50 60 70 80 90 100

DISREGARD PRINTS BEARING EARLIER REVISION DATES

REVISION DATES (PRELIMINARY STAGE ONLY)

SHEET K1A OF 209

FILE => P:\4141-06\CADD\TS\Checked Plans\YBITS #1-100% No. 2_03-03-08 (Final Renamed)\010612 Hinge K SAS T19 CCO\04-0120f1-34-006r1-a-gp01.dgn

USERNAME => fsamson DATE PLOTTED => 1/5/2012 TIME PLOTTED => 5:03:56 PM

Jan 6, 2012

DIST.	COUNTY	ROUTE	KILOMETER POST TOTAL PROJECT	SHEET NO.	TOTAL SHEETS
04	SF	80	12.7/13.2	K554A	806

Caltrans Metric

REGISTERED ENGINEER - CIVIL
01/20/2012
PLANS APPROVAL DATE

REGISTERED PROFESSIONAL ENGINEER A.L. ELY No. 18880 Exp. 6-30-13 CIVIL STATE OF CALIFORNIA

The State of California or its officers or agents shall not be responsible for the accuracy or completeness of electronic copies of this plan sheet.

T.Y. LIN / MOFFATT & NICHOL
TWO HARRISON STREET
SAN FRANCISCO, CA 94105

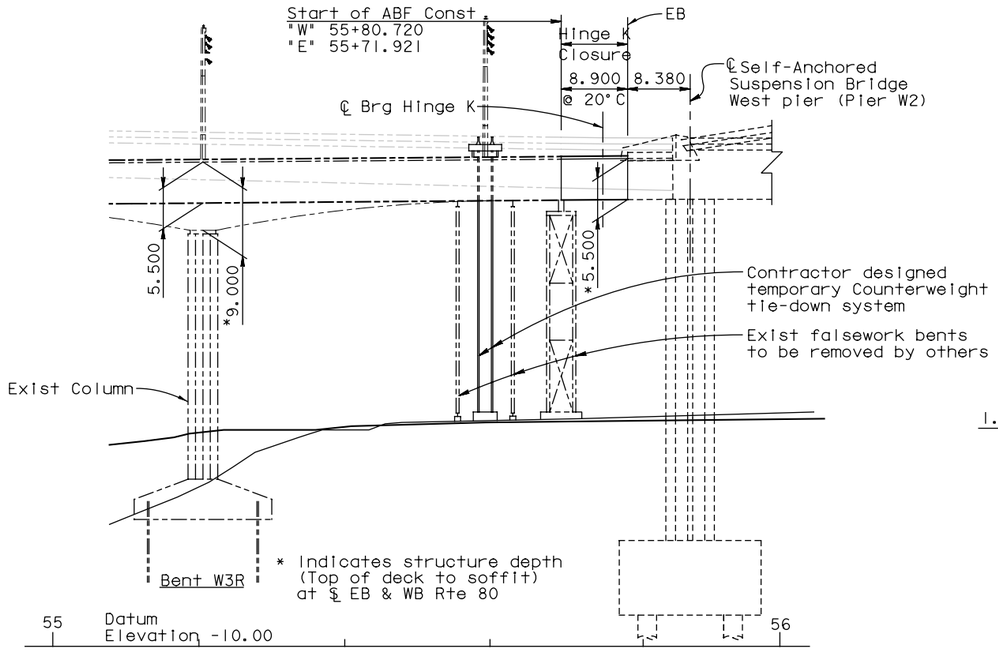

PARTIAL ELEVATION

(EB Structure shown, WB Structure similar)
1:400

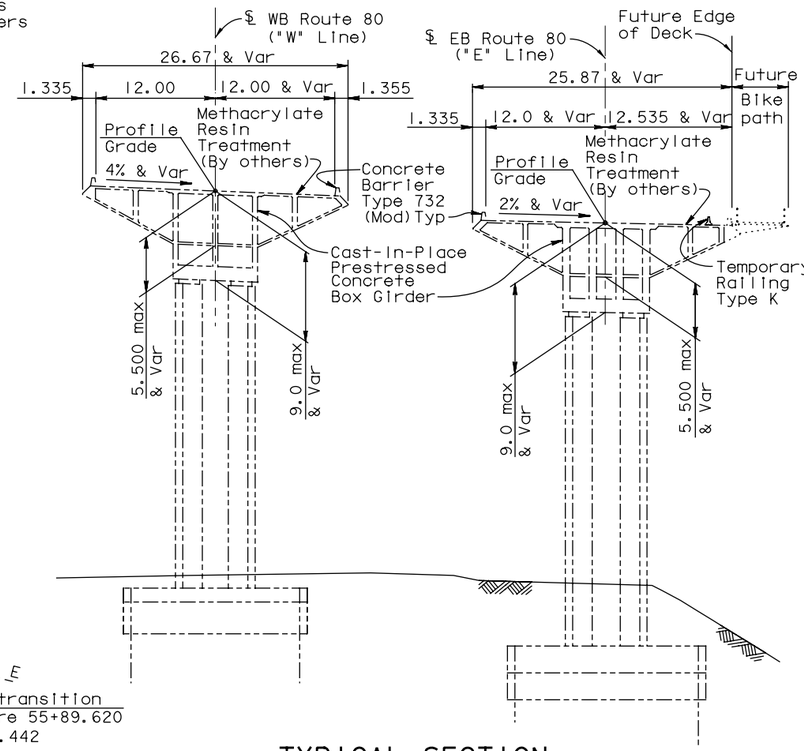

TYPICAL SECTION

(Bent W3L & W3R Shown)
1:300

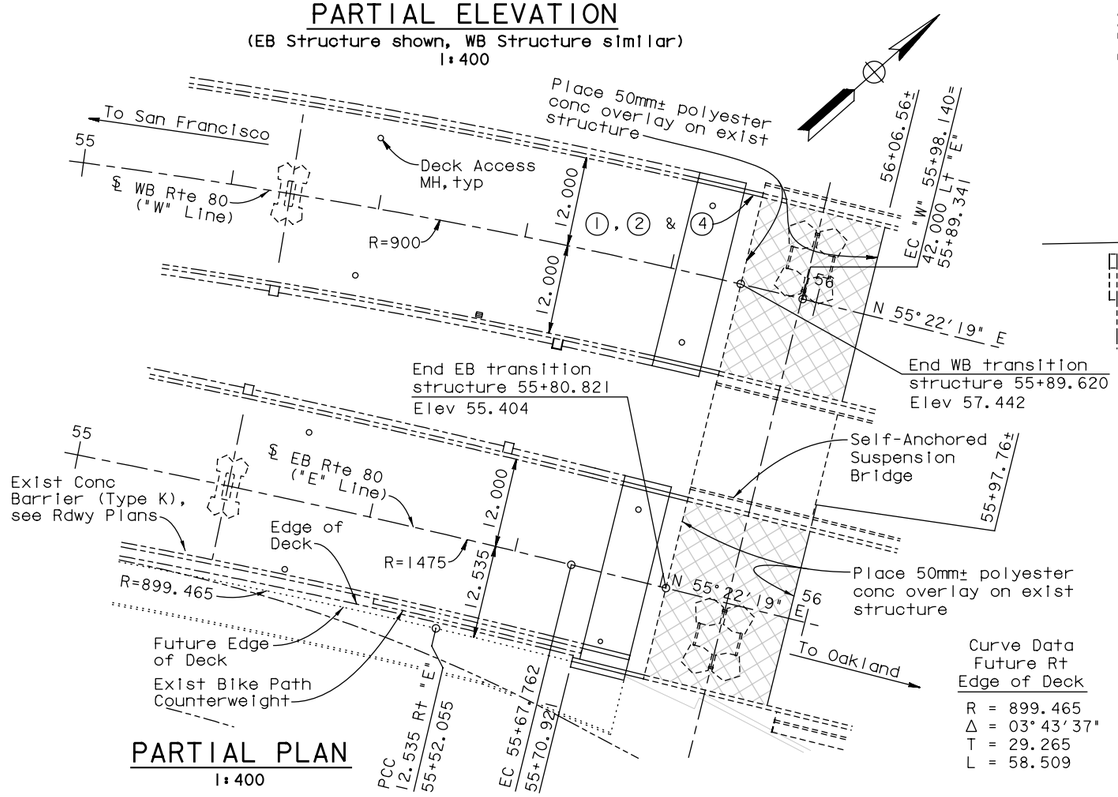

PARTIAL PLAN

1:400

Curve Data "W" Line

R = 900.000
Δ = 18°54'18"
T = 149.842
L = 296.961

Curve Data "E" Line

R = 1475.000
Δ = 13°51'19"
T = 179.215
L = 356.682

Curve Data Future Rt Edge of Deck

R = 899.465
Δ = 03°43'37"
T = 29.265
L = 58.509

Notes:

① Paint "YBI WB TRANSITION STRUCTURE"
② Paint "Bridge number 34-0006 L"
④ Paint hinge number

For General Notes see "Deck Contours" sheet.

For Approximate Bridge Quantities see "Foundation Plan" sheet.

———— Indicates existing structures

Standard Plan Sheet No.
Detail No.

ALL DIMENSIONS ARE IN METERS UNLESS OTHERWISE SHOWN

INDEX TO BRIDGE PLANS

SHEET NO.	TITLE
K1A	GENERAL PLAN
K5A	STRUCTURE PLAN
K9A	DECK CONTOURS
K13A	FOUNDATION PLAN
K118A	HINGE K CLOSURE DETAILS NO. 1
K119A	HINGE K CLOSURE DETAILS NO. 2
K120A	HINGE K CLOSURE DETAILS NO. 3
K121A	HINGE K CLOSURE DETAILS NO. 4
K122A	HINGE K CLOSURE DETAILS NO. 5
K123A	HINGE K CLOSURE DETAILS NO. 6
K124A	HINGE K CLOSURE DETAILS NO. 7
K124AA	HINGE K CLOSURE DETAILS NO. 7A
K125A	HINGE K CLOSURE DETAILS NO. 8
K126A	HINGE K CLOSURE DETAILS NO. 9
K127A	HINGE K CLOSURE DETAILS NO. 10
K128A	HINGE K CLOSURE DETAILS NO. 11
K129A	HINGE K CLOSURE DETAILS NO. 12
K130A	HINGE K CLOSURE DETAILS NO. 13
K131A	HINGE K CLOSURE DETAILS NO. 14
K132A	HINGE K CLOSURE DETAILS NO. 15
K148A	HINGE KE & KW EXPANSION JOINT DETAILS NO. 1
K149A	HINGE KE & KW EXPANSION JOINT DETAILS NO. 2
K150A	HINGE KE & KW EXPANSION JOINT DETAILS NO. 3
K151A	HINGE KE & KW EXPANSION JOINT DETAILS NO. 4
K152A	HINGE KE & KW EXPANSION JOINT DETAILS NO. 5
K153A	HINGE KE & KW EXPANSION JOINT DETAILS NO. 6
K154A	HINGE KE & KW EXPANSION JOINT DETAILS NO. 7
K155A	HINGE KE & KW EXPANSION JOINT DETAILS NO. 8
K156A	HINGE KE & KW EXPANSION JOINT DETAILS NO. 9
K156AA	HINGE KE & KW EXPANSION JOINT DETAILS NO. 10
K156BA	HINGE K PIPE BEAM DUST COVER DETAILS
K159A	FUTURE BIKE PATH DETAILS NO. 1
K161A	FUTURE BIKE PATH DETAILS NO. 2
K166A	CONCRETE BARRIER TYPE 732 (MOD)

SUPPLEMENTAL SHEET

CONTRACT CHANGE ORDER NO. _____
SHEET ____ OF ____

SAN FRANCISCO OAKLAND BAY BRIDGE
EAST SPAN SEISMIC SAFETY PROJECT

YBI TRANSITION STRUCTURES - HINGE K

STRUCTURE PLAN

DESIGN OVERSIGHT: ADE AKINSANYA
SIGN OFF DATE
Rev. Date: 5-18-98

	BY	CHECKED
DESIGN	Desai	Jain
DETAILS	van Ryn/Zucchi/Mai	Jain
QUANTITIES	Liao	E. Nichol

PREPARED FOR THE STATE OF CALIFORNIA DEPARTMENT OF TRANSPORTATION

Jal Birdy
PROJECT ENGINEER

CU 04
EA 0120F1

BRIDGE NO. 34-0006 L/R
KILOMETER POST 12.8

ORIGINAL SCALE IN MILLIMETERS FOR REDUCED PLANS 0 10 20 30 40 50 60 70 80 90 100

DISREGARD PRINTS BEARING EARLIER REVISION DATES

REVISION DATES (PRELIMINARY STAGE ONLY)

SHEET K5A OF 209

Jan 6, 2012

USERNAME => fsamson DATE PLOTTED => 1/18/2012 TIME PLOTTED => 8:53:45 AM

FILE => P:\4141-06\CADD\TS\Checked Plans\YBITS #1-100% No. 2_03-03-08 (Final Renamed)\011212 Hinge K SAS T19 CCO\MN sheets\04-0120f1-34-006r1-c-sp01.dgn

DIST.	COUNTY	ROUTE	KILOMETER POST TOTAL PROJECT	SHEET NO.	TOTAL SHEETS
04	SF	80	12.7/13.2	K558A	806

REGISTERED ENGINEER - CIVIL
01/20/2012
PLANS APPROVAL DATE

REGISTERED PROFESSIONAL ENGINEER A.L. ELY No. 18880 Exp. 6-30-13 CIVIL STATE OF CALIFORNIA

The State of California or its officers or agents shall not be responsible for the accuracy or completeness of electronic copies of this plan sheet.

T.Y. LIN / MOFFATT & NICHOL
TWO HARRISON STREET
SAN FRANCISCO, CA 94105

Caltrans Metric

CONTRACT CHANGE ORDER NO._____
SHEET_____OF _____

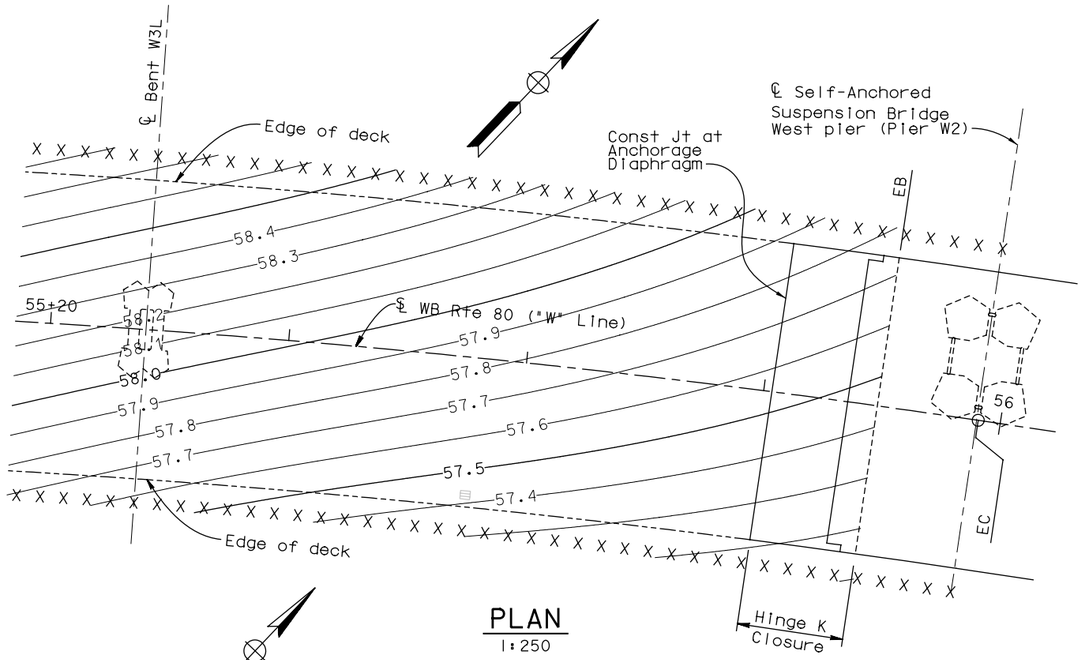

PLAN
1:250

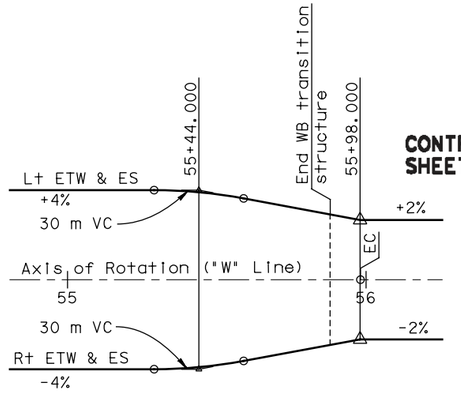

WESTBOUND SUPERELEVATION DIAGRAM
No Scale

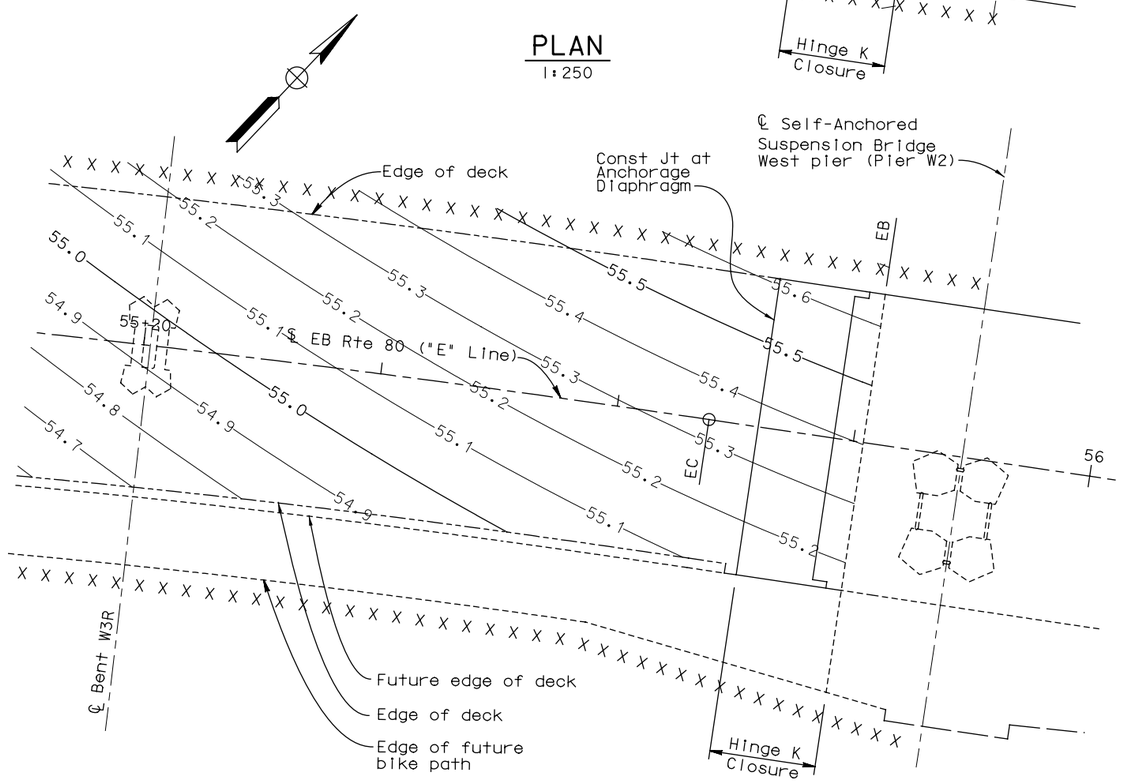

PLAN
1:250

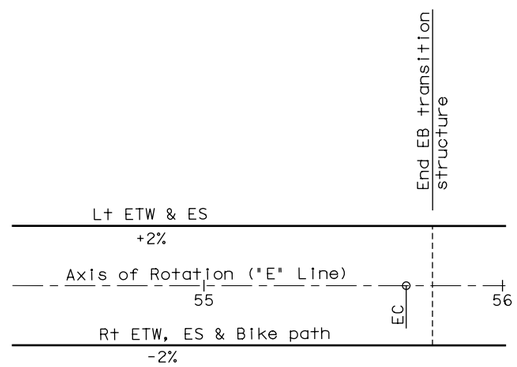

EASTBOUND SUPERELEVATION DIAGRAM
No Scale

GENERAL NOTES

Load Factor Design

Design: Caltrans Design Specifications-April 2000 (LFD)
(1996 AASHTO with Interims and revisions by Caltrans)
Dead Load: Includes 1675 N/m2 for future wearing surface on roadbed
Live Load: HS20-44 and alternative and permit design load
Bike Path Live Load: 4000 N/m2
Future Mass Transit Loading:

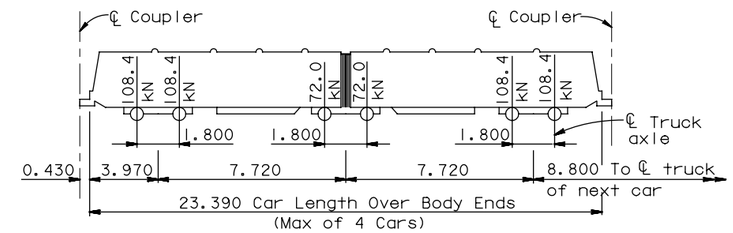

Seismic Loading: Refer to project specific seismic design criteria for San Francisco Oakland Bay Bridge East Span Seismic Safety Project Dated 01-08-00 See "Site Specific Response Spectra"

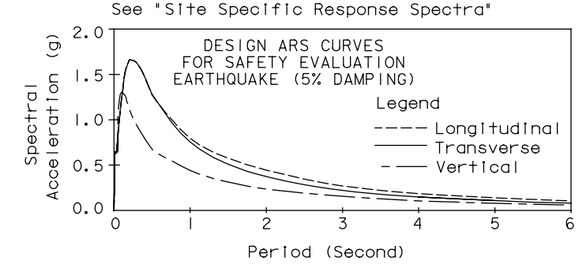

SITE SPECIFIC RESPONSE SPECTRA

Reinforced Concrete: Fy = 420 MPa
F'c = 46 MPa
N = 8

Transverse Deck Slabs
(Working Stress Design)
Fs = 140 MPa
Fc = 8 MPa
N = 10

NOTES:
Contours shown do not include camber.
X indicates 2 meter interval along "W" or "E" Line
Contour interval shown is 0.1 m.

ALL DIMENSIONS ARE IN METERS UNLESS OTHERWISE SHOWN

SAN FRANCISCO OAKLAND BAY BRIDGE
EAST SPAN SEISMIC SAFETY PROJECT

YBI TRANSITION STRUCTURES - HINGE K

DECK CONTOURS

DESIGN OVERSIGHT
ADE AKINSANYA
SIGN OFF DATE

	BY	CHECKED
DESIGN	Alcaraz	Desai
DETAILS	van Ryn/Zucchi/Mai	Jain
QUANTITIES	Liao	E. Nichol

PREPARED FOR THE STATE OF CALIFORNIA DEPARTMENT OF TRANSPORTATION

Jal Birdy
PROJECT ENGINEER

BRIDGE NO. 34-0006 L/R
KILOMETER POST 12.8

Rev. Date: 5-18-98

ORIGINAL SCALE IN MILLIMETERS FOR REDUCED PLANS 0 10 20 30 40 50 60 70 80 90 100

CU 04
EA 0120F1

DISREGARD PRINTS BEARING EARLIER REVISION DATES

REVISION DATES (PRELIMINARY STAGE ONLY)

SHEET K9A OF 209

FILE => P:\4141-06\CADD\TS\Checked Plans\YBITS =1-100% No. 2_03-03-08 (Final Renamed)\010612 Hinge K SAS T19 CCO\04-0120F1-34-006R1-d-dc01.dgn

Jan 6, 2012

USERNAME => fsamson DATE PLOTTED => 1/5/2012 TIME PLOTTED => 5:04:52 PM

DIST.	COUNTY	ROUTE	KILOMETER POST TOTAL PROJECT	SHEET NO.	TOTAL SHEETS
04	SF	80	12.7/13.2	K562A	806

Caltrans Metric

REGISTERED ENGINEER - CIVIL
01/20/2012
PLANS APPROVAL DATE

REGISTERED PROFESSIONAL ENGINEER A.L. ELY No. 18880 Exp. 6-30-13 CIVIL STATE OF CALIFORNIA

The State of California or its officers or agents shall not be responsible for the accuracy or completeness of electronic copies of this plan sheet.

T.Y. LIN / MOFFATT & NICHOL
TWO HARRISON STREET
SAN FRANCISCO, CA 94105

LEGEND

Denotes bottom of footing elevation

Denotes existing structure

CONTRACT CHANGE ORDER NO._____
SHEET_____OF_____

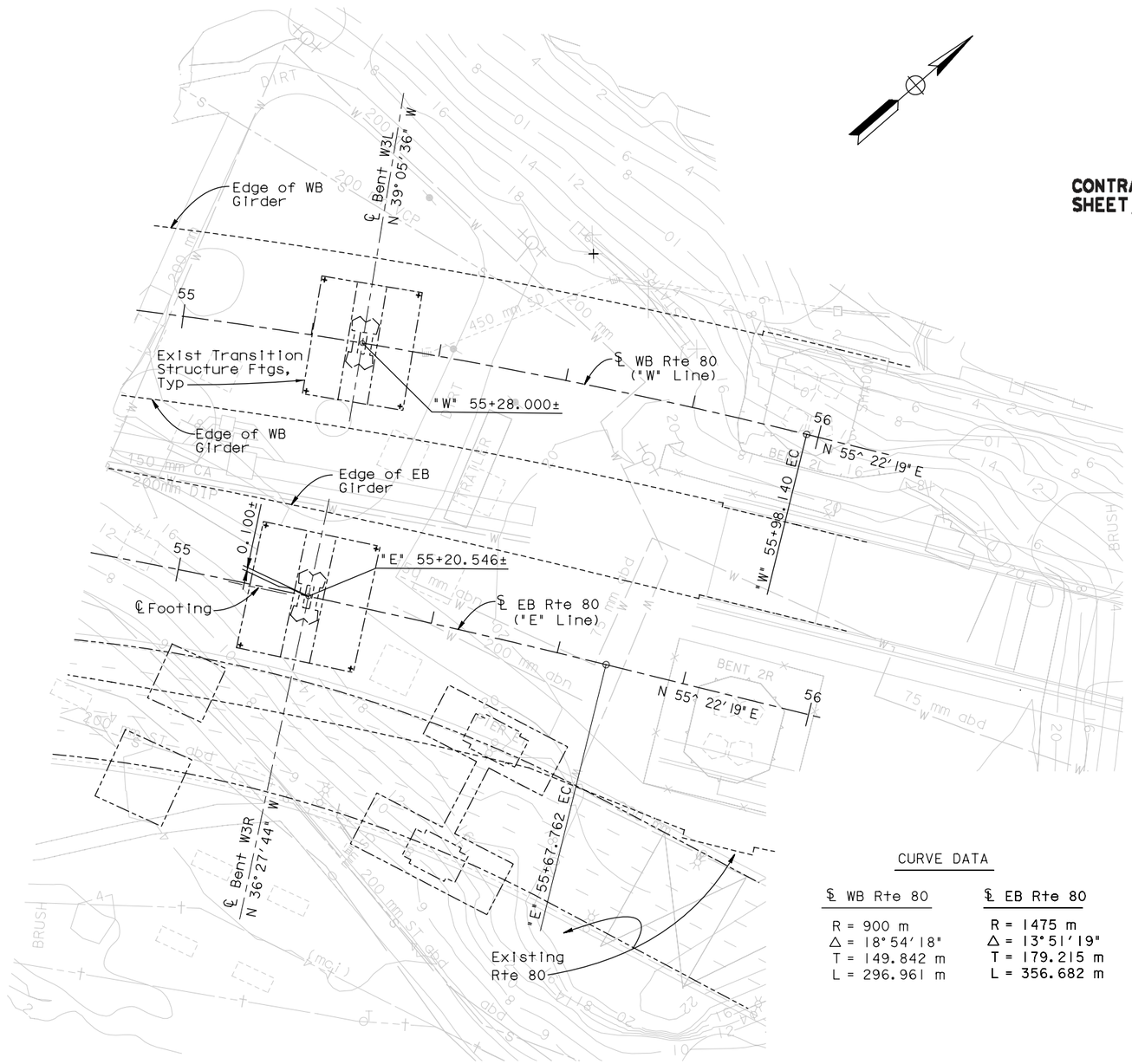

PARTIAL PLAN
1:400

CURVE DATA

℄ WB Rte 80	℄ EB Rte 80
R = 900 m	R = 1475 m
Δ = 18°54'18"	Δ = 13°51'19"
T = 149.842 m	T = 179.215 m
L = 296.961 m	L = 356.682 m

QUANTITIES

TEMPORARY COUNTERWEIGHT TIE-DOWN SYSTEM .....LUMP SUM
PREPARE CONCRETE BRIDGE DECK SURFACE.....813 m^2
STRUCTURAL CONCRETE, BRIDGE.....707 m^3
MINOR CONCRETE (CONCRETE BALLAST) (50MM).....36 m^3
FURNISH POLYESTER CONCRETE OVERLAY.....41 m^3
PLACE POLYESTER CONCRETE OVERLAY (50MM).....813 m^2
INSTALL HINGE K BEARING ASSEMBLY.....4 EA
INSTALL SEISMIC JOINT (HINGE KW).....LUMP SUM
INSTALL SEISMIC JOINT (HINGE KE).....LUMP SUM
BAR REINFORCING STEEL (BRIDGE).....172,872 kg
HEADED BAR REINFORCEMENT.....4,072 EA
CLEAN AND PAINT STRUCTURAL STEEL.....LUMP SUM
(MISCELLANEOUS FACILITIES)
MISCELLANEOUS METAL (BRIDGE).....LUMP SUM
CONCRETE BARRIER (TYPE 732 MODIFIED).....46 m

ALL DIMENSIONS ARE IN METERS UNLESS OTHERWISE SHOWN

SAN FRANCISCO OAKLAND BAY BRIDGE
EAST SPAN SEISMIC SAFETY PROJECT

YBI TRANSITION STRUCTURES - HINGE K

FOUNDATION PLAN

GEOTECHNICAL PROFESSIONAL APPROVAL DATE 3/3/08

Jan 6, 2012

DESIGN OVERSIGHT ADE AKINSANYA
SIGN OFF DATE

SCALE: | VERT. DATUM NGVD 29 | HORZ. DATUM NAD 83
PHOTOGRAMMETRY AS OF: | ALIGNMENT TIES
SURVEYED BY | DRAFTED BY
FIELD CHECKED BY | CHECKED BY

DESIGN BY Desai CHECKED Jain
DETAILS BY Van Ryn/Zucchi/Mai CHECKED Jain
QUANTITIES BY Liao CHECKED E. Nichol

PREPARED FOR THE STATE OF CALIFORNIA DEPARTMENT OF TRANSPORTATION

Jai Birdy
PROJECT ENGINEER

BRIDGE NO. 34-0006 L/R
KILOMETER POST 12.8

Rev. Date: 5-18-98

ORIGINAL SCALE IN MILLIMETERS FOR REDUCED PLANS 0 10 20 30 40 50 60 70 80 90 100

CU 04
EA 0120F1

DISREGARD PRINTS BEARING EARLIER REVISION DATES

REVISION DATES (PRELIMINARY STAGE ONLY)

SHEET K13A OF 209

USERNAME => fsamson DATE PLOTTED => 1/6/2012 TIME PLOTTED => 1:52:25 PM

FILE => P:\4141-06\CADD\TS\Checked Plans\YBITS #1-100% No. 2_03-03-08 (Final Renamed)\010612 Hinge K SAS T19 CCO\04-0120f1-34-006r1-e-fp101.dgn

DIST.	COUNTY	ROUTE	KILOMETER POST TOTAL PROJECT	SHEET NO.	TOTAL SHEETS
04	SF	80	12.7/13.2	K667A	806

REGISTERED ENGINEER - CIVIL
01/20/2012
PLANS APPROVAL DATE

REGISTERED PROFESSIONAL ENGINEER A.L. ELY No. 18880 Exp. 6-30-13 CIVIL STATE OF CALIFORNIA

The State of California or its officers or agents shall not be responsible for the accuracy or completeness of electronic copies of this plan sheet.

T.Y. LIN / MOFFATT & NICHOL
TWO HARRISON STREET
SAN FRANCISCO, CA 94105

Caltrans Metric

SUPPLEMENTAL SHEET

CONTRACT CHANGE ORDER NO. ____
SHEET ___ OF ___

Notes:
- Hinge K closure pour not to be placed until a min of 75 days after prestressing adjacent frame.
- At EB structure, bike path counterweight shall be placed prior to placement of Hinge K closure pour.
- Prior to placement of Hinge K closure concrete, counterweights shall be placed at the cantilever ends of the adjacent frames to balance a portion of the dead load reaction of the closure concrete (approx 13 300 KN). Center of gravity of counterweight to be located at station line for WB Structure and 625 mm south of station line for EB Structure. Counterweights to be removed after closure concrete has attained required strength and prior to falsework release.
- Concrete ballast within Hinge K closure shall be placed after Hinge K bearing assembly is grouted in final position.

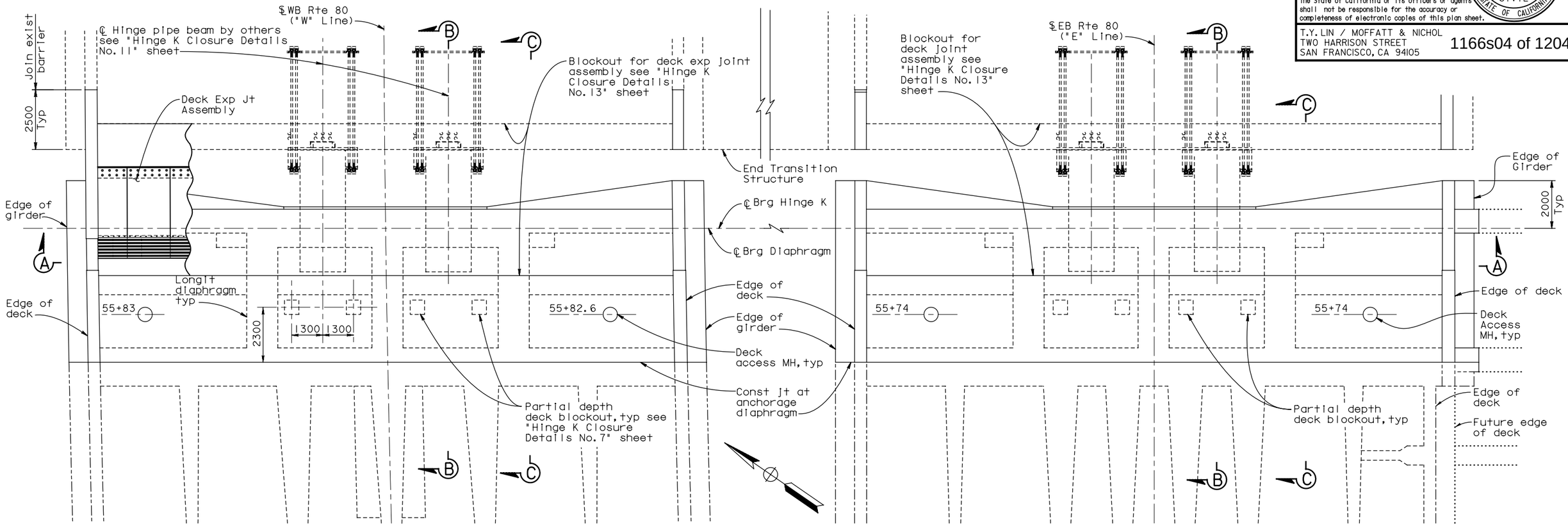

PLAN
1:80

Note: For Sections B-B & C-C see "Hinge K Closure Details No. 2" sheet.

** Indicates dimension measured at ℄ Brg Hinge K

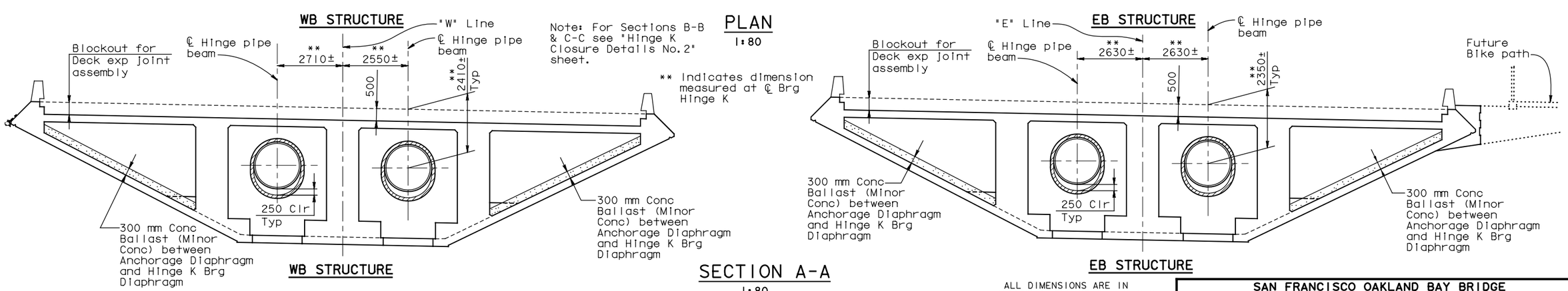

SECTION A-A
1:80

ALL DIMENSIONS ARE IN MILLIMETERS UNLESS OTHERWISE SHOWN

SAN FRANCISCO OAKLAND BAY BRIDGE
EAST SPAN SEISMIC SAFETY PROJECT

YBI TRANSITION STRUCTURES - HINGE K

HINGE K CLOSURE DETAILS NO. 1

DESIGN OVERSIGHT ADE AKINSANYA			
SIGN OFF DATE			
Rev. Date: 5-18-98			

	BY	CHECKED
DESIGN	Lee	Atiqullah
DETAILS	van Ryn/Zucchi/Mai	Jain
QUANTITIES	Liao	E. Nichol

PREPARED FOR THE STATE OF CALIFORNIA DEPARTMENT OF TRANSPORTATION

Jal Birdy
PROJECT ENGINEER

BRIDGE NO. 34-0006 L/R
KILOMETER POST 12.8

ORIGINAL SCALE IN MILLIMETERS FOR REDUCED PLANS 0 10 20 30 40 50 60 70 80 90 100

CU 04
EA 0120F1

DISREGARD PRINTS BEARING EARLIER REVISION DATES

REVISION DATES (PRELIMINARY STAGE ONLY)

SHEET K118A OF 209

FILE => P:\4141-06\CADD\TS\Checked Plans\YBITS #1-100% No. 2_03-03-08 (Final Renamed)\010612 Hinge K SAS T19 CCO\04-0120F1-34-006r1-n-hingedt01.dgn

Jan 6, 2012

USERNAME => fsamson DATE PLOTTED => 1/5/2012 TIME PLOTTED => 5:19:24 PM

DIST.	COUNTY	ROUTE	KILOMETER POST TOTAL PROJECT	SHEET NO.	TOTAL SHEETS
04	SF	80	12.7/13.2	K668A	806

Caltrans Metric

REGISTERED ENGINEER - CIVIL
01/20/2012
PLANS APPROVAL DATE

REGISTERED PROFESSIONAL ENGINEER A.L. ELY No. 18880 Exp. 6-30-13 CIVIL STATE OF CALIFORNIA

The State of California or its officers or agents shall not be responsible for the accuracy or completeness of electronic copies of this plan sheet.

T.Y. LIN / MOFFATT & NICHOL
TWO HARRISON STREET
SAN FRANCISCO, CA 94105

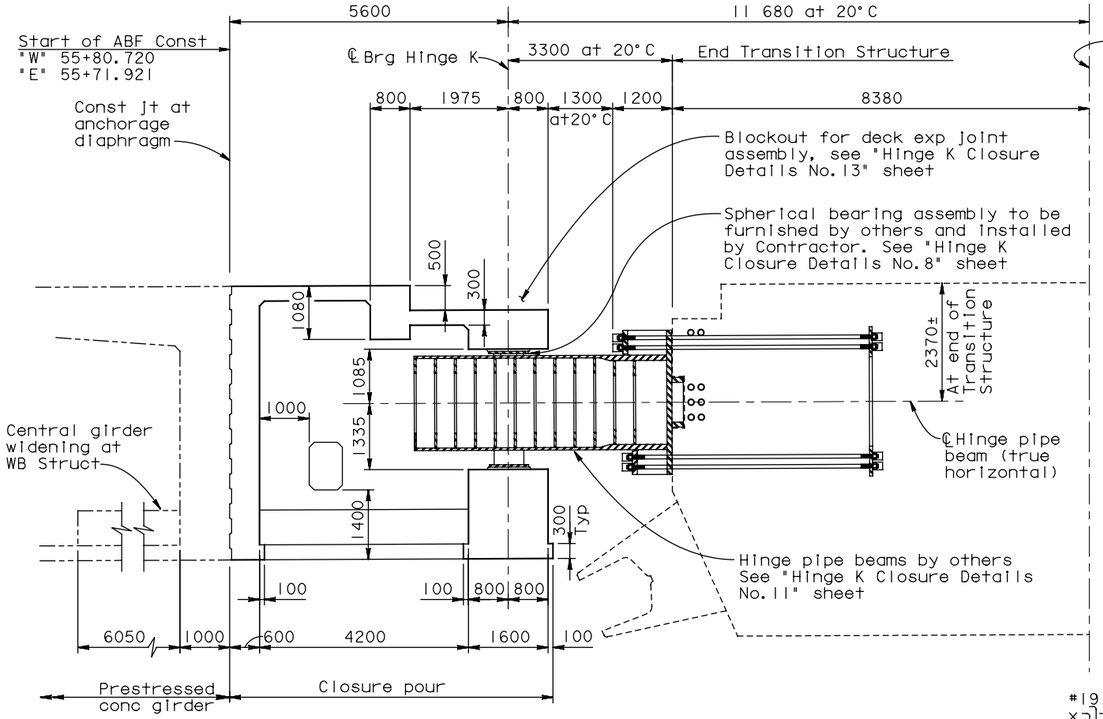

SECTION B-B - ADJACENT TO CENTRAL LONGIT DIAPHRAGM

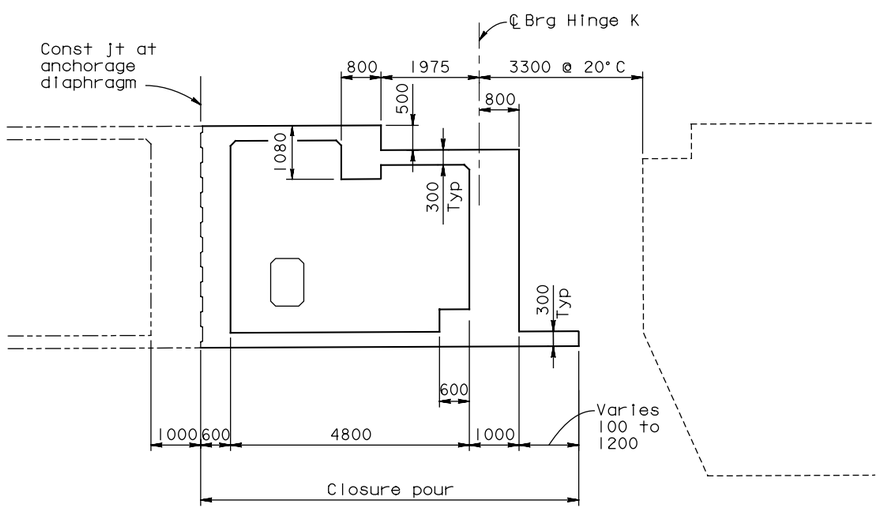

SECTION C-C - ADJACENT TO OUTER LONGIT DIAPHRAGM

LONGITUDINAL SECTIONS AT HINGE K CLOSURE

1:60

Note: For locations of Sections B-B & C-C see "Hinge K Closure Details No.1" sheet

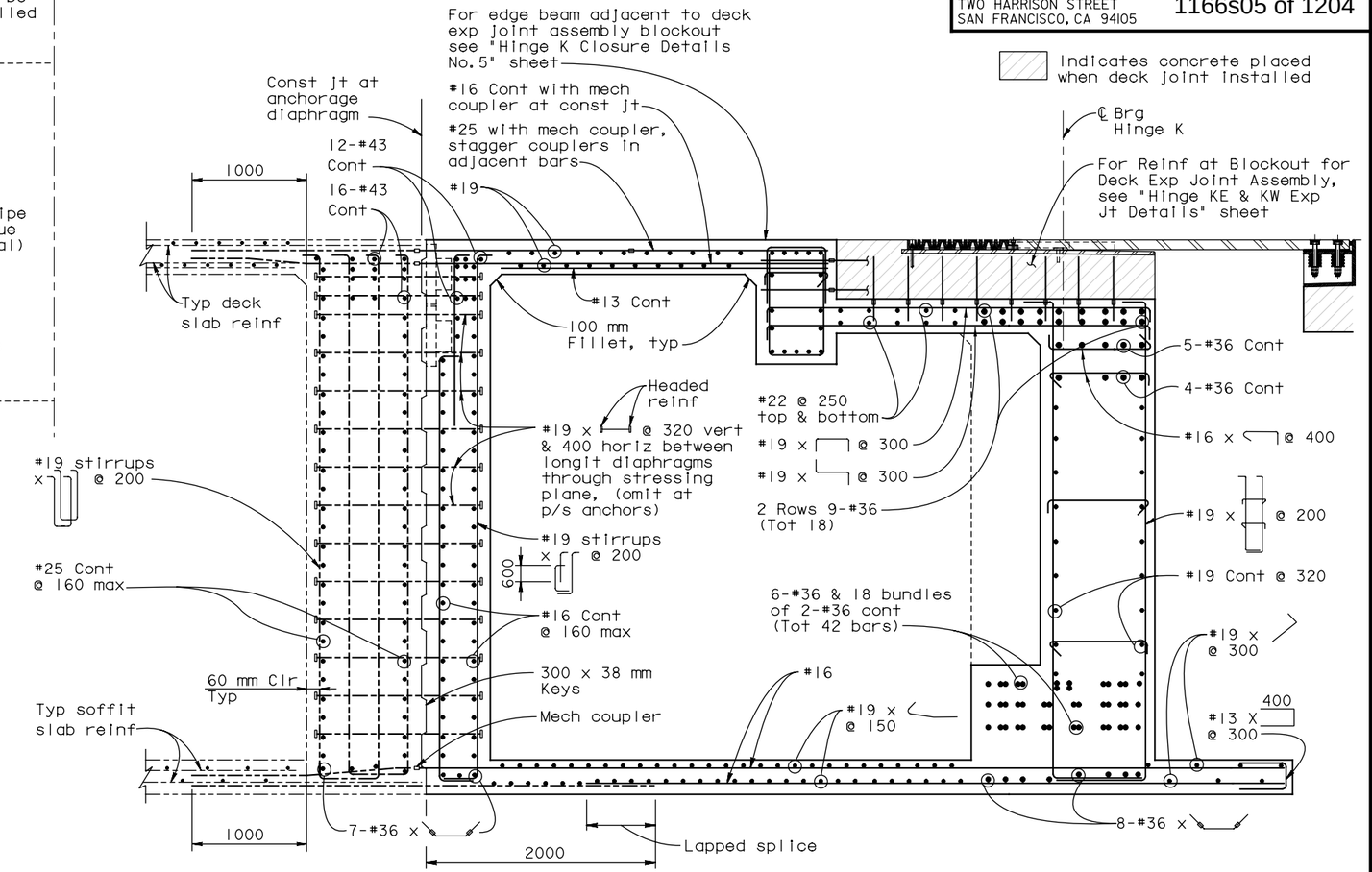

LONGITUDINAL SECTION REINFORCEMENT

(Shown adjacent to outer longit diaphragm)

1:25

SUPPLEMENTAL SHEET

CONTRACT CHANGE ORDER NO. _____
SHEET ____ OF ____

ALL DIMENSIONS ARE IN MILLIMETERS UNLESS OTHERWISE SHOWN

SAN FRANCISCO OAKLAND BAY BRIDGE
EAST SPAN SEISMIC SAFETY PROJECT

YBI TRANSITION STRUCTURES - HINGE K

HINGE K CLOSURE DETAILS NO.2

DESIGN OVERSIGHT			
ADE AKINSANYA	DESIGN	BY Lee	CHECKED Atiqullah
SIGN OFF DATE	DETAILS	BY van Ryn/Zucchi/Mai	CHECKED Jain
Rev. Date: 5-18-98	QUANTITIES	BY Liao	CHECKED E. Nichol

PREPARED FOR THE STATE OF CALIFORNIA DEPARTMENT OF TRANSPORTATION

Jal Birdy
PROJECT ENGINEER

BRIDGE NO. 34-0006 L/R
KILOMETER POST 12.8

ORIGINAL SCALE IN MILLIMETERS FOR REDUCED PLANS 0 10 20 30 40 50 60 70 80 90 100

CU 04
EA 0120F1

DISREGARD PRINTS BEARING EARLIER REVISION DATES

REVISION DATES (PRELIMINARY STAGE ONLY)

SHEET K119A OF 209

FILE => P:\4141-06\CADD\TS\Checked Plans\YBITS #1-100% No. 2_03-03-08 (Final Renamed)\011212 Hinge K SAS T19 CCO\MN sheets\04-0120f1-34-006r1-n-hinged+02.dgn

Jan 6, 2012

USERNAME => fsamson DATE PLOTTED => 1/18/2012 TIME PLOTTED => 8:54:11 AM

DIST.	COUNTY	ROUTE	KILOMETER POST TOTAL PROJECT	SHEET NO.	TOTAL SHEETS
04	SF	80	12.7/13.2	K669A	806

Caltrans Metric

REGISTERED ENGINEER - CIVIL
01/20/2012
PLANS APPROVAL DATE

REGISTERED PROFESSIONAL ENGINEER A.L. ELY No. 18880 Exp. 6-30-13 CIVIL STATE OF CALIFORNIA

The State of California or its officers or agents shall not be responsible for the accuracy or completeness of electronic copies of this plan sheet.

T.Y. LIN / MOFFATT & NICHOL
TWO HARRISON STREET
SAN FRANCISCO, CA 94105

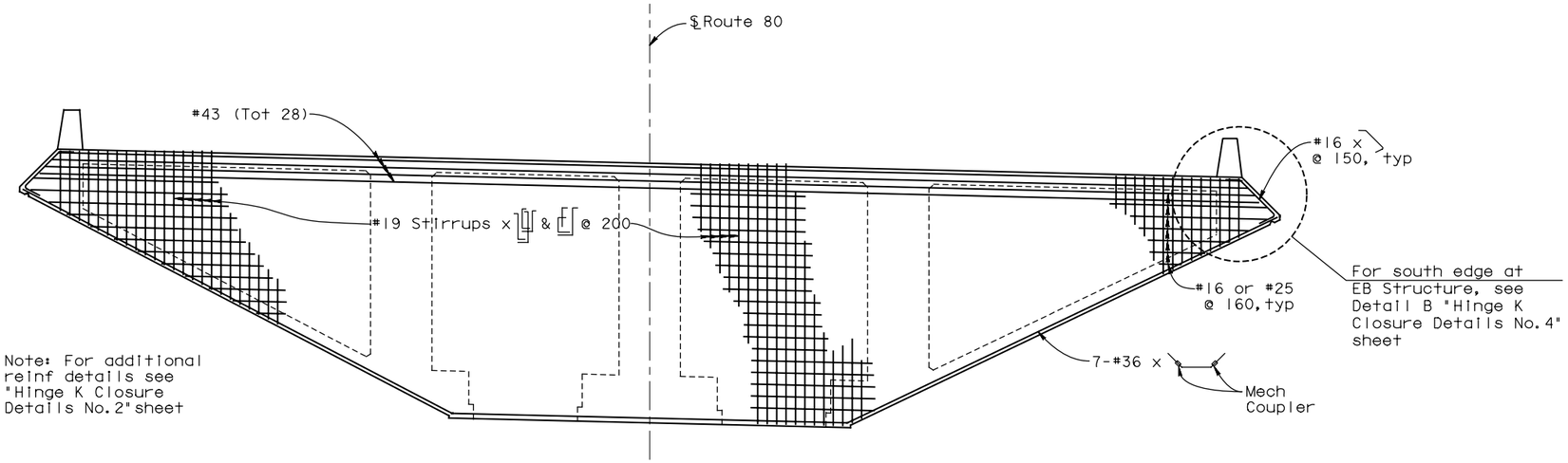

ELEVATION HINGE K CLOSURE ANCHORAGE DIAPHRAGM

(WB Structure shown, EB Structure similar except as noted)

1:60

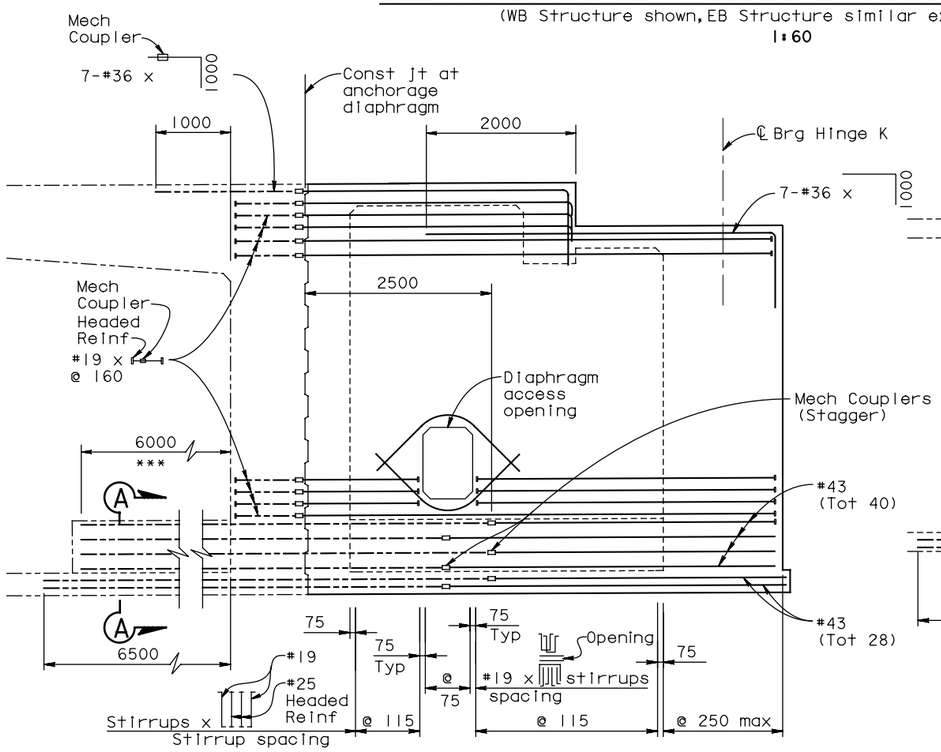

ELEVATION - CENTRAL LONGIT DIAPHRAGM

1:40

*** At EB Structure bend #43 bars as required to align bars with girder web.

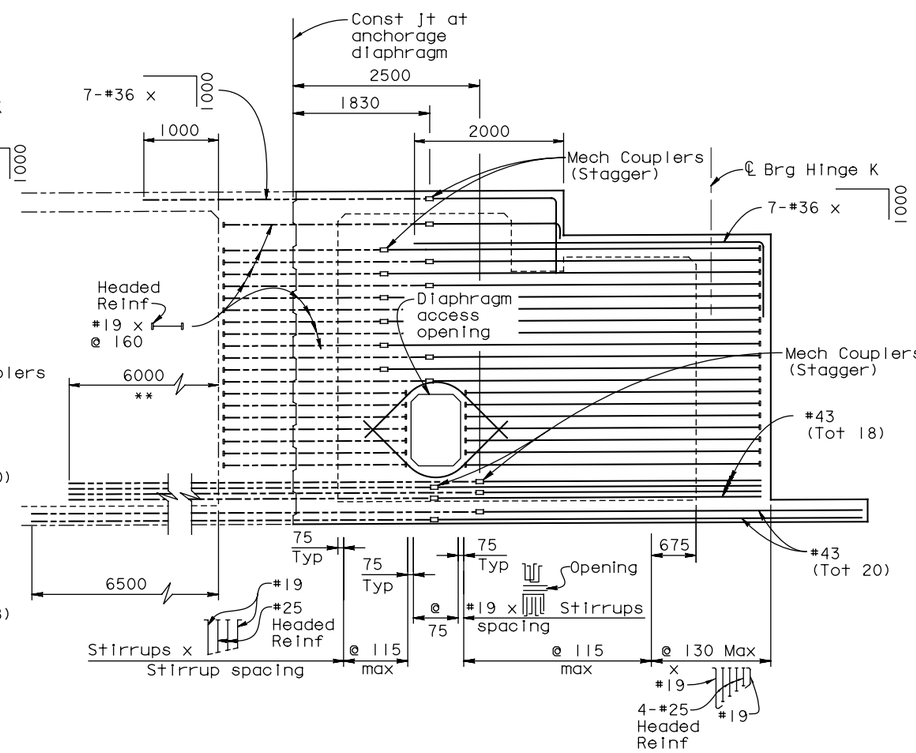

ELEVATION - OUTER LONGIT DIAPHRAGM

1:40

** Bend #43 bars as required to align bars with girder web.

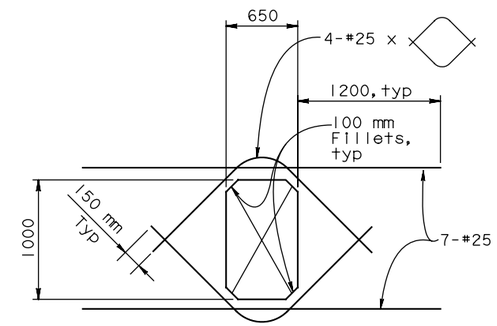

LONGIT DIAPHRAGM ACCESS OPENING

1:25

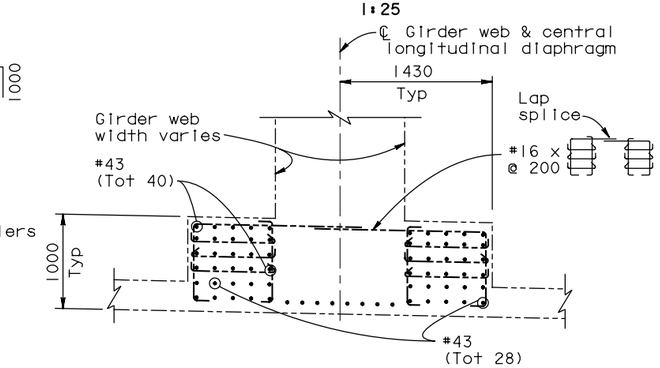

SECTION A-A

(Applicable at central longitudinal diaphragm for WB Structure only)

1:30

SUPPLEMENTAL SHEET

CONTRACT CHANGE ORDER NO. _____
SHEET ____ OF ____

ALL DIMENSIONS ARE IN MILLIMETERS UNLESS OTHERWISE SHOWN

SAN FRANCISCO OAKLAND BAY BRIDGE
EAST SPAN SEISMIC SAFETY PROJECT

YBI TRANSITION STRUCTURES - HINGE K

HINGE K CLOSURE DETAILS NO. 3

DESIGN OVERSIGHT ADE AKINSANYA			
SIGN OFF DATE			
Rev. Date: 5-18-98			

	BY	CHECKED
DESIGN	Lee	Atiqullah
DETAILS	van Ryn/Zucchi/Mai	Jain
QUANTITIES	Liao	E. Nichol

PREPARED FOR THE STATE OF CALIFORNIA DEPARTMENT OF TRANSPORTATION

Jal Birdy
PROJECT ENGINEER

BRIDGE NO. 34-0006 L/R
KILOMETER POST 12.8

ORIGINAL SCALE IN MILLIMETERS FOR REDUCED PLANS 0 10 20 30 40 50 60 70 80 90 100

CU 04
EA 0120F1

DISREGARD PRINTS BEARING EARLIER REVISION DATES

REVISION DATES (PRELIMINARY STAGE ONLY)

SHEET K120A OF 209

FILE => P:\4141-06\CADD\TS\Checked Plans\YBITS #1-100% No. 2_03-03-08 (Final Renamed)\010612 Hinge K SAS T19 CCO\04-0120f1-34-006r1-n-hingedt03.dgn

Jan 6, 2012

USERNAME => fsamson DATE PLOTTED => 1/5/2012 TIME PLOTTED => 5:19:45 PM

DIST.	COUNTY	ROUTE	KILOMETER POST TOTAL PROJECT	SHEET NO.	TOTAL SHEETS
04	SF	80	12.7/13.2	K670A	806

REGISTERED ENGINEER - CIVIL
01/20/2012
PLANS APPROVAL DATE
REGISTERED PROFESSIONAL ENGINEER A.L. ELY No. 18880 Exp. 6-30-13 CIVIL STATE OF CALIFORNIA

The State of California or its officers or agents shall not be responsible for the accuracy or completeness of electronic copies of this plan sheet.

T.Y. LIN / MOFFATT & NICHOL
TWO HARRISON STREET
SAN FRANCISCO, CA 94105

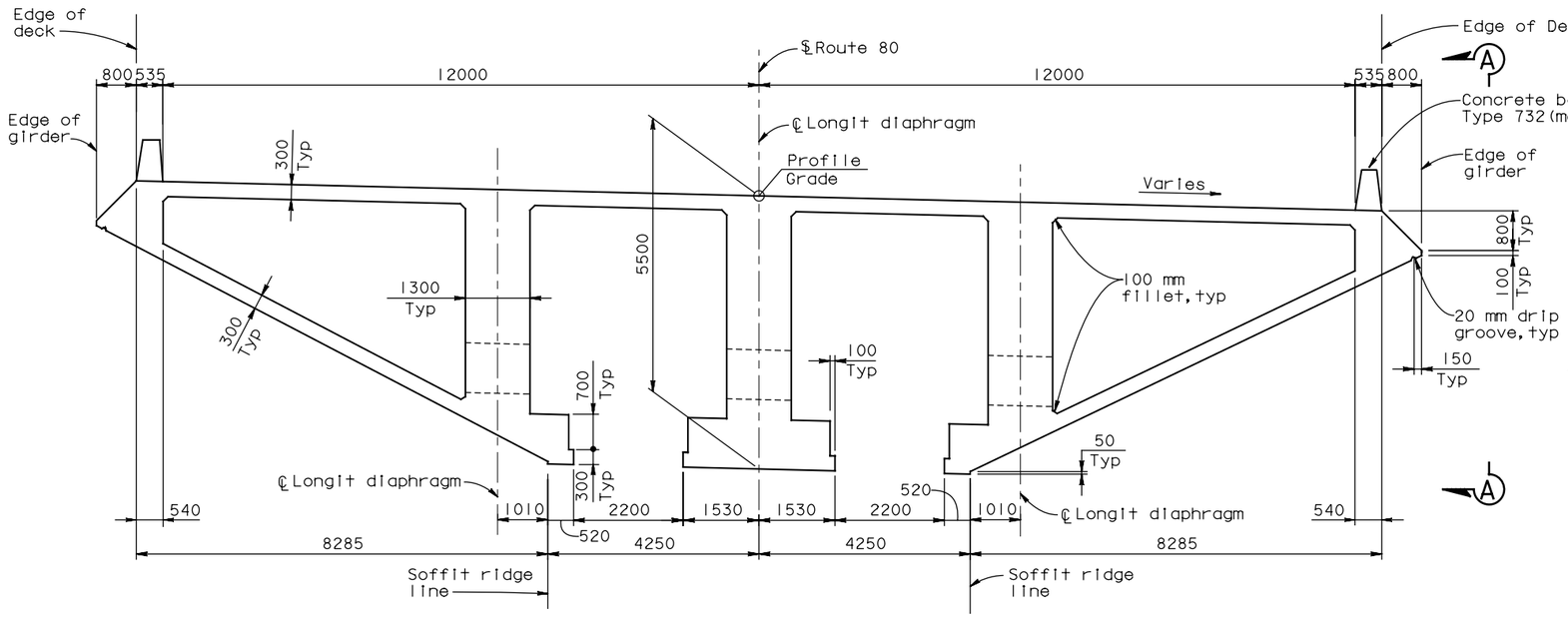

TYPICAL SECTION AT HINGE K CLOSURE

(WB Structure shown, EB Structure similar except as noted)

1:60

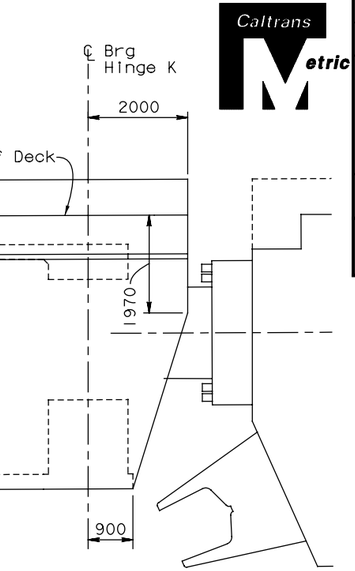

ELEVATION A-A

1:60

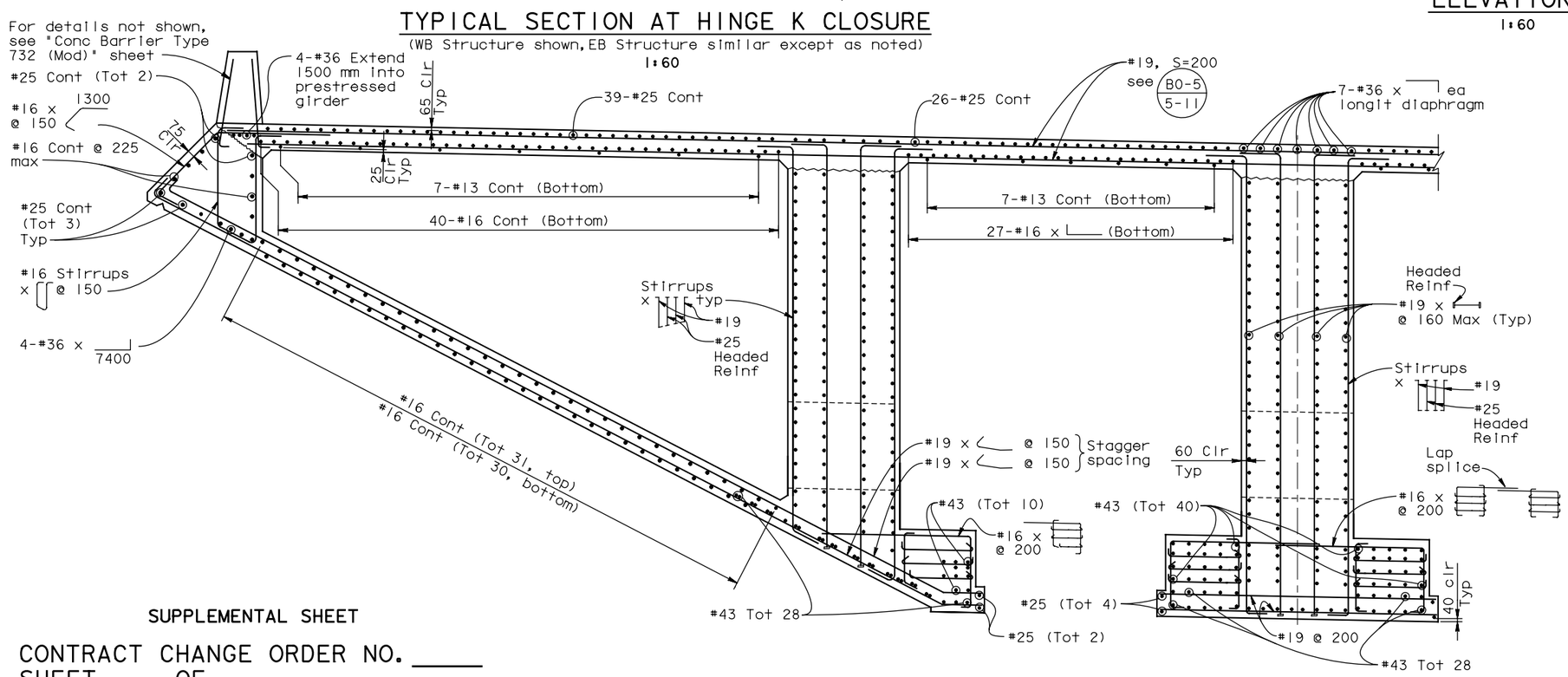

PARTIAL TYPICAL SECTION

1:30

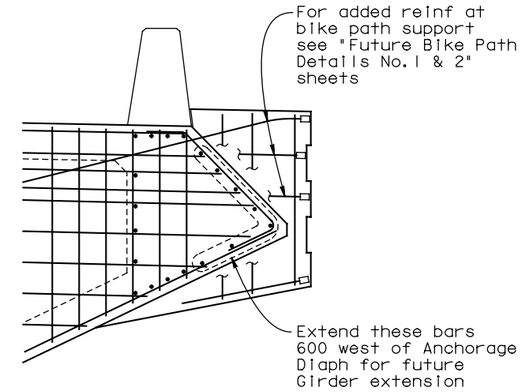

SOUTH EDGE EB STRUCTURE AT ANCHORAGE DIAPHRAGM

DETAIL B

1:25

Note: For location of Detail B see "Hinge K Closure Details No.3" sheet.

SUPPLEMENTAL SHEET

CONTRACT CHANGE ORDER NO. _____
SHEET ____ OF ____

ALL DIMENSIONS ARE IN MILLIMETERS UNLESS OTHERWISE SHOWN

SAN FRANCISCO OAKLAND BAY BRIDGE
EAST SPAN SEISMIC SAFETY PROJECT

YBI TRANSITION STRUCTURES - HINGE K

HINGE K CLOSURE DETAILS NO. 4

DESIGN OVERSIGHT ADE AKINSANYA
SIGN OFF DATE
Rev. Date: 5-18-98

	BY	CHECKED
DESIGN	Lee	Atiqullah
DETAILS	van Ryn/Zucchi/Mai	Jain
QUANTITIES	Liao	E. Nichol

PREPARED FOR THE STATE OF CALIFORNIA DEPARTMENT OF TRANSPORTATION

Jal Birdy
PROJECT ENGINEER

BRIDGE NO. 34-0006 L/R
KILOMETER POST 12.8

ORIGINAL SCALE IN MILLIMETERS FOR REDUCED PLANS 0 10 20 30 40 50 60 70 80 90 100

CU 04
EA 0120F1

DISREGARD PRINTS BEARING EARLIER REVISION DATES

REVISION DATES (PRELIMINARY STAGE ONLY)

SHEET K121A OF 209

FILE => P:\4141-06\CADD\TS\Checked Plans\YBITS #1-100% No. 2_03-03-08 (Final Renamed)\010612 Hinge K SAS T19 CCO\04-0120f1-34-006r1-n-hingedt04.dgn

Jan 6, 2012

USERNAME => fsamson DATE PLOTTED => 1/5/2012 TIME PLOTTED => 5:19:56 PM

DIST.	COUNTY	ROUTE	KILOMETER POST TOTAL PROJECT	SHEET NO.	TOTAL SHEETS
04	SF	80	12.7/13.2	K671A	806

Caltrans Metric

REGISTERED ENGINEER - CIVIL
01/20/2012
PLANS APPROVAL DATE

REGISTERED PROFESSIONAL ENGINEER A.L. ELY No. 18880 Exp. 6-30-13 CIVIL STATE OF CALIFORNIA

The State of California or its officers or agents shall not be responsible for the accuracy or completeness of electronic copies of this plan sheet.

T.Y. LIN / MOFFATT & NICHOL
TWO HARRISON STREET
SAN FRANCISCO, CA 94105

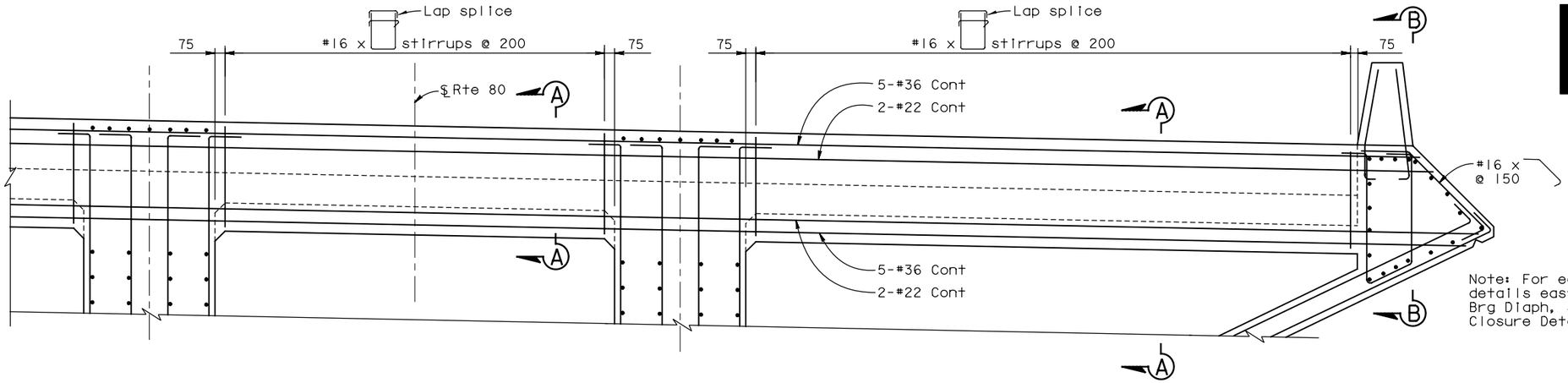

Note: For edge of deck details east of Hinge K Brg Diaph, see "Hinge K Closure Details No.7" sheet.

PARTIAL ELEVATION EDGE BEAM ADJACENT TO EXPANSION JOINT ASSEMBLY BLOCKOUT

1:25

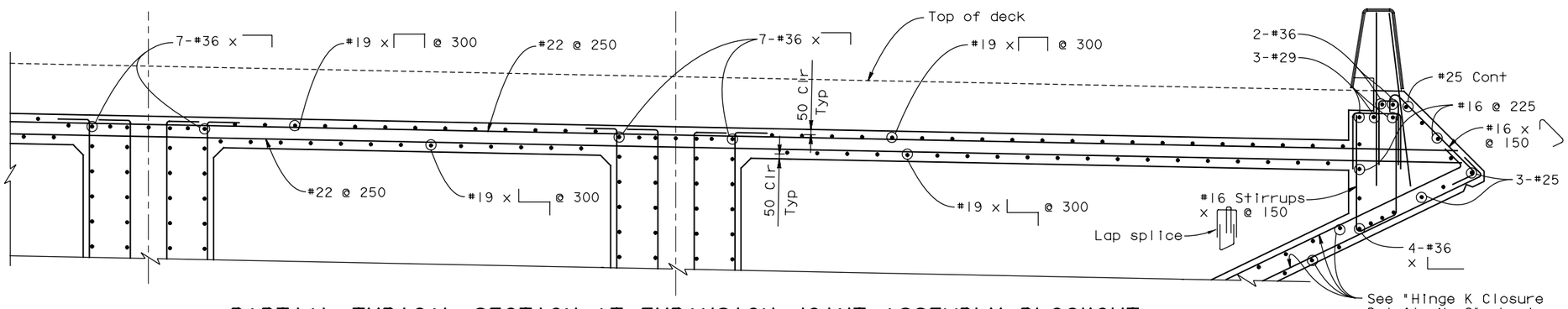

Note: For reinf at blockout for deck exp joint assembly, see "Hinge KE & KW Expansion Joint Details" sheet.

PARTIAL TYPICAL SECTION AT EXPANSION JOINT ASSEMBLY BLOCKOUT

1:25

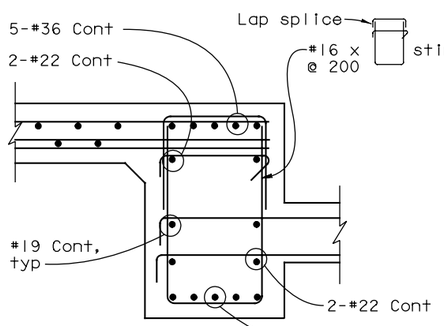

SECTION A-A

1:15

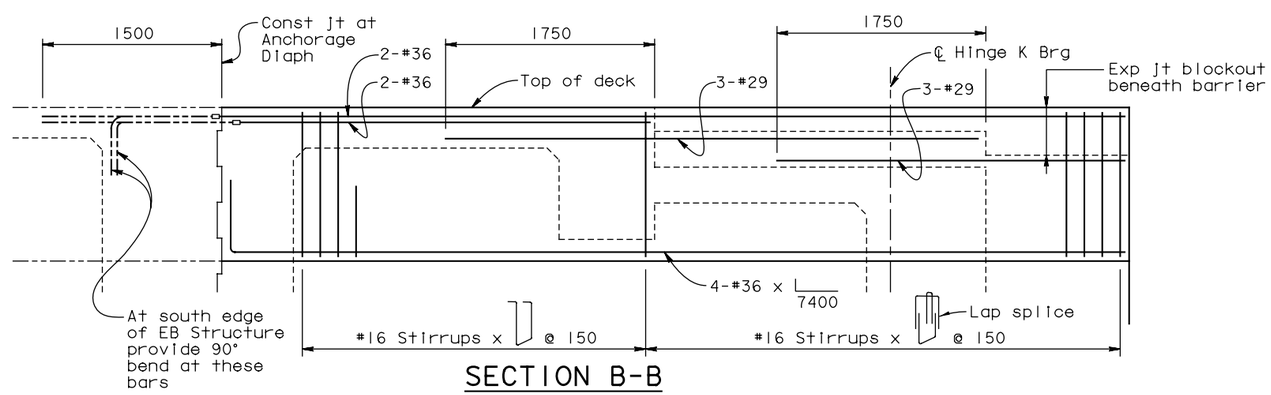

SECTION B-B

1:25

SUPPLEMENTAL SHEET

CONTRACT CHANGE ORDER NO. _____
SHEET ____ OF ____

ALL DIMENSIONS ARE IN MILLIMETERS UNLESS OTHERWISE SHOWN

SAN FRANCISCO OAKLAND BAY BRIDGE
EAST SPAN SEISMIC SAFETY PROJECT

YBI TRANSITION STRUCTURES - HINGE K

HINGE K CLOSURE DETAILS NO.5

DESIGN OVERSIGHT ADE AKINSANYA
SIGN OFF DATE
Rev. Date: 5-18-98

	BY	CHECKED
DESIGN	Lee	Wang
DETAILS	van Ryn/Zucchi/Mai	Jain
QUANTITIES	Liao	E. Nichol

PREPARED FOR THE STATE OF CALIFORNIA DEPARTMENT OF TRANSPORTATION

Jal Birdy
PROJECT ENGINEER

BRIDGE NO. 34-0006 L/R
KILOMETER POST 12.8

ORIGINAL SCALE IN MILLIMETERS FOR REDUCED PLANS 0 10 20 30 40 50 60 70 80 90 100

CU 04
EA 0120F1

DISREGARD PRINTS BEARING EARLIER REVISION DATES

REVISION DATES (PRELIMINARY STAGE ONLY)

SHEET K122A OF 209

Jan 6, 2012

USERNAME => fsamson DATE PLOTTED => 1/5/2012 TIME PLOTTED => 5:20:05 PM

FILE => P:\4141-06\CADD\TS\Checked Plans\YBITS #1-100% No. 2_03-03-08 (Final Renamed)\010612 Hinge K SAS T19 CCO\04-0120f1-34-006r1-n-hingedt05.dgn

DIST.	COUNTY	ROUTE	KILOMETER POST TOTAL PROJECT	SHEET NO.	TOTAL SHEETS
04	SF	80	12.7/13.2	K672A	806

Caltrans Metric

REGISTERED ENGINEER - CIVIL
01/20/2012
PLANS APPROVAL DATE

REGISTERED PROFESSIONAL ENGINEER A.L. ELY No. 18880 Exp. 6-30-13 CIVIL STATE OF CALIFORNIA

The State of California or its officers or agents shall not be responsible for the accuracy or completeness of electronic copies of this plan sheet.

T.Y. LIN / MOFFATT & NICHOL
TWO HARRISON STREET
SAN FRANCISCO, CA 94105

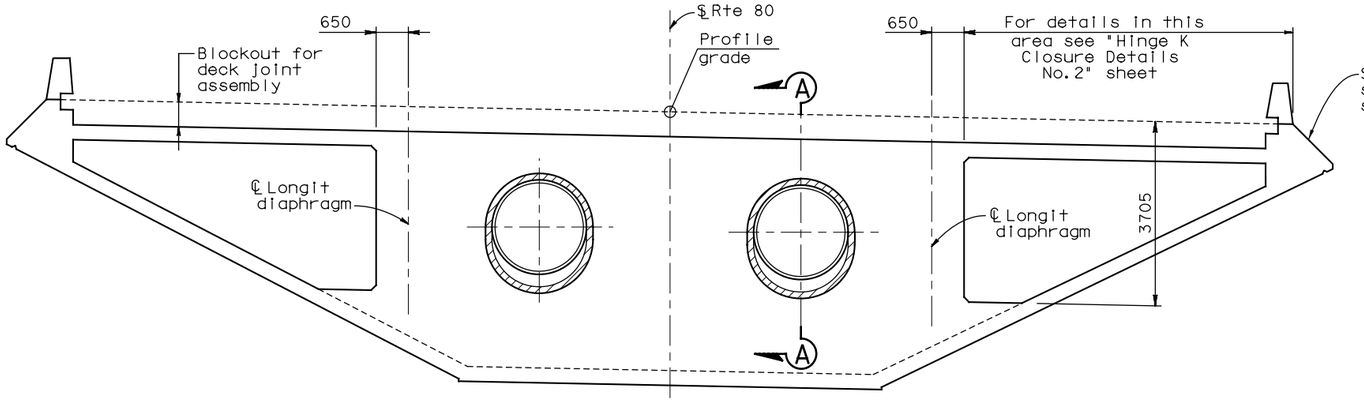

ELEVATION HINGE K BEARING DIAPHRAGM

(WB Structure shown, EB Structure similar except as noted)

1:60

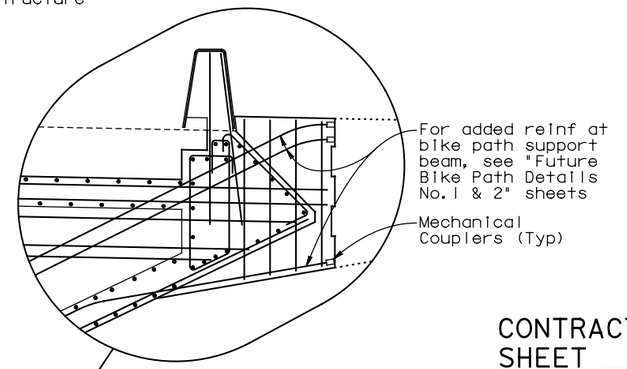

SOUTH EDGE AT EB STRUCTURE

SUPPLEMENTAL SHEET

CONTRACT CHANGE ORDER NO. _____
SHEET ____ OF ____

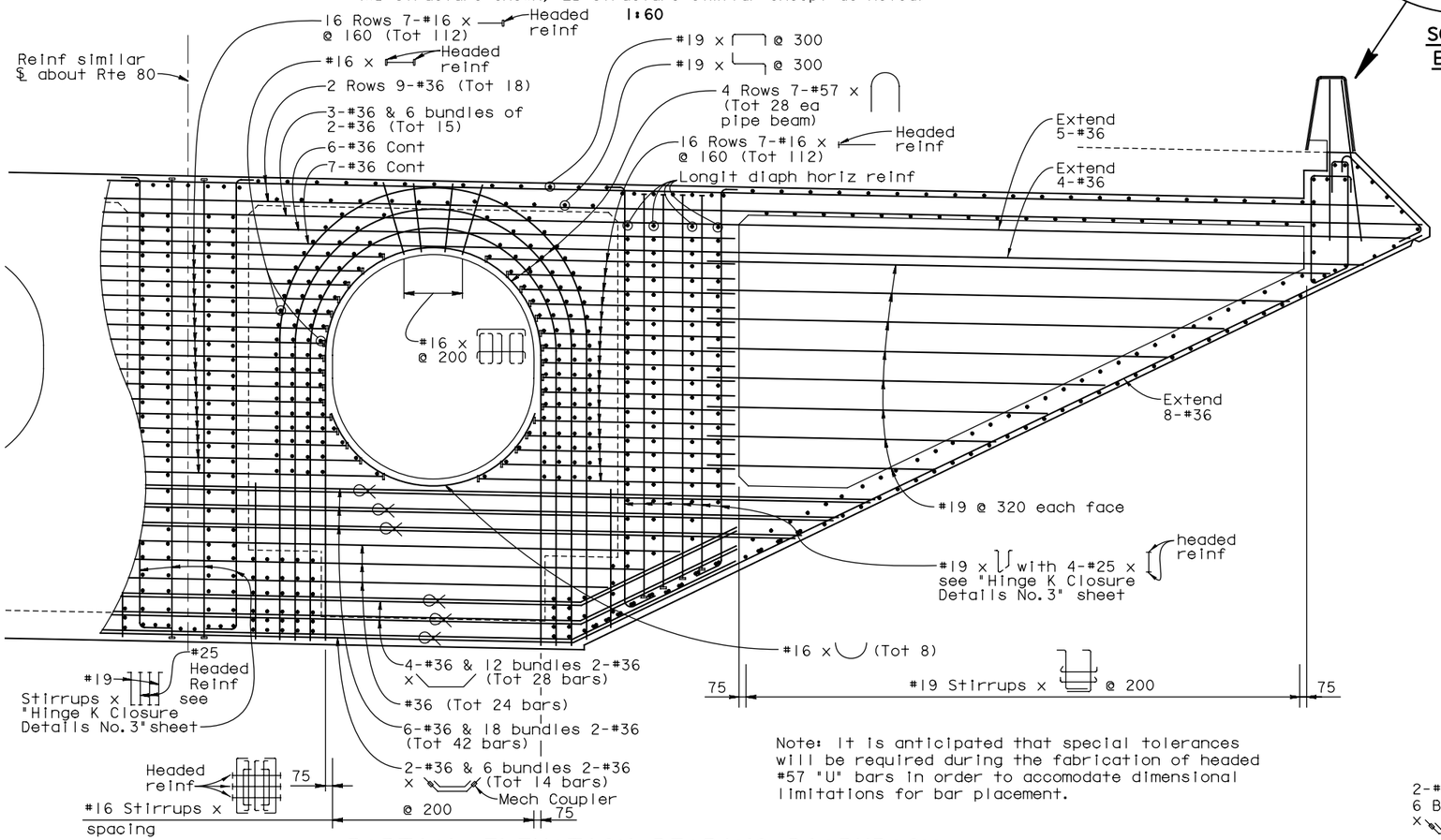

Note: It is anticipated that special tolerances will be required during the fabrication of headed #57 "U" bars in order to accomodate dimensional limitations for bar placement.

PARTIAL ELEVATION BEARING DIAPHRAGM

1:30

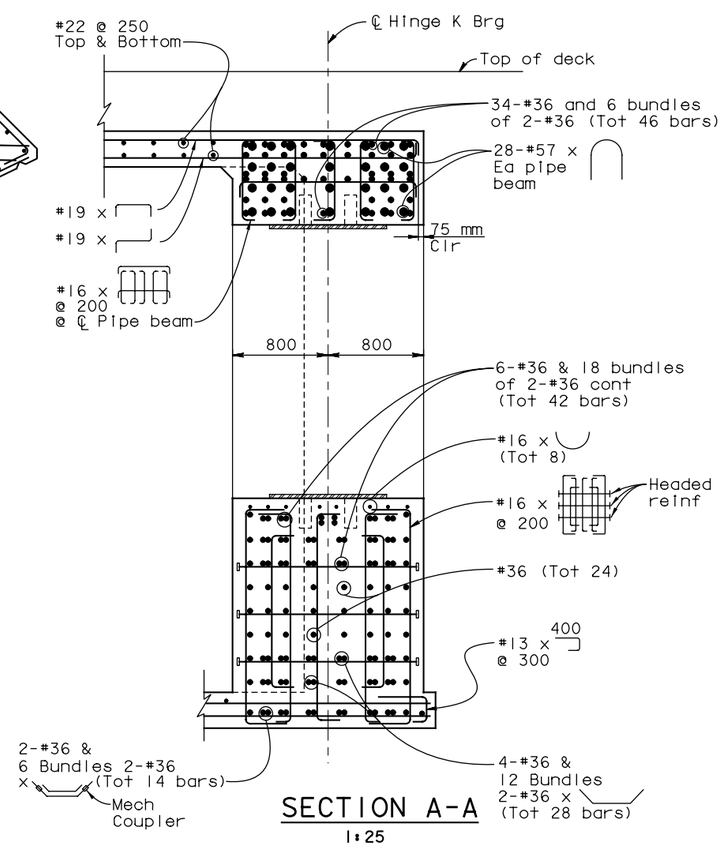

SECTION A-A

1:25

ALL DIMENSIONS ARE IN MILLIMETERS UNLESS OTHERWISE SHOWN

SAN FRANCISCO OAKLAND BAY BRIDGE
EAST SPAN SEISMIC SAFETY PROJECT

YBI TRANSITION STRUCTURES - HINGE K

HINGE K CLOSURE DETAILS NO. 6

DESIGN OVERSIGHT ADE AKINSANYA	DESIGN	BY Lee	CHECKED Wang
SIGN OFF DATE	DETAILS	BY van Ryn/Zucchi/Mai	CHECKED Jain
Rev. Date: 5-18-98	QUANTITIES	BY Liao	CHECKED E. Nichol

PREPARED FOR THE STATE OF CALIFORNIA DEPARTMENT OF TRANSPORTATION

Jal Birdy
PROJECT ENGINEER

BRIDGE NO. 34-0006 L/R
KILOMETER POST 12.8

CU 04
EA 0120F1

DISREGARD PRINTS BEARING EARLIER REVISION DATES

REVISION DATES (PRELIMINARY STAGE ONLY)

SHEET K123A OF 209

ORIGINAL SCALE IN MILLIMETERS FOR REDUCED PLANS 0 10 20 30 40 50 60 70 80 90 100

FILE => P:\4141-06\CADD\TS\Checked Plans\YBITS #1-100% No. 2_03-03-08 (Final Renamed)\010612 Hinge K SAS T19 CCO\04-0120f1-34-006r1-n-hingedt06.dgn

USERNAME => fsamson DATE PLOTTED => 1/5/2012 TIME PLOTTED => 5:20:14 PM

Jan 6, 2012

DIST.	COUNTY	ROUTE	KILOMETER POST TOTAL PROJECT	SHEET NO.	TOTAL SHEETS
04	SF	80	12.7/13.2	K673A	806

Caltrans Metric

REGISTERED ENGINEER - CIVIL
01/20/2012
PLANS APPROVAL DATE

REGISTERED PROFESSIONAL ENGINEER A.L. ELY No. 18880 Exp. 6-30-13 CIVIL STATE OF CALIFORNIA

The State of California or its officers or agents shall not be responsible for the accuracy or completeness of electronic copies of this plan sheet.

T.Y. LIN / MOFFATT & NICHOL
TWO HARRISON STREET
SAN FRANCISCO, CA 94105

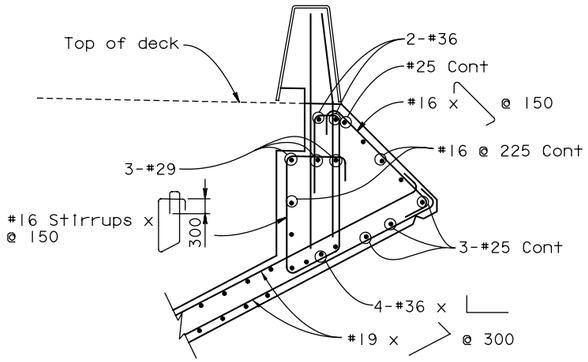

EDGE OF DECK DETAIL EAST OF HINGE K BEARING DIAPHRAGM

1:25

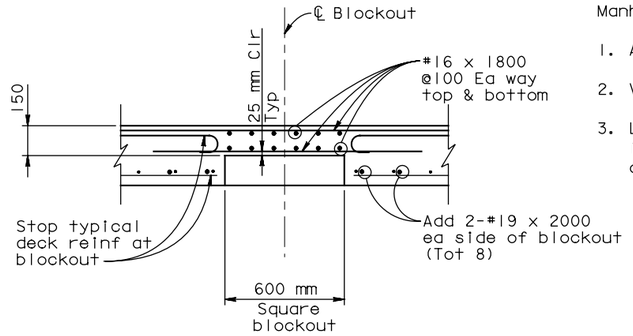

PARTIAL DEPTH DECK BLOCKOUT DETAIL

(For location see "Hinge K Closure Details No.1" sheet)

1:15

Manhole Ladder Notes:

1. All metal, including fasteners, shall be galvanized.
2. Verify all dimensions in the field prior to fabrication.
3. Ladders shall be provided for all deck access openings. In Westbound and Eastbound structures at Hinge K closure.

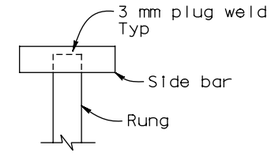

DETAIL 1

1:2

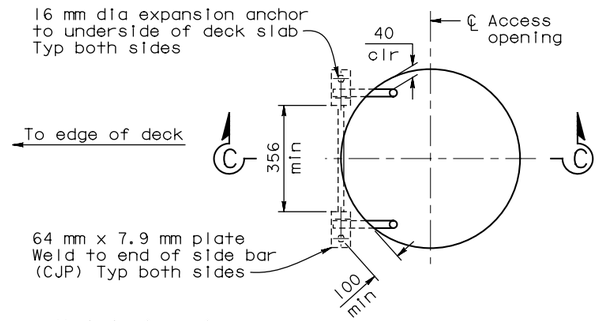

PLAN

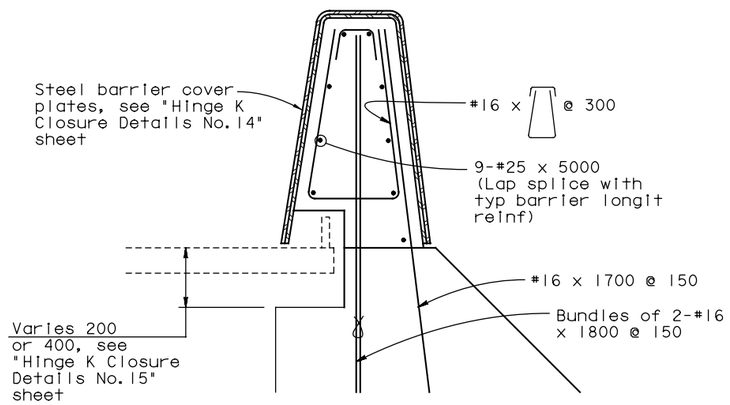

BARRIER DETAIL AT BLOCKOUT FOR EXPANSION JOINT ASSEMBLY

1:10

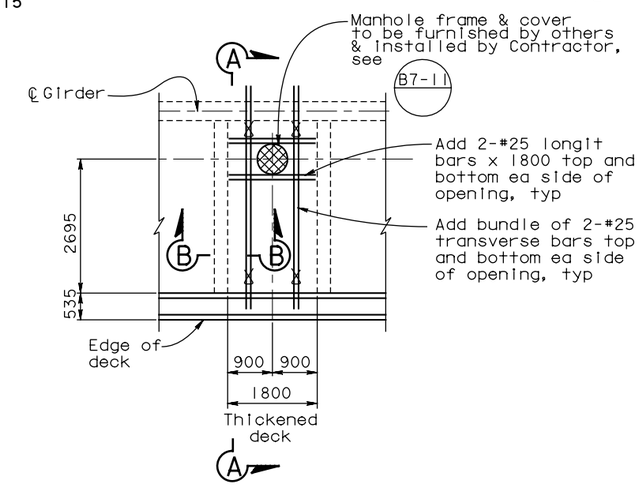

PLAN AT DECK ACCESS MANHOLES

(4 Req'd)

1:60

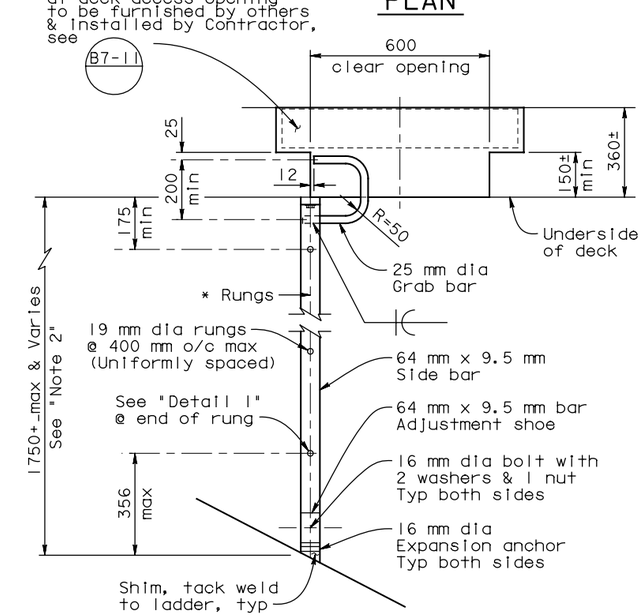

SECTION C-C

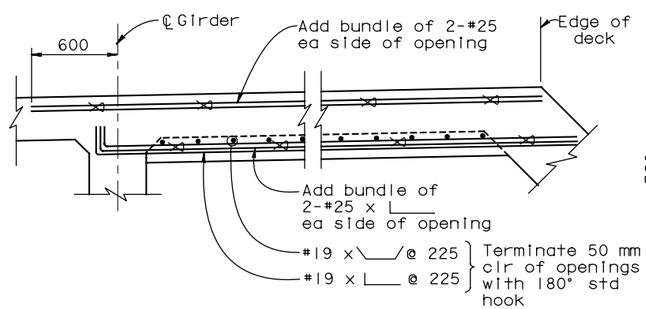

SECTION A-A

NO SCALE

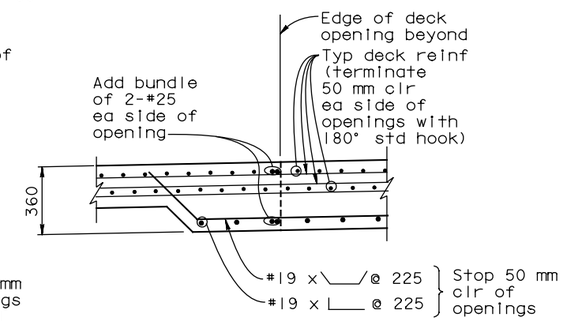

SECTION B-B

NO SCALE

TYPICAL LADDER DETAILS AT DECK ACCESS OPENINGS

1:10

SUPPLEMENTAL SHEET

CONTRACT CHANGE ORDER NO. _____
SHEET ____ OF ____

ALL DIMENSIONS ARE IN MILLIMETERS UNLESS OTHERWISE SHOWN

DESIGN	BY Lee	CHECKED Wang	
DETAILS	BY van Ryn/Zucchi/Mai	CHECKED Jain	
QUANTITIES	BY Liao	CHECKED E. Nichol	

DESIGN OVERSIGHT ADE AKINSANYA
SIGN OFF DATE
Rev. Date: 5-18-98

PREPARED FOR THE STATE OF CALIFORNIA DEPARTMENT OF TRANSPORTATION

Jal Birdy
PROJECT ENGINEER

BRIDGE NO. 34-0006 L/R
KILOMETER POST 12.8

SAN FRANCISCO OAKLAND BAY BRIDGE
EAST SPAN SEISMIC SAFETY PROJECT

YBI TRANSITION STRUCTURES - HINGE K

HINGE K CLOSURE DETAILS NO.7

ORIGINAL SCALE IN MILLIMETERS FOR REDUCED PLANS 0 10 20 30 40 50 60 70 80 90 100

CU 04
EA 0120F1

DISREGARD PRINTS BEARING EARLIER REVISION DATES

REVISION DATES (PRELIMINARY STAGE ONLY)

SHEET K124A OF 209

DIST.	COUNTY	ROUTE	KILOMETER POST TOTAL PROJECT	SHEET NO.	TOTAL SHEETS
04	SF	80	12.7/13.2	K673AA	806

Caltrans Metric

REGISTERED ENGINEER - CIVIL
01/20/2012
PLANS APPROVAL DATE

REGISTERED PROFESSIONAL ENGINEER A.L. ELY No. 18880 Exp. 6-30-13 CIVIL STATE OF CALIFORNIA

The State of California or its officers or agents shall not be responsible for the accuracy or completeness of electronic copies of this plan sheet.

T.Y. LIN / MOFFATT & NICHOL
TWO HARRISON STREET
SAN FRANCISCO, CA 94105

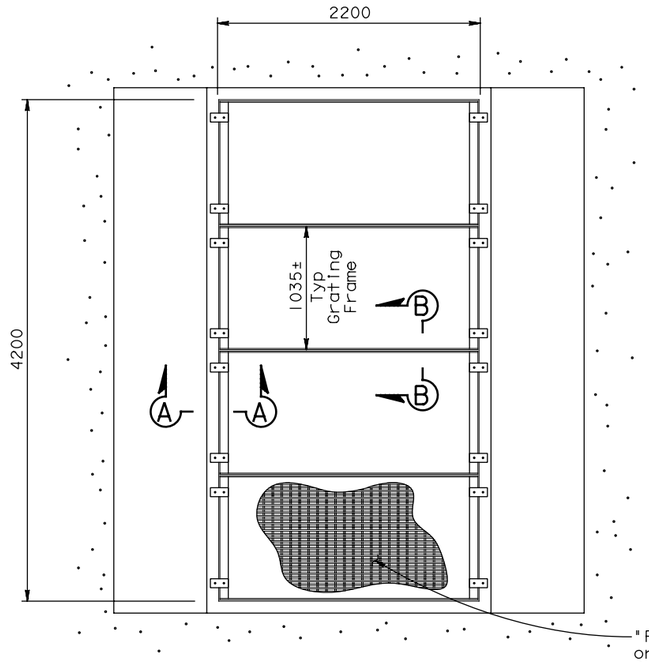

PLAN AT SOFFIT OPENING
1:25

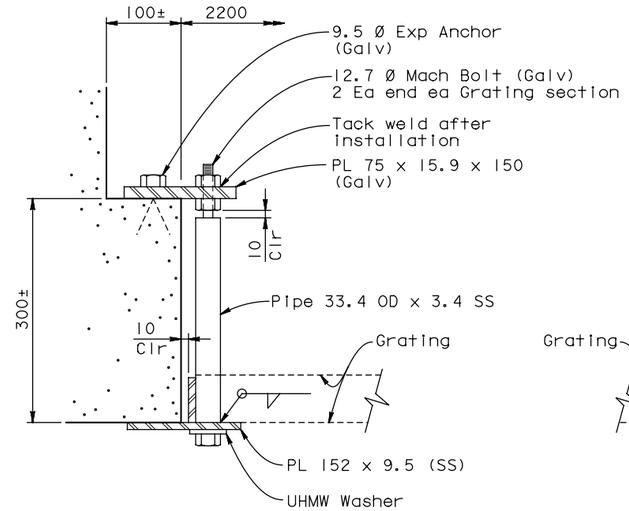

SECTION A-A
1:4

Grating Design (Service) Loads:

Live Load - 4788 Pa
Wind (Uplift) - 3830 Pa

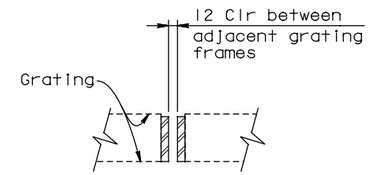

SECTION B-B
1:4

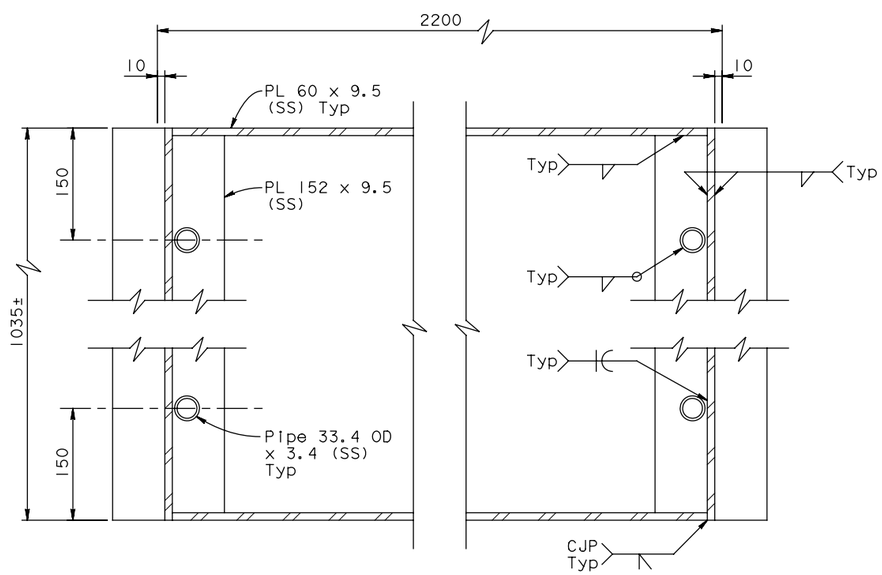

PLAN - GRATING FRAME
1:4

Note: Welding to stainless steel shall be in accordance with AWS D1.6-1999.

ALL DIMENSIONS ARE IN MILLIMETERS UNLESS OTHERWISE SHOWN

SUPPLEMENTAL SHEET

CONTRACT CHANGE ORDER NO. _____
SHEET ____ OF ____

SAN FRANCISCO OAKLAND BAY BRIDGE
EAST SPAN SEISMIC SAFETY PROJECT

YBI TRANSITION STRUCTURES - HINGE K

HINGE K CLOSURE DETAILS NO. 7A

DESIGN OVERSIGHT
ADE AKINSANYA
SIGN OFF DATE

	BY	CHECKED
DESIGN	Lee	Birdy
DETAILS	Samson	Ely
QUANTITIES	Fellows	Birdy

PREPARED FOR THE STATE OF CALIFORNIA DEPARTMENT OF TRANSPORTATION

Jal Birdy
PROJECT ENGINEER

BRIDGE NO. 34-0006 L/R
KILOMETER POST 12.8

CU 04
EA 0120F1

DISREGARD PRINTS BEARING EARLIER REVISION DATES

REVISION DATES (PRELIMINARY STAGE ONLY)

SHEET K124AA OF 209

Rev. Date: 5-18-98

ORIGINAL SCALE IN MILLIMETERS FOR REDUCED PLANS 0 10 20 30 40 50 60 70 80 90 100

FILE => P:\4141-06\CADD\TS\Checked Plans\YBITS #1-100% No. 2_03-03-08 (Final Renamed)\010612 Hinge K SAS T19 CCO\04-0120f1-34-006r1-n-hingedt07a.dgn

Jan 6, 2012

USERNAME => fsamson DATE PLOTTED => 1/5/2012 TIME PLOTTED => 5:20:33 PM

SUPPLEMENTAL SHEET

CONTRACT CHANGE ORDER NO. ____
SHEET ___ OF ___

DIST.	COUNTY	ROUTE	KILOMETER POST TOTAL PROJECT	SHEET NO.	TOTAL SHEETS
04	SF	80	12.7/13.2	K674A	806

REGISTERED ENGINEER - CIVIL
01/20/2012
PLANS APPROVAL DATE
REGISTERED PROFESSIONAL ENGINEER A.L. ELY No. 18880 Exp. 6-30-13 CIVIL STATE OF CALIFORNIA
The State of California or its officers or agents shall not be responsible for the accuracy or completeness of electronic copies of this plan sheet.

T.Y. LIN / MOFFATT & NICHOL
TWO HARRISON STREET
SAN FRANCISCO, CA 94105

DIST.	COUNTY	ROUTE	KILOMETER POST TOTAL PROJECT	SHEET NO.	TOTAL SHEETS
04	SF	80	13.2/13.9	846	1204

REGISTERED ENGINEER - CIVIL
12-6-04
PLANS APPROVAL DATE
REGISTERED PROFESSIONAL ENGINEER Marwan N. Nader No. C 054426 Exp. 12/31/05 CIVIL STATE OF CALIFORNIA
The State of California or its officers or agents shall not be responsible for the accuracy or completeness of electronic copies of this plan sheet.

T.Y. LIN / MOFFATT & NICHOL
825 BATTERY STREET
SAN FRANCISCO, CA 94111

Caltrans now has a web site! To get to the web site, go to: http://www.dot.ca.gov

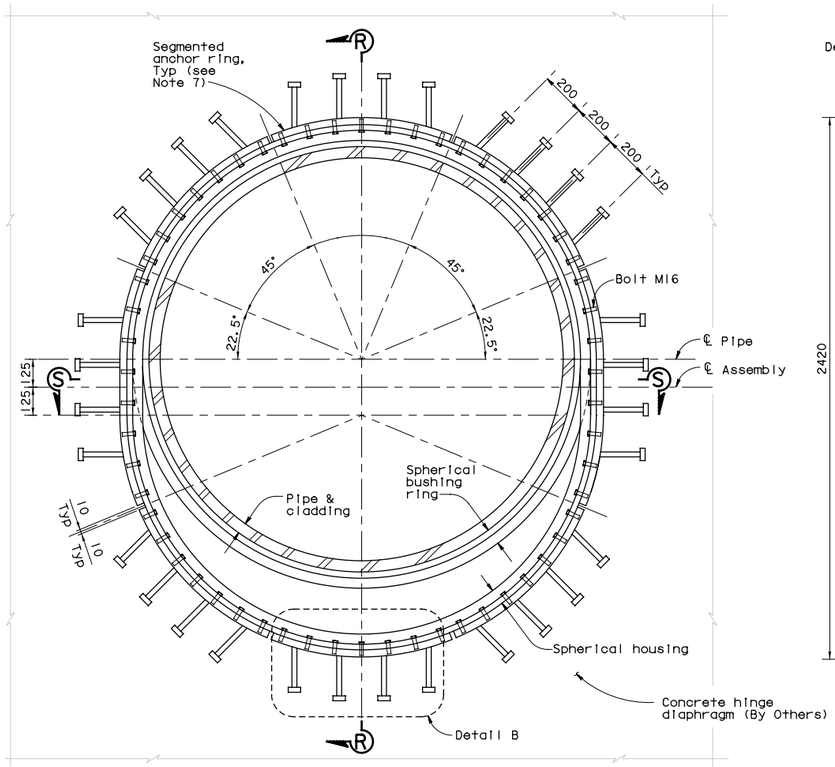

SECTION N-N
1:10

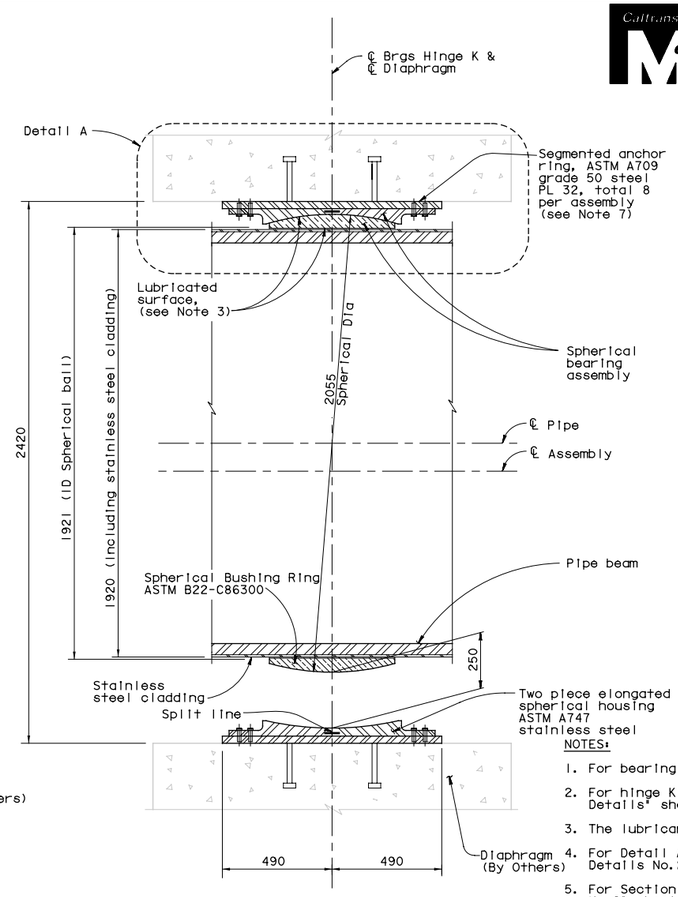

SECTION R-R
1:10

NOTES:

1. For bearing locations, see 'Hinge K Layout' sheets.
2. For hinge K additional details, see 'Hinge K Details' sheets.
3. The lubricant shall be self lubricated.
4. For Detail A and Detail B, see 'Hinge K Bearing Details No.2' sheet.
5. For Section S-S, see 'Hinge K Bearing Details No.2' sheet.
6. Hinge K Bearing assembly is shown in its erected final position for information only. The Contractor shall furnish Hinge K bearing assembly. Erection of Hinge K bearing by Others. Hinge K bearing Assembly Consists of Spherical bushing ring, lubricated surfaces, Spherical bearing assembly, two piece elongated spherical housing, segmented anchor ring and all connection and assembly bolts, pins and studs.
7. The Contractor may propose an alternate arrangement of the segmented anchor ring subject to the review and approval of the Engineer.

100% PS&E

ALL DIMENSIONS ARE IN MILLIMETERS UNLESS OTHERWISE SHOWN

R. Valizadeh/V. Toan/Y.L./W.L./F.C.
DESIGN OVERSIGHT
Ron Valizadeh / Vinod Toan / Y. Liu
SIGN OFF DATE 04/19/04
Rev. Date: 5-18-98

	BY	CHECKED
DESIGN	M. Nader	J. Krizek
DETAILS	C. Mibelli	N. Vo
QUANTITIES	C. Mibelli	N. Vo

PREPARED FOR THE STATE OF CALIFORNIA DEPARTMENT OF TRANSPORTATION

R. Manzanarez
PROJECT ENGINEER

BRIDGE NO. 34-0006L/R
KILOMETER POST 13.2/13.9

SAN FRANCISCO OAKLAND BAY BRIDGE
EAST SPAN SEISMIC SAFETY PROJECT
SELF-ANCHORED SUSPENSION BRIDGE
(SUPERSTRUCTURE & TOWER)

HINGE K BEARING DETAILS NO. 1

ORIGINAL SCALE IN MILLIMETERS FOR REDUCED PLANS 0 10 20 30 40 50 60 70 80 90 100
CU 04
EA 0120F1
DISREGARD PRINTS BEARING EARLIER REVISION DATES 04/20/04 01/20/04 12/13/02
REVISION DATES (PRELIMINARY STAGE ONLY)
SHEET 429 OF

DESIGN OVERSIGHT
ADE AKINSANYA
SIGN OFF DATE
Rev. Date: 5-18-98

	BY	CHECKED
DESIGN	NA	NA
DETAILS	van Ryn/Zucchi/Mai	Jain
QUANTITIES	Liao	E. Nichol

PREPARED FOR THE STATE OF CALIFORNIA DEPARTMENT OF TRANSPORTATION

Jal Birdy
PROJECT ENGINEER

BRIDGE NO. 34-0006 L/R
KILOMETER POST 12.8

SAN FRANCISCO OAKLAND BAY BRIDGE
EAST SPAN SEISMIC SAFETY PROJECT

YBI TRANSITION STRUCTURES - HINGE K

HINGE K CLOSURE DETAILS NO. 8

ORIGINAL SCALE IN MILLIMETERS FOR REDUCED PLANS 0 10 20 30 40 50 60 70 80 90 100
CU 04
EA 0120F1
DISREGARD PRINTS BEARING EARLIER REVISION DATES
REVISION DATES (PRELIMINARY STAGE ONLY)
SHEET K125A OF 209

NOTES:

1. The drawing provided hereon is reproduced from the contract plans of the adjacent Self-Anchored Suspension Bridge contract.
2. Hinge K Bearing assembly will be furnished by others, the YBI Structures Contractor shall erect the bearing assembly in its final position. Hinge K bearing assembly consists of spherical bushing ring, lubricated surfaces, spherical bearing assembly, two piece elongated spherical housing, segmented anchor ring and all connection and assembly bolts, pins, and studs.

SUPPLEMENTAL SHEET

CONTRACT CHANGE ORDER NO. ____
SHEET ___ OF ___

DIST.	COUNTY	ROUTE	KILOMETER POST TOTAL PROJECT	SHEET NO.	TOTAL SHEETS
04	SF	80	12.7/13.2	K675A	806

REGISTERED ENGINEER - CIVIL
01/20/2012
PLANS APPROVAL DATE
The State of California or its officers or agents shall not be responsible for the accuracy or completeness of electronic copies of this plan sheet.
REGISTERED PROFESSIONAL ENGINEER A.L. ELY No. 18880 Exp. 6-30-13 CIVIL STATE OF CALIFORNIA

T.Y. LIN / MOFFATT & NICHOL
TWO HARRISON STREET
SAN FRANCISCO, CA 94105

5

DIST.	COUNTY	ROUTE	KILOMETER POST TOTAL PROJECT	SHEET NO.	TOTAL SHEETS
04	SF	80	13.2/13.9	847C	1204

REGISTERED ENGINEER - CIVIL
12-6-04
PLANS APPROVAL DATE
The State of California or its officers or agents shall not be responsible for the accuracy or completeness of electronic copies of this plan sheet.
REGISTERED PROFESSIONAL ENGINEER Marwan N. Nader No. C 054426 Exp. 12/31/05 CIVIL STATE OF CALIFORNIA

T.Y. LIN / MOFFATT & NICHOL
825 BATTERY STREET
SAN FRANCISCO, CA 94111

Caltrans now has a web site! To get to the web site, go to: http://www.dot.ca.gov

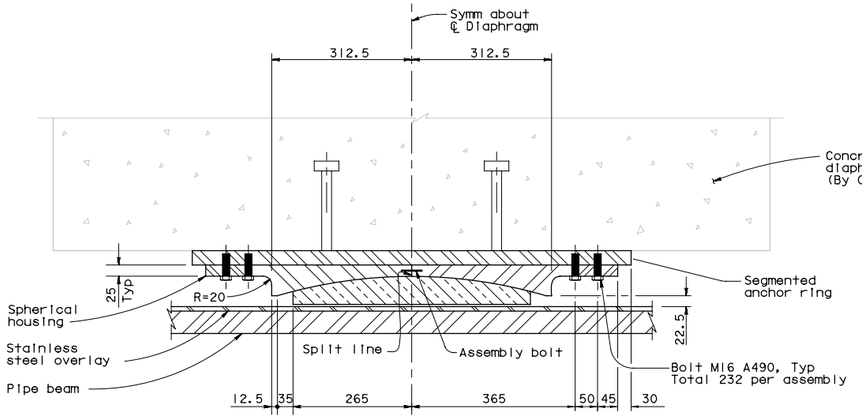

DETAIL A
1:5

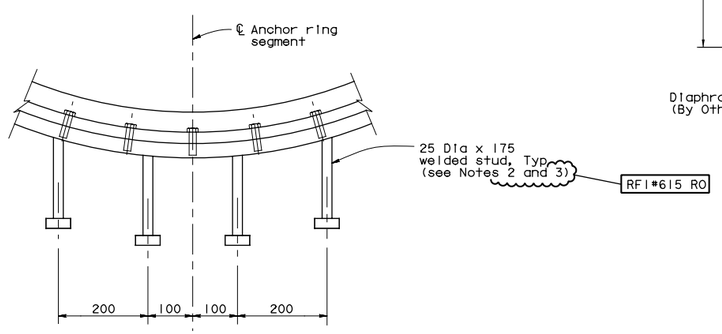

DETAIL B
1:5

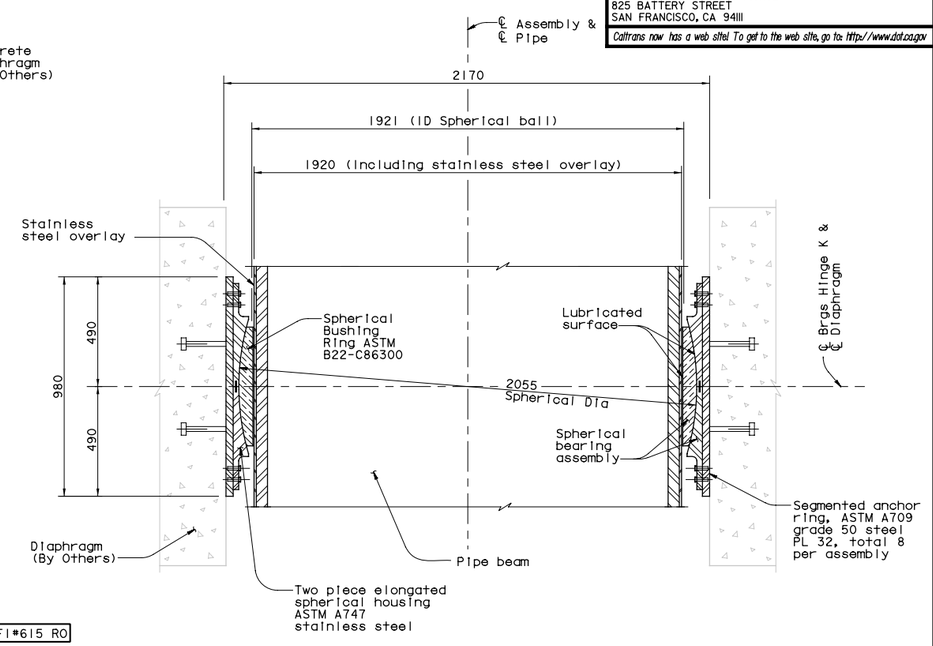

SECTION S-S
1:10
(see Note 1)

NOTES:

1. For other details, see Section R-R in 'Hinge K Bearing Details No.1' sheet.
2. At the Contractor's option, welded studs may be installed radially.
3. At the Contractor's option, longer studs up to 210 mm may be used. RFI#615 R0

100% PS&E

5 REVISED PER ADDENDUM NO. 5 DATED DECEMBER 21, 2005

ALL DIMENSIONS ARE IN MILLIMETERS UNLESS OTHERWISE SHOWN

R. Valizadeh/V. Toan/Y. L./W. L./F. C.
DESIGN OVERSIGHT
Y. Liu
SIGN OFF DATE 12/07/05
Rev. Date: 5-18-98

	BY	CHECKED
DESIGN	M. Nader	J. Krizek
DETAILS	C. Mibelli	N. Vo
QUANTITIES	C. Mibelli	N. Vo

PREPARED FOR THE STATE OF CALIFORNIA DEPARTMENT OF TRANSPORTATION

R. Manzanarez
PROJECT ENGINEER

CU 04
EA 0120F1

BRIDGE NO. 34-0006L/R
KILOMETER POST 13.2/13.9

SAN FRANCISCO OAKLAND BAY BRIDGE
EAST SPAN SEISMIC SAFETY PROJECT
SELF-ANCHORED SUSPENSION BRIDGE
(SUPERSTRUCTURE & TOWER)
HINGE K BEARING DETAILS NO. 2

ORIGINAL SCALE IN MILLIMETERS FOR REDUCED PLANS 0 10 20 30 40 50 60 70 80 90 100

DISREGARD PRINTS BEARING EARLIER REVISION DATES 05/08/02 07/30/02 12/06/02 12/07/05

SHEET 430C OF

NOTES:

1. The drawing provided hereon is reproduced from the contract plans of the adjacent Self-Anchored Suspension Bridge contract.

DESIGN OVERSIGHT
ADE AKINSANYA
SIGN OFF DATE
Rev. Date: 5-18-98

	BY	CHECKED
DESIGN	NA	NA
DETAILS	van Ryn/Zucchi/Mai	Jain
QUANTITIES	Liao	E. Nichol

PREPARED FOR THE STATE OF CALIFORNIA DEPARTMENT OF TRANSPORTATION

Jal Birdy
PROJECT ENGINEER

CU 04
EA 0120F1

BRIDGE NO. 34-0006 L/R
KILOMETER POST 12.8

SAN FRANCISCO OAKLAND BAY BRIDGE
EAST SPAN SEISMIC SAFETY PROJECT
YBI TRANSITION STRUCTURES - HINGE K
HINGE K CLOSURE DETAILS NO. 9

ORIGINAL SCALE IN MILLIMETERS FOR REDUCED PLANS 0 10 20 30 40 50 60 70 80 90 100

DISREGARD PRINTS BEARING EARLIER REVISION DATES

SHEET K126A OF 209

DIST.	COUNTY	ROUTE	KILOMETER POST TOTAL PROJECT	SHEET NO.	TOTAL SHEETS
04	SF	80	12.7/13.2	K676A	806

REGISTERED ENGINEER - CIVIL
01/20/2012
PLANS APPROVAL DATE
REGISTERED PROFESSIONAL ENGINEER A.L. ELY No. 18880 Exp. 6-30-13 CIVIL STATE OF CALIFORNIA
The State of California or its officers or agents shall not be responsible for the accuracy or completeness of electronic copies of this plan sheet.

T.Y. LIN / MOFFATT & NICHOL
TWO HARRISON STREET
SAN FRANCISCO, CA 94105

SUPPLEMENTAL SHEET

CONTRACT CHANGE ORDER NO. ____
SHEET ___ OF ___

Caltrans Metric

DIST.	COUNTY	ROUTE	KILOMETER POST TOTAL PROJECT	SHEET NO.	TOTAL SHEETS
04	SF	80	13.2/13.9	848	1204

REGISTERED ENGINEER - CIVIL
12-6-04
PLANS APPROVAL DATE
REGISTERED PROFESSIONAL ENGINEER Marwan N. Nader No. C 054426 Exp. 12/31/05 CIVIL STATE OF CALIFORNIA
The State of California or its officers or agents shall not be responsible for the accuracy or completeness of electronic copies of this plan sheet.

T.Y. LIN / MOFFATT & NICHOL
825 BATTERY STREET
SAN FRANCISCO, CA 94111

Caltrans now has a web site! To get to the web site, go to: http://www.dot.ca.gov

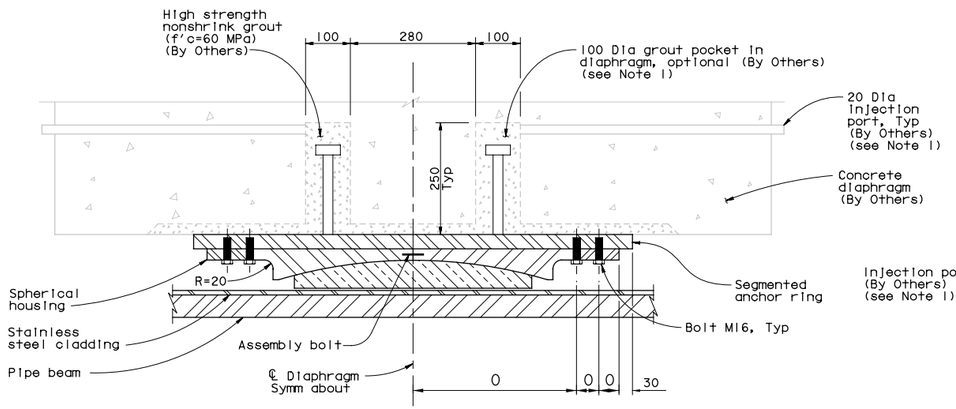

DETAIL A
1:5

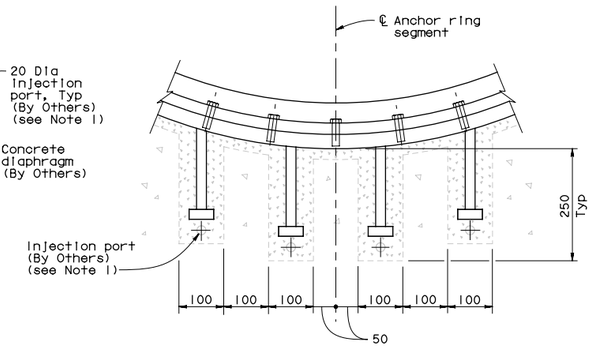

DETAIL B
1:5

GROUTED POCKET ALTERNATIVE FOR PLACEMENT OF BEARING

HINGE K BEARING DESIGN VALUES

Hinge	Support Type	Design Load (KN per pipe beam)		Design Rotation (radians)		Uplift-Inside bearing gap (mm)	Longitudinal Movement (mm)	
		Service	Ultimate	Service	Ultimate		Service	Ultimate
KW, KE	Sliding	10100	56250	0.001	0.0130	250	134	1000 (closing) 1300 (opening)

* Design value for shear given corresponds to maximum shear capacity of fuse pipe beam. It can occur in any direction.

NOTES:

1. Grouted pockets with injection ports are an acceptable alternative to insure that the bearings are aligned and installed within the specified tolerances (by Others).

100% PS&E

ALL DIMENSIONS ARE IN MILLIMETERS UNLESS OTHERWISE SHOWN

R. Valizadeh/V. Toan/Y.L./W.L./F.C.
DESIGN OVERSIGHT
Y. Liu
SIGN OFF DATE 12/19/02
Rev. Date: 5-18-98

DESIGN	BY M. Nader	CHECKED J. Krizek	
DETAILS	BY C. Mibelli	CHECKED N. Vo	
QUANTITIES	BY C. Mibelli	CHECKED N. Vo	

PREPARED FOR THE STATE OF CALIFORNIA DEPARTMENT OF TRANSPORTATION

R. Manzanarez
PROJECT ENGINEER

BRIDGE NO. 34-0006L/R
KILOMETER POST 13.2/13.9

SAN FRANCISCO OAKLAND BAY BRIDGE
EAST SPAN SEISMIC SAFETY PROJECT
SELF-ANCHORED SUSPENSION BRIDGE
(SUPERSTRUCTURE & TOWER)
HINGE K BEARING DETAILS NO. 3

ORIGINAL SCALE IN MILLIMETERS FOR REDUCED PLANS 0 10 20 30 40 50 60 70 80 90 100
CU 04
EA 0120F1
DISREGARD PRINTS BEARING EARLIER REVISION DATES
REVISION DATES (PRELIMINARY STAGE ONLY) 04/08/02 07/26/02 12/19/02
SHEET 431 OF

DESIGN OVERSIGHT
ADE AKINSANYA
SIGN OFF DATE
Rev. Date: 5-18-98

DESIGN	BY NA	CHECKED NA	
DETAILS	BY van Ryn/Zucchi/Mai	CHECKED Jain	
QUANTITIES	BY Liao	CHECKED E. Nichol	

PREPARED FOR THE STATE OF CALIFORNIA DEPARTMENT OF TRANSPORTATION

Jal Birdy
PROJECT ENGINEER

BRIDGE NO. 34-0006 L/R
KILOMETER POST 12.8

SAN FRANCISCO OAKLAND BAY BRIDGE
EAST SPAN SEISMIC SAFETY PROJECT
YBI TRANSITION STRUCTURES - HINGE K
HINGE K CLOSURE DETAILS NO. 10

ORIGINAL SCALE IN MILLIMETERS FOR REDUCED PLANS 0 10 20 30 40 50 60 70 80 90 100
CU 04
EA 0120F1
DISREGARD PRINTS BEARING EARLIER REVISION DATES
REVISION DATES (PRELIMINARY STAGE ONLY)
SHEET K127A OF 209

SUPPLEMENTAL SHEET

CONTRACT CHANGE ORDER NO. ____
SHEET ___ OF ___

DIST.	COUNTY	ROUTE	KILOMETER POST TOTAL PROJECT	SHEET NO.	TOTAL SHEETS
04	SF	80	12.7/13.2	K677A	806

REGISTERED ENGINEER - CIVIL
01/20/2012
PLANS APPROVAL DATE
The State of California or its officers or agents shall not be responsible for the accuracy or completeness of electronic copies of this plan sheet.
REGISTERED PROFESSIONAL ENGINEER A.L. ELY No. 18880 Exp. 6-30-13 CIVIL STATE OF CALIFORNIA

T.Y. LIN / MOFFATT & NICHOL
TWO HARRISON STREET
SAN FRANCISCO, CA 94105

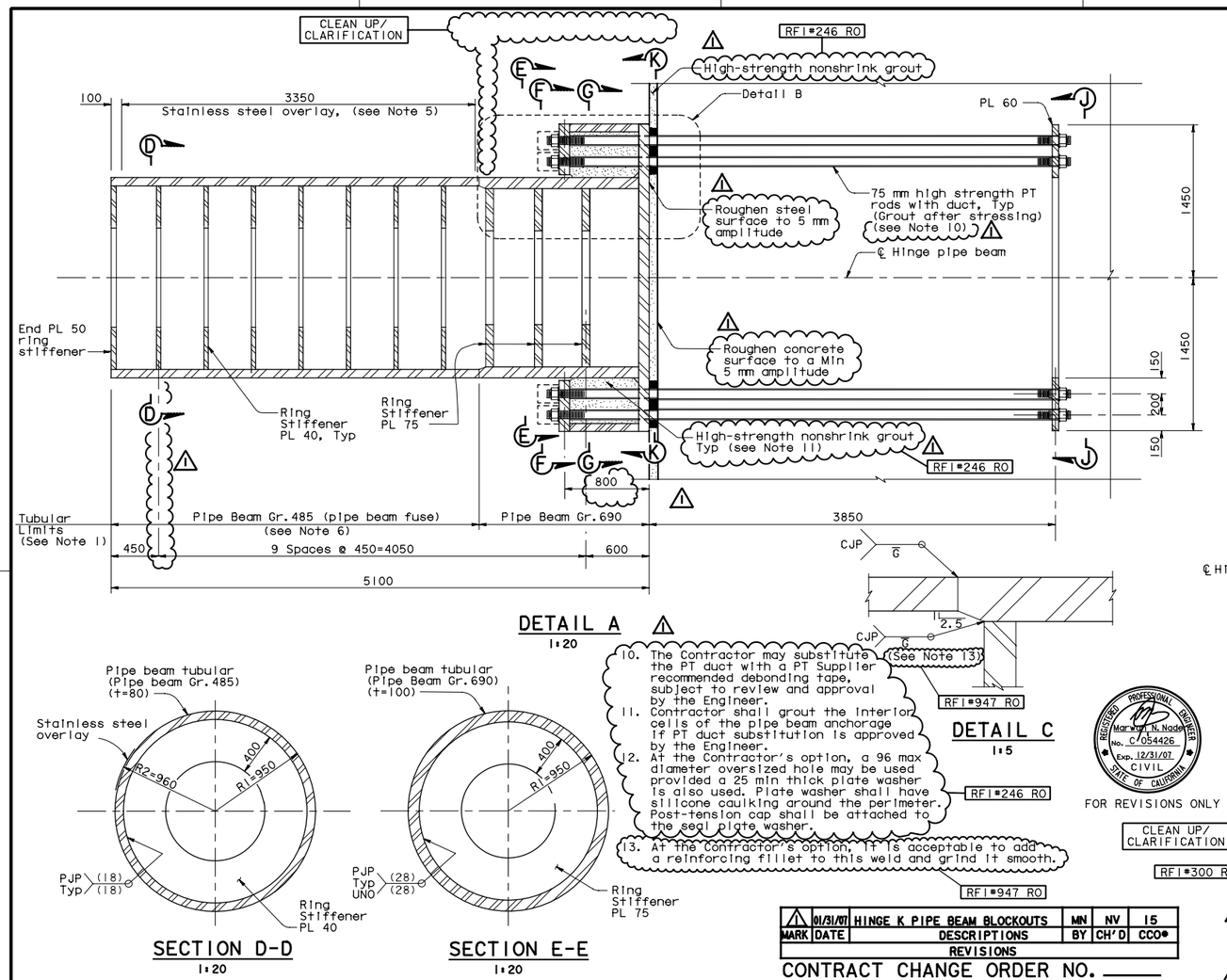

DETAIL A
1:20

DETAIL C
1:5

SECTION D-D
1:20

SECTION E-E
1:20

10. The Contractor may substitute the PT duct with a PT Supplier recommended debonding tape, subject to review and approval by the Engineer.
11. Contractor shall grout the interior cells of the pipe beam anchorage if PT duct substitution is approved by the Engineer.
12. At the Contractor's option, a 96 max diameter oversized hole may be used provided a 25 min thick plate washer is also used. Plate washer shall have silicone caulking around the perimeter. Post-tension cap shall be attached to the seal plate washer. RFI#246 RO
13. At the Contractor's option, it is acceptable to add a reinforcing fillet to this weld and grind it smooth. RFI#947 RO

MARK	DATE	DESCRIPTIONS	BY	CH'D	CCO#
1	01/31/07	HINGE K PIPE BEAM BLOCKOUTS	MN	NV	15

REVISIONS

CONTRACT CHANGE ORDER NO. ____
SHEET ___ OF ___

5 REVISED PER ADDENDUM NO. 5 DATED DECEMBER 21, 2005

DIST.	COUNTY	ROUTE	KILOMETER POST TOTAL PROJECT	SHEET NO.	TOTAL SHEETS
04	SF	80	13.2/13.9	844RIC	1204

REGISTERED ENGINEER - CIVIL
12-6-04
PLANS APPROVAL DATE
The State of California or its officers or agents shall not be responsible for the accuracy or completeness of electronic copies of this plan sheet.
REGISTERED PROFESSIONAL ENGINEER John Sun No. C 54648 Exp. 12/31/05 CIVIL STATE OF CALIFORNIA

T.Y. LIN / MOFFATT & NICHOL
825 BATTERY STREET
SAN FRANCISCO, CA 94111

Caltrans now has a web site! To get to the web site, go to: http://www.dot.ca.gov

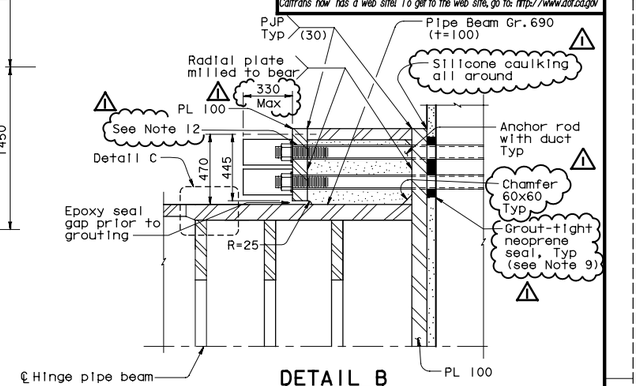

DETAIL B
1:15

NOTES:

1. Pipe Beam tubulars shall be forgings. Hinge beam ring stiffener plate, stiffener plates and anchorage plates shall be pipe beam Gr. 485, UNO.
2. Hinge beam shall be SPCM.
3. For Section F-F through K-K, see 'Hinge K Details No. 2' sheet.
4. Steel hinge beam PT anchor rods are 75 mm high strength PT rods (fu=1030 Mpa) with standard galvanized steel ducts, unless specified otherwise. For additional prestressing details, see 'Prestressing Notes' sheet, and for general stressing sequence, see 'Pier W2 Construction Sequence' sheet.
5. The areas noted as stainless steel overlay shall be 316L weld overlay. The area shall be machine finished to within 1 mm of the 960 theoretical radius with a surface finish of 0.8 μm. The minimum final thickness of the stainless steel overlay shall be 5 mm.
6. Total of 4 spare beam fuses (including stiffeners) for hinges KW and KE shall be fabricated with a minimum overall length of 3513 mm. Spare pipe beams to replace the fuse sections in case of damage due to earthquake in the future (By Others). RFI#300 RO CLEAN UP/ CLARIFICATION
7. Jacking force in the steel hinge beam PT anchor rods (HBI-HB76) shall be 3000 kN typical. RFI#400 RO
8. Welds between interior ring stiffener plates and tubulars may be undermatched by one strength level.
9. Grout-tight neoprene seal shown is schematic. The seal shall prevent any grout from seeping through the PT rod holes in the base plate. Area around the hole perimeter shall be ground smooth to produce a tight seal.

REGISTERED PROFESSIONAL ENGINEER Marwan N. Nader No. C 054426 Exp. 12/31/07 CIVIL STATE OF CALIFORNIA
FOR REVISIONS ONLY

ALL DIMENSIONS ARE IN MILLIMETERS UNLESS OTHERWISE SHOWN

NOTES:

1. The drawing provided hereon is reproduced from the contract plans of the adjacent Self-Anchored Suspension Bridge contract.
2. This drawing provides details of the Hinge K pipe beam and is for reference only, pipe beams to be furnished and erected by others.

100% P&E

R. Vallzadeh/V. Toan/Y.L./W.L./F.C.
DESIGN OVERSIGHT
Ryan Vallzadeh / Vang Toan / Y. Liu
SIGN OFF DATE 01/31/07
Rev. Date: 5-18-98

	BY	CHECKED
DESIGN	J. Sun	C. Redfield
DETAILS	J. Duxbury	M. Chen
QUANTITIES	J. Duxbury	S. Shi

PREPARED FOR THE STATE OF CALIFORNIA DEPARTMENT OF TRANSPORTATION

R. Manzanarez
PROJECT ENGINEER

BRIDGE NO. 34-0006L/R
KILOMETER POST 13.2/13.9

SAN FRANCISCO OAKLAND BAY BRIDGE
EAST SPAN SEISMIC SAFETY PROJECT
SELF-ANCHORED SUSPENSION BRIDGE (SUPERSTRUCTURE & TOWER)
HINGE K DETAILS NO. 1

ORIGINAL SCALE IN MILLIMETERS FOR REDUCED PLANS 0 10 20 30 40 50 60 70 80 90 100
CU 04
EA 0120F1
DISREGARD PRINTS BEARING EARLIER REVISION DATES
REVISION DATES (PRELIMINARY STAGE ONLY) 06/26/99 05/31/06 04/26/06 07/26/06 12/26/06 12/07/06
SHEET 427RIC OF

DESIGN OVERSIGHT
ADE AKINSANYA
SIGN OFF DATE
Rev. Date: 5-18-98

	BY	CHECKED
DESIGN	NA	NA
DETAILS	van Ryn/Zucchi/Mai	Jain
QUANTITIES	Liao	E. Nichol

PREPARED FOR THE STATE OF CALIFORNIA DEPARTMENT OF TRANSPORTATION

Jal Birdy
PROJECT ENGINEER

BRIDGE NO. 34-0006 L/R
KILOMETER POST 12.8

SAN FRANCISCO OAKLAND BAY BRIDGE
EAST SPAN SEISMIC SAFETY PROJECT
YBI TRANSITION STRUCTURES - HINGE K
HINGE K CLOSURE DETAILS NO. 11

ORIGINAL SCALE IN MILLIMETERS FOR REDUCED PLANS 0 10 20 30 40 50 60 70 80 90 100
CU 04
EA 0120F1
DISREGARD PRINTS BEARING EARLIER REVISION DATES
REVISION DATES (PRELIMINARY STAGE ONLY)
SHEET K128A OF 209

SUPPLEMENTAL SHEET

CONTRACT CHANGE ORDER NO. ____
SHEET ____ OF ____

DIST.	COUNTY	ROUTE	KILOMETER POST TOTAL PROJECT	SHEET NO.	TOTAL SHEETS
04	SF	80	12.7/13.2	K678A	806

REGISTERED ENGINEER - CIVIL
01/20/2012
PLANS APPROVAL DATE
The State of California or its officers or agents shall not be responsible for the accuracy or completeness of electronic copies of this plan sheet.
REGISTERED PROFESSIONAL ENGINEER A.L. ELY No. 18880 Exp. 6-30-13 CIVIL STATE OF CALIFORNIA

T.Y. LIN / MOFFATT & NICHOL
TWO HARRISON STREET
SAN FRANCISCO, CA 94105

1166s16 of 1204

DIST.	COUNTY	ROUTE	KILOMETER POST TOTAL PROJECT	SHEET NO.	TOTAL SHEETS
04	SF	80	13.2/13.9	845RIC	1204

REGISTERED ENGINEER - CIVIL
12-6-04
PLANS APPROVAL DATE
The State of California or its officers or agents shall not be responsible for the accuracy or completeness of electronic copies of this plan sheet.
REGISTERED PROFESSIONAL ENGINEER John Sun No. C 54648 Exp. 12/31/05 CIVIL STATE OF CALIFORNIA

T.Y. LIN / MOFFATT & NICHOL
825 BATTERY STREET
SAN FRANCISCO, CA 94111

Caltrans Metric

REGISTERED PROFESSIONAL ENGINEER Manoucher Nader No. C 054426 Exp. 12/31/07 CIVIL STATE OF CALIFORNIA
FOR REVISIONS ONLY

Caltrans now has a web site! To get to the web site, go to: http://www.dot.ca.gov

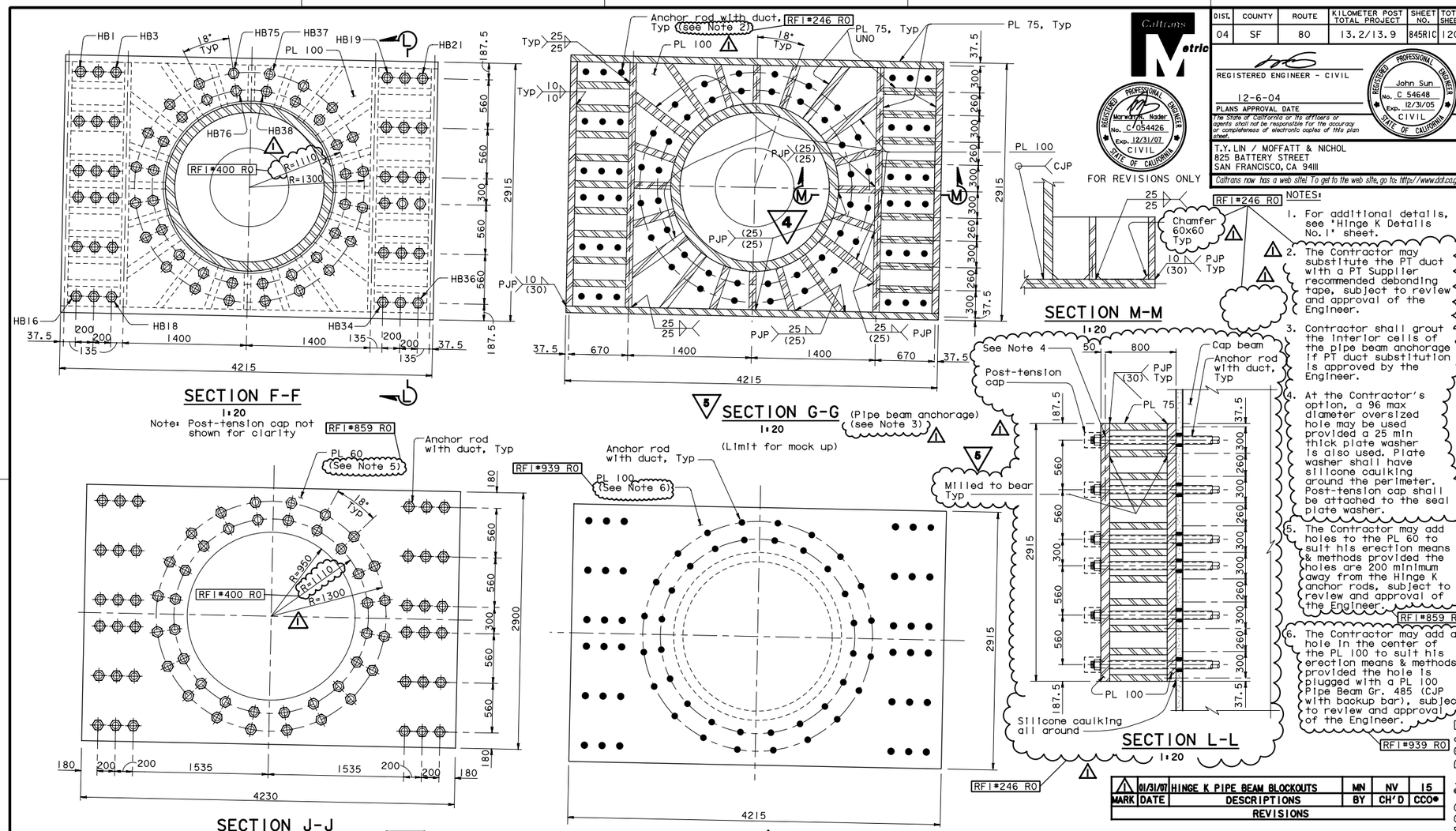

NOTES:

1. For additional details, see 'Hinge K Details No.1' sheet.
2. The Contractor may substitute the PT duct with a PT Supplier recommended debonding tape, subject to review and approval of the Engineer.
3. Contractor shall grout the interior cells of the pipe beam anchorage if PT duct substitution is approved by the Engineer.
4. At the Contractor's option, a 96 max diameter oversized hole may be used provided a 25 min thick plate washer is also used. Plate washer shall have silicone caulking around the perimeter. Post-tension cap shall be attached to the seal plate washer.
5. The Contractor may add holes to the PL 60 to suit his erection means & methods provided the holes are 200 minimum away from the Hinge K anchor rods, subject to review and approval of the Engineer. RFI #859 R0
6. The Contractor may add a hole in the center of the PL 100 to suit his erection means & methods provided the hole is plugged with a PL 100 Pipe Beam Gr. 485 (CJP with backup bar), subject to review and approval of the Engineer. RFI #939 R0

MARK	DATE	DESCRIPTIONS	BY	CH'D	CCO#
4	01/31/07	HINGE K PIPE BEAM BLOCKOUTS	MN	NV	15

REVISIONS

100 % PS&E

4 REVISED PER ADDENDUM NO. 4 DATED DECEMBER 9, 2005

5 REVISED PER ADDENDUM NO. 5 DATED DECEMBER 21, 2005

ALL DIMENSIONS ARE IN MILLIMETERS UNLESS OTHERWISE SHOWN

R. Vallizadeh/V. Toan/Y. L./W. L./F. C.
DESIGN OVERSIGHT
SIGN OFF DATE 01/31/07
Rev. Date: 5-18-98

	BY	CHECKED
DESIGN	J. Sun	C. Redfield
DETAILS	J. Duxbury	M. Chen
QUANTITIES	J. Duxbury	S. Shi

PREPARED FOR THE STATE OF CALIFORNIA DEPARTMENT OF TRANSPORTATION

R. Manzanarez
PROJECT ENGINEER

BRIDGE NO. 34-0006L/R
KILOMETER POST 13.2/13.9

SAN FRANCISCO OAKLAND BAY BRIDGE
EAST SPAN SEISMIC SAFETY PROJECT
SELF-ANCHORED SUSPENSION BRIDGE
(SUPERSTRUCTURE & TOWER)
HINGE K DETAILS NO. 2

ORIGINAL SCALE IN MILLIMETERS FOR REDUCED PLANS 0 10 20 30 40 50 60 70 80 90 100

CU 04
EA 0120F1

DISREGARD PRINTS BEARING EARLIER REVISION DATES
REVISION DATES (PRELIMINARY STAGE ONLY) 05/27/11 04/29/02 03/28/02 12/14/01 11/13/05
SHEET 428RIC OF

Jan 6, 2012

NOTES:

1. The drawing provided hereon is reproduced from the contract plans of the adjacent Self-Anchored Suspension Bridge contract.
2. This drawing provides details of the Hinge K pipe beam and is for reference only, pipe beams to be furnished and erected by others.

DESIGN OVERSIGHT
ADE AKINSANYA
SIGN OFF DATE
Rev. Date: 5-18-98

	BY	CHECKED
DESIGN	NA	NA
DETAILS	van Ryn/Zucchi/Mai	Jain
QUANTITIES	Liao	E. Nichol

PREPARED FOR THE STATE OF CALIFORNIA DEPARTMENT OF TRANSPORTATION

Jal Birdy
PROJECT ENGINEER

BRIDGE NO. 34-0006 L/R
KILOMETER POST 12.8

SAN FRANCISCO OAKLAND BAY BRIDGE
EAST SPAN SEISMIC SAFETY PROJECT
YBI TRANSITION STRUCTURES - HINGE K
HINGE K CLOSURE DETAILS NO. 12

ORIGINAL SCALE IN MILLIMETERS FOR REDUCED PLANS 0 10 20 30 40 50 60 70 80 90 100

CU 04
EA 0120F1

DISREGARD PRINTS BEARING EARLIER REVISION DATES
REVISION DATES (PRELIMINARY STAGE ONLY)
SHEET K129A OF 209

USERNAME => fsamson DATE PLOTTED => 1/5/2012 TIME PLOTTED => 5:21:20 PM

FILE => P:\4141-06\CADD\TS\Checked Plans\YBITS #1-100% No. 2_03-03-08 (Final Renamed)\010612 Hinge K SAS T19 CCO\04-0120f1-34-006r1-n-hinged12.dgn

DIST.	COUNTY	ROUTE	KILOMETER POST TOTAL PROJECT	SHEET NO.	TOTAL SHEETS
04	SF	80	12.7/13.2	K679A	806

REGISTERED ENGINEER - CIVIL
01/20/2012
PLANS APPROVAL DATE
REGISTERED PROFESSIONAL ENGINEER A.L. ELY No. 18880 Exp. 6-30-13 CIVIL STATE OF CALIFORNIA
The State of California or its officers or agents shall not be responsible for the accuracy or completeness of electronic copies of this plan sheet.

T.Y. LIN / MOFFATT & NICHOL
TWO HARRISON STREET
SAN FRANCISCO, CA 94105

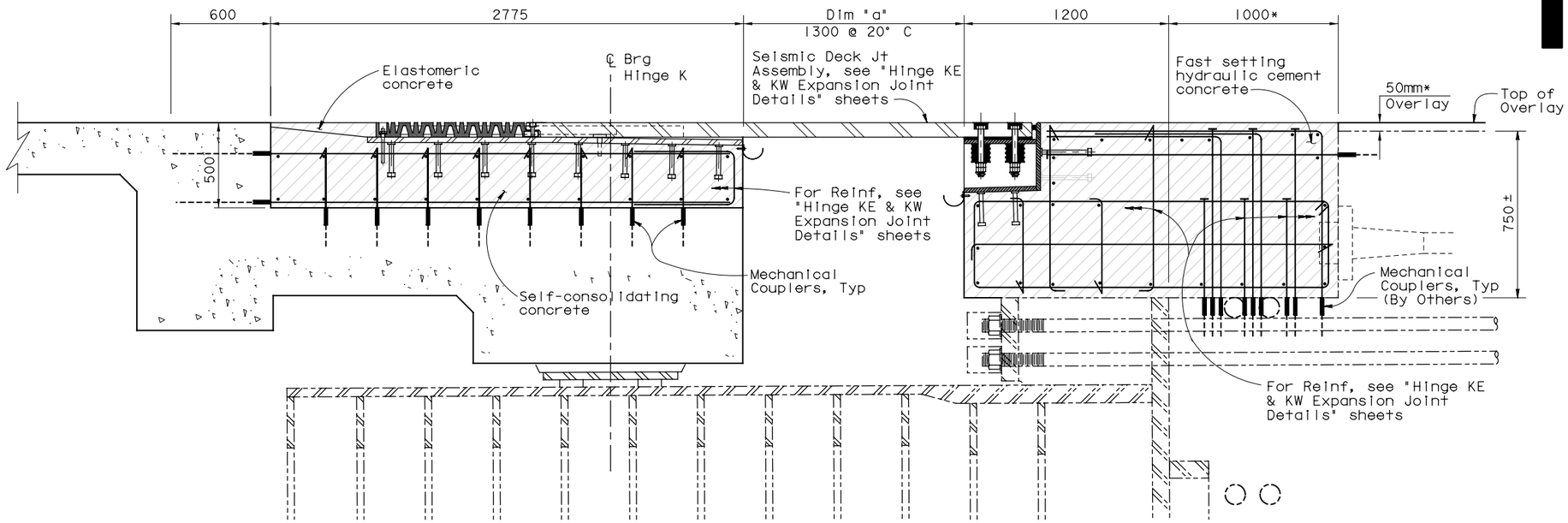

TYPICAL SECTION AT EXPANSION JOINT

1:15

Expansion Joint Information Movement Rating (MR): 280 mm	
Air Temperature (T)	Dimension "a" (mm)
5° C	1350
10° C	1333
15° C	1317
20° C	1300
25° C	1284
30° C	1267
35° C	1251

Indicates concrete placed when deck joint installed

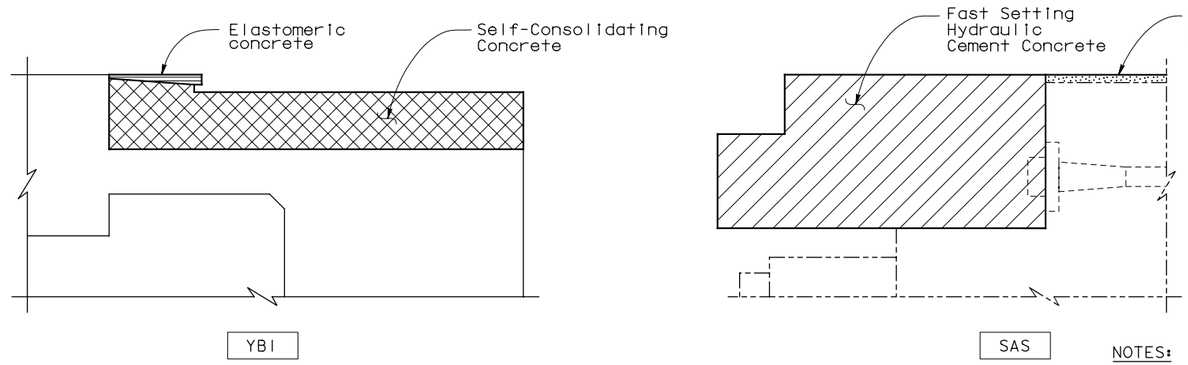

Fast Setting Hydraulic Cement Concrete (FSHCC) (f'_{ci} = 14 MPa @ 3 hours, f'_c = 35 MPa @ 56 days)

Self-Consolidating Concrete (SCC) Bridge (f'_c = 35 MPa @ 56 days)

Overlay

Elastomeric Concrete (see Note 1)

CONCRETE STRENGTH AND TYPE LIMITS

NOTES:

1. At the Contractor's option, Watson Bowman's WaboCrete II Elastomeric Concrete may be used, subject to review and approval of the Engineer.

SUPPLEMENTAL SHEET

CONTRACT CHANGE ORDER NO. _____
SHEET ____ OF ____

ALL DIMENSIONS ARE IN MILLIMETERS UNLESS OTHERWISE SHOWN

SAN FRANCISCO OAKLAND BAY BRIDGE
EAST SPAN SEISMIC SAFETY PROJECT

YBI TRANSITION STRUCTURES - HINGE K

HINGE K CLOSURE DETAILS NO. 13

DESIGN OVERSIGHT ADE AKINSANYA
SIGN OFF DATE

	BY	CHECKED
DESIGN	Lee	Wang
DETAILS	van Ryn/Zucchi/Mai	Jain
QUANTITIES	Liao	E. Nichol

PREPARED FOR THE STATE OF CALIFORNIA DEPARTMENT OF TRANSPORTATION

Jai Birdy
PROJECT ENGINEER

BRIDGE NO. 34-0006L/R
KILOMETER POST 12.8

Rev. Date: 5-18-98

ORIGINAL SCALE IN MILLIMETERS FOR REDUCED PLANS 0 10 20 30 40 50 60 70 80 90 100

CU 04
EA 0120F1

DISREGARD PRINTS BEARING EARLIER REVISION DATES

REVISION DATES (PRELIMINARY STAGE ONLY)

SHEET K130A OF 209

FILE => P:\4141-06\CADD\TS\Checked Plans\YBITS #1-100% No. 2_03-03-08 (Final Renamed)\010612 Hinge K SAS T19 CCO\04-0120f1-34-006r

Jan 6, 2012

TIME PLOTTED => 5:21:29 PM
DATE PLOTTED => 1/5/2012
USERNAME => fsamson

DIST.	COUNTY	ROUTE	KILOMETER POST TOTAL PROJECT	SHEET NO.	TOTAL SHEETS
04	SF	80	12.7/13.2	K680A	806

Caltrans Metric

REGISTERED ENGINEER - CIVIL
01/20/2012
PLANS APPROVAL DATE

REGISTERED PROFESSIONAL ENGINEER A.L. ELY No. 18880 Exp. 6-30-13 CIVIL STATE OF CALIFORNIA

The State of California or its officers or agents shall not be responsible for the accuracy or completeness of electronic copies of this plan sheet.

T.Y. LIN / MOFFATT & NICHOL
TWO HARRISON STREET
SAN FRANCISCO, CA 94105

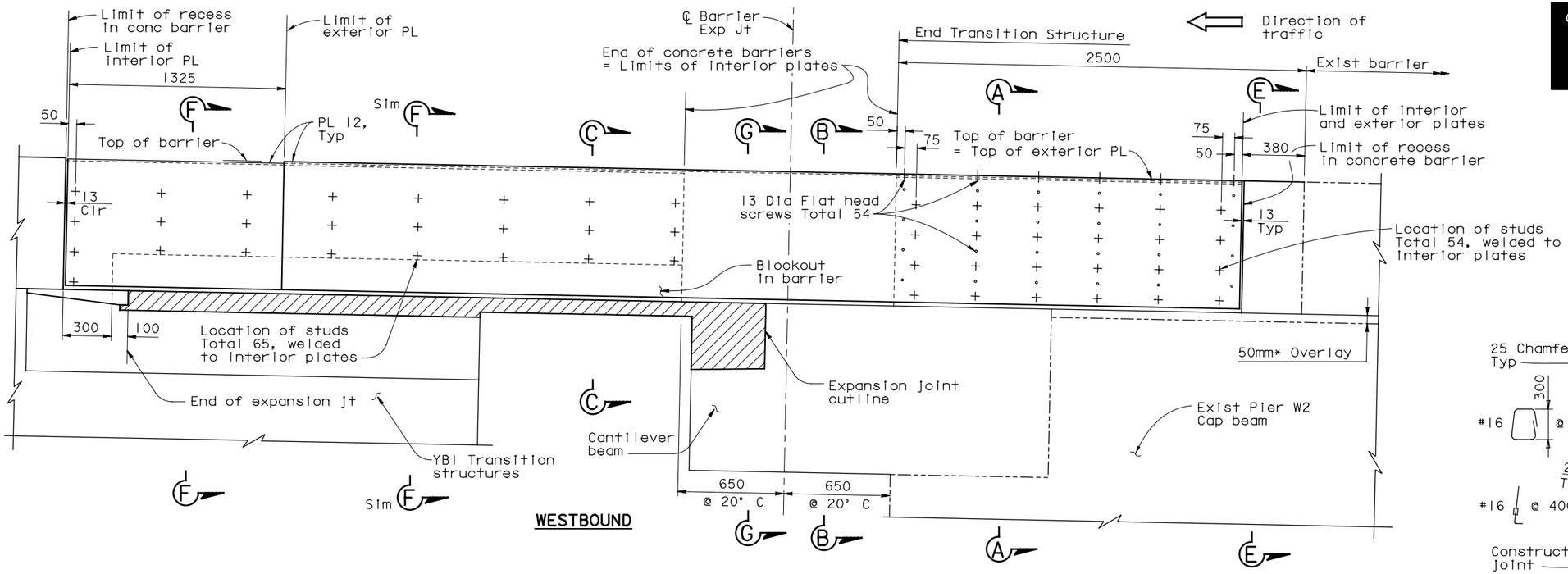

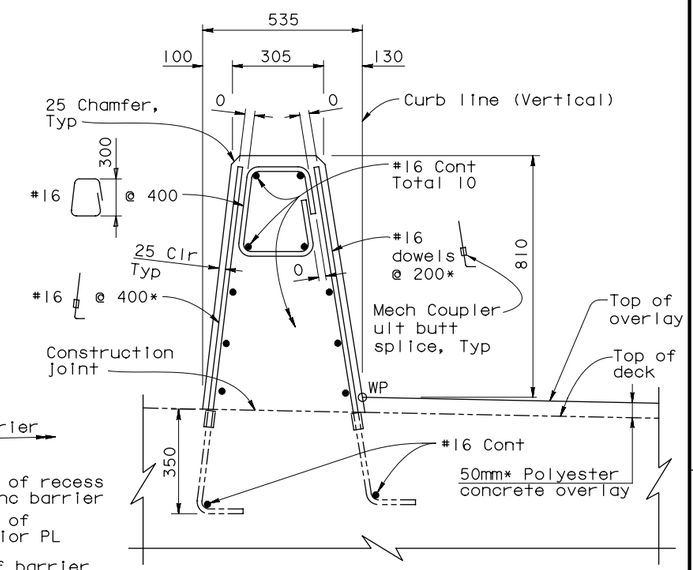

SECTION E-E

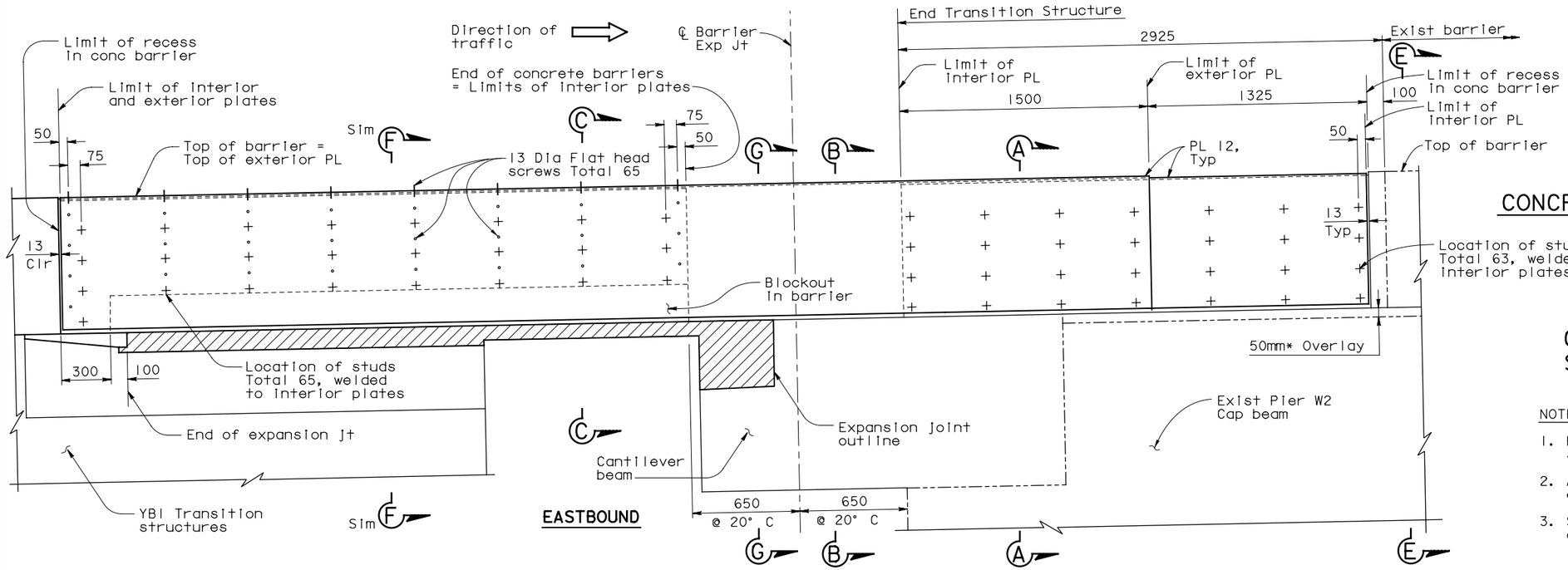

BARRIER AT HINGE K - ELEVATION
1:15

ALL DIMENSIONS ARE IN MILLIMETERS UNLESS OTHERWISE SHOWN

CONCRETE BARRIER TYPE 732 (MODIFIED)
For Pier W2 Cap beam only
1:10

SUPPLEMENTAL SHEET

CONTRACT CHANGE ORDER NO. _____
SHEET ____ OF ____

NOTES:

1. For Sections A-A, B-B, C-C, F-F and G-G, see "Hinge K Closure Details No.15" sheet.
2. All reinforcement in concrete barrier shall be epoxy coated.
3. Steel barrier cover plates to be furnished by others and installed by Contractor.

SAN FRANCISCO OAKLAND BAY BRIDGE
EAST SPAN SEISMIC SAFETY PROJECT

YBI TRANSITION STRUCTURES - HINGE K

HINGE K CLOSURE DETAILS NO.14

DESIGN OVERSIGHT ADE AKINSANYA	DESIGN	BY Lee	CHECKED Wang
SIGN OFF DATE	DETAILS	BY van Ryn/Zucchi/Mai	CHECKED Jain
Rev. Date: 5-18-98	QUANTITIES	BY Liao	CHECKED E. Nichol

PREPARED FOR THE STATE OF CALIFORNIA DEPARTMENT OF TRANSPORTATION

Jal Birdy
PROJECT ENGINEER

BRIDGE NO. 34-0006L/R
KILOMETER POST 12.8

CU 04
EA 0120F1

ORIGINAL SCALE IN MILLIMETERS FOR REDUCED PLANS 0 10 20 30 40 50 60 70 80 90 100

DISREGARD PRINTS BEARING EARLIER REVISION DATES

REVISION DATES (PRELIMINARY STAGE ONLY)

SHEET K131A OF 209

FILE => P:\4141-06\CADD\TS\Checked Plans\YBITS #1-100% No. 2_03-03-08 (Final Renamed)\010612 Hinge K SAS T19 CCO\04-0120f1-34-006r1

Jan 6, 2012

TIME PLOTTED => 5:21:38 PM
DATE PLOTTED => 1/5/2012
USERNAME => fsamson

DIST.	COUNTY	ROUTE	KILOMETER POST TOTAL PROJECT	SHEET NO.	TOTAL SHEETS
04	SF	80	12.7/13.2	K681A	806

Caltrans Metric

REGISTERED ENGINEER - CIVIL
01/20/2012
PLANS APPROVAL DATE

REGISTERED PROFESSIONAL ENGINEER A.L. ELY No. 18880 Exp. 6-30-13 CIVIL STATE OF CALIFORNIA

The State of California or its officers or agents shall not be responsible for the accuracy or completeness of electronic copies of this plan sheet.

T.Y. LIN / MOFFATT & NICHOL
TWO HARRISON STREET
SAN FRANCISCO, CA 94105

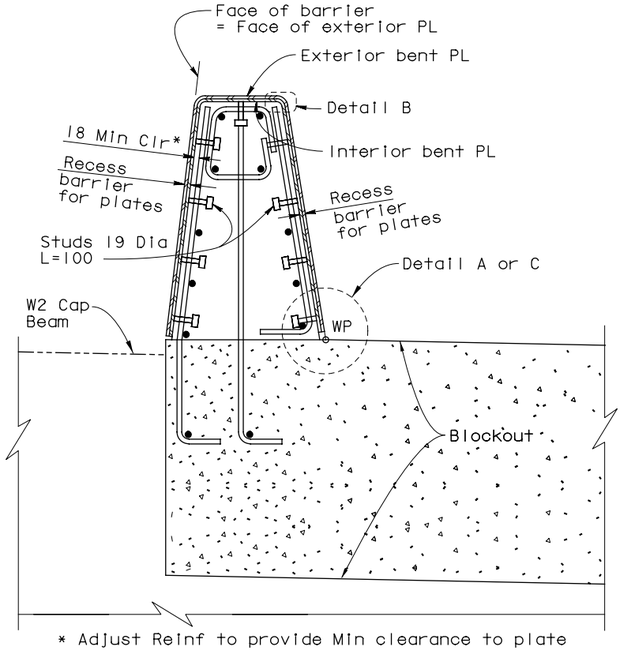

* Adjust Reinf to provide Min clearance to plate

SECTION A-A
1:10

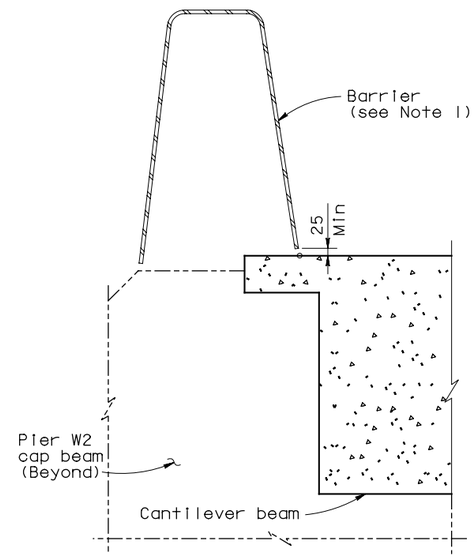

SECTION B-B
1:10

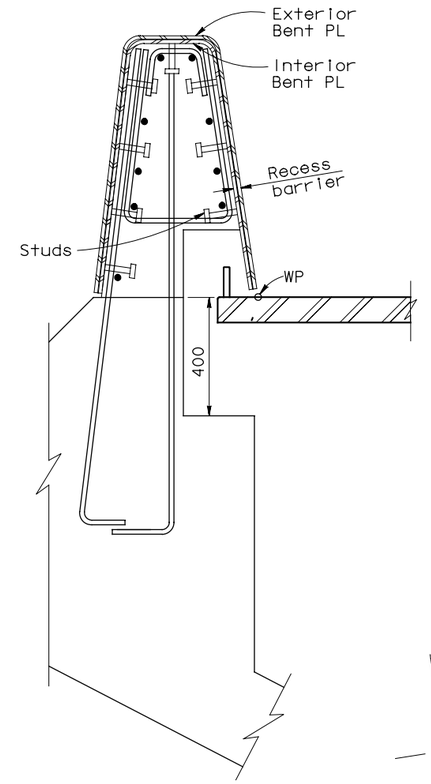

SECTION C-C
1:10

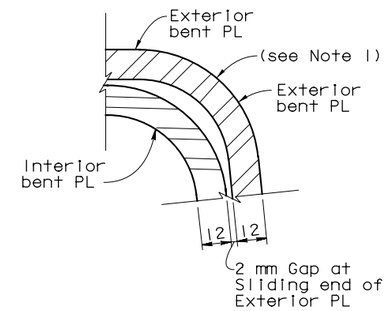

DETAIL B
NTS

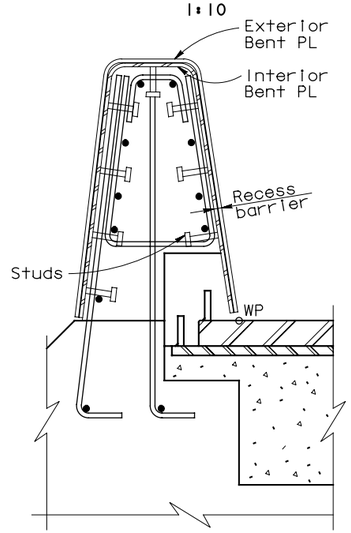

SECTION F-F
1:10

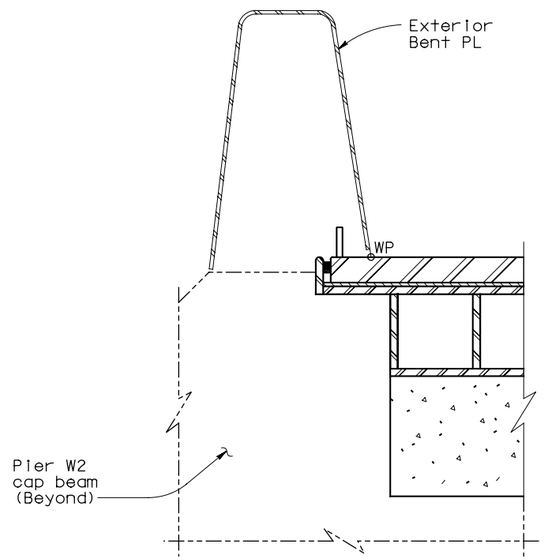

SECTION G-G
1:10

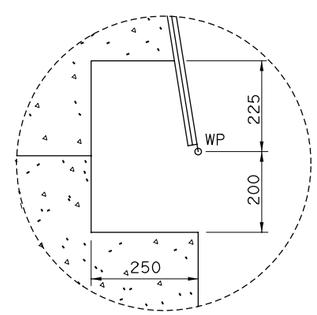

TYPICAL BARRIER BLOCKOUT
NTS

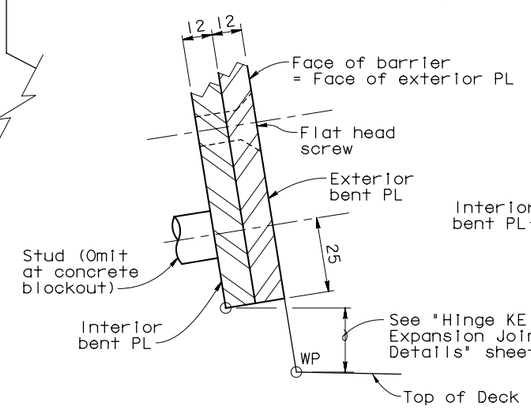

DETAIL TYPICAL AT FIXED END OF EXTERIOR PL
DETAIL A
NTS

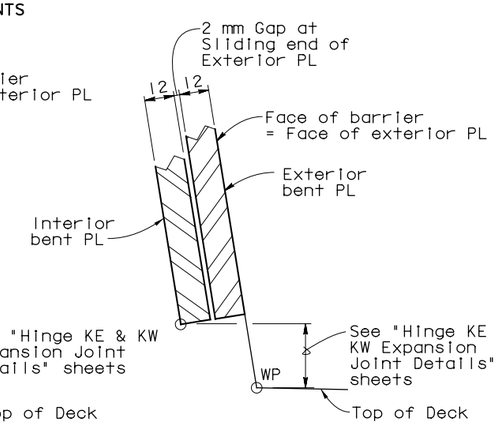

DETAIL TYPICAL AT SLIDING END OF EXTERIOR PL
DETAIL C
NTS

NOTES:

1. Bend steel plates to conform to shape of concrete barrier.
2. Galvanize all metal hardware after fabrication.
3. Steel barrier cover plates to be furnished by others and installed by Contractor.

SUPPLEMENTAL SHEET

CONTRACT CHANGE ORDER NO. _____
SHEET ____ OF ____

ALL DIMENSIONS ARE IN MILLIMETERS UNLESS OTHERWISE SHOWN

SAN FRANCISCO OAKLAND BAY BRIDGE
EAST SPAN SEISMIC SAFETY PROJECT

YBI TRANSITION STRUCTURES - HINGE K

HINGE K CLOSURE DETAILS NO. 15

DESIGN OVERSIGHT
ADE AKINSANYA
SIGN OFF DATE

	BY	CHECKED
DESIGN	Lee	Wang
DETAILS	van Ryn/Zucchi/Mal	Jain
QUANTITIES	Liao	E. Nichol

PREPARED FOR THE STATE OF CALIFORNIA DEPARTMENT OF TRANSPORTATION

J. Birdy
PROJECT ENGINEER

BRIDGE NO. 34-0006L/R
KILOMETER POST 12.8

CU 04
EA 0120F1

DISREGARD PRINTS BEARING EARLIER REVISION DATES

REVISION DATES (PRELIMINARY STAGE ONLY)

SHEET K132A OF 209

Rev. Date: 5-18-98

ORIGINAL SCALE IN MILLIMETERS FOR REDUCED PLANS 0 10 20 30 40 50 60 70 80 90 100

FILE => P:\4141-06\CADD\TS\Checked Plans\YBITS #1-100% No. 2_03-03-08 (Final Renamed)\010612 Hinge K SAS T19 CCO\04-0120f1-34-006r1

Jan 6, 2012

TIME PLOTTED => 5:21:47 PM
DATE PLOTTED => 1/5/2012
USERNAME => fsamson

DIST.	COUNTY	ROUTE	KILOMETER POST TOTAL PROJECT	SHEET NO.	TOTAL SHEETS
04	SF	80	12.7/13.2	K697A	806

REGISTERED ENGINEER - CIVIL
01/20/2012
PLANS APPROVAL DATE

REGISTERED PROFESSIONAL ENGINEER Marwan N. Nader No. C 054426 Exp. 12/31/13 CIVIL STATE OF CALIFORNIA

The State of California or its officers or agents shall not be responsible for the accuracy or completeness of electronic copies of this plan sheet.

T.Y. LIN / MOFFATT & NICHOL
TWO HARRISON STREET
SAN FRANCISCO, CA 94105

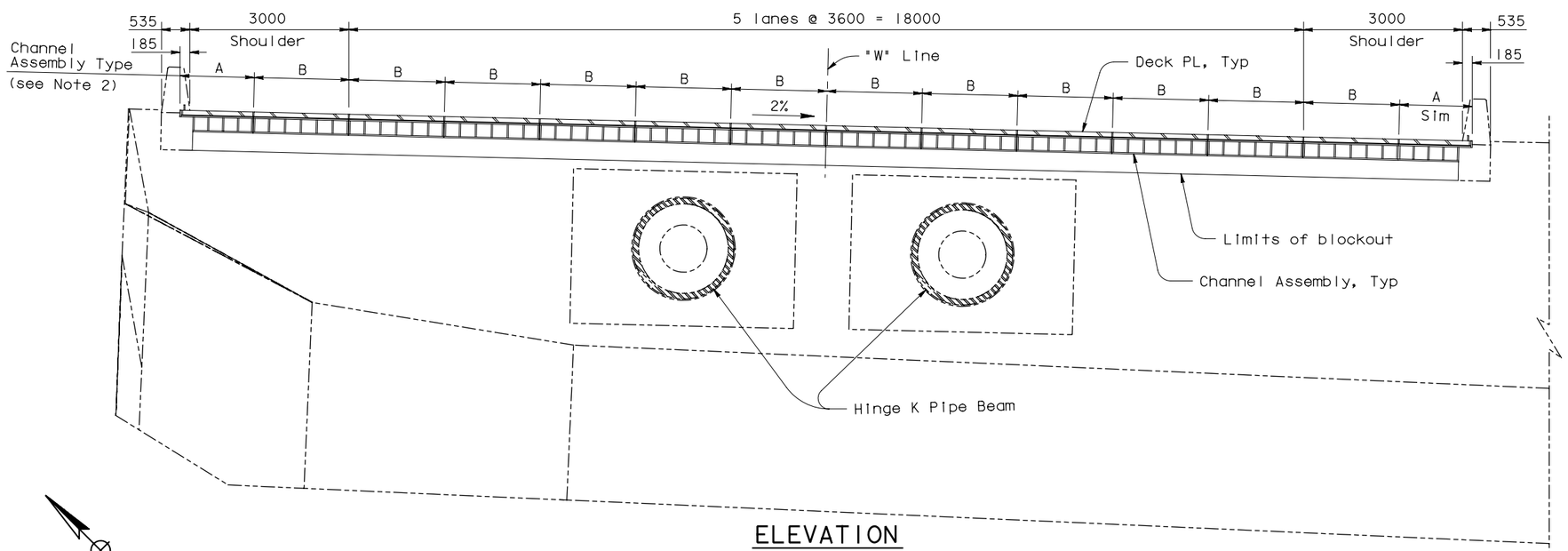

ELEVATION

1:50

(Westbound Shown, Eastbound Similar)
(Elevation View Looking East)

Note: Hinge KE & KW Expansion Joints to be furnished by others and installed by the Contractor.

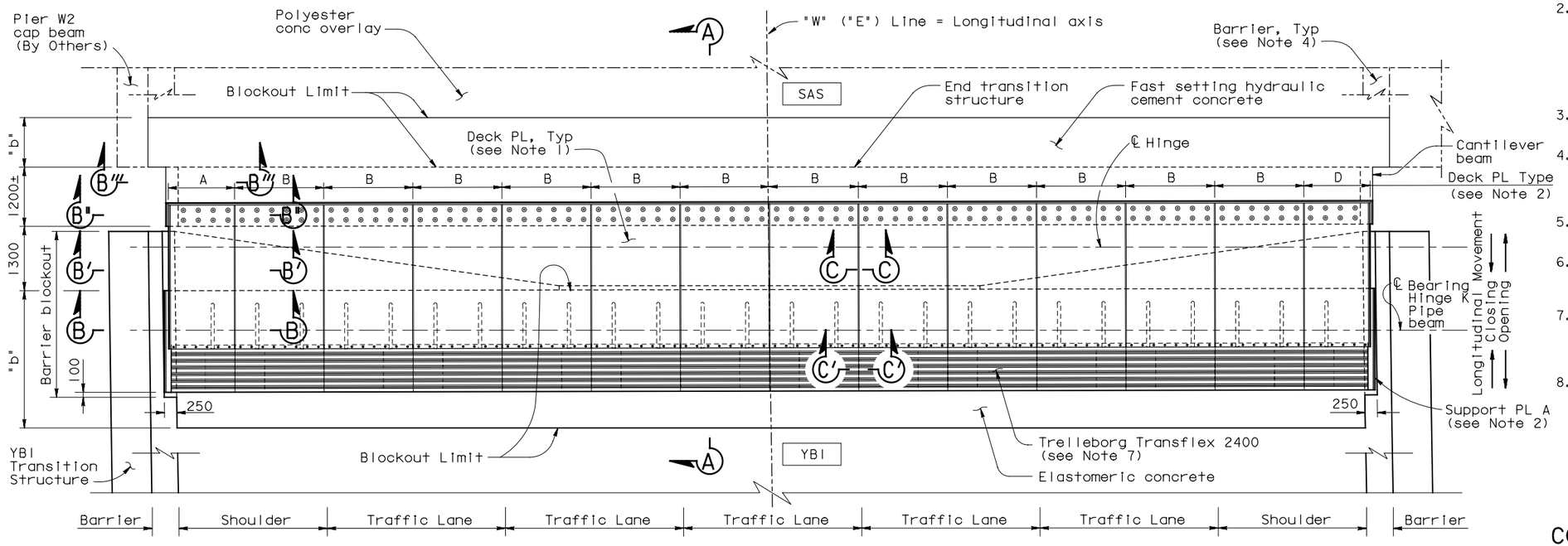

PLAN-EXPANSION JOINT

1:50

(Westbound Shown, Eastbound Similar)

NOTES:

1. For Deck Plates A, B and D, see "Hinge KE & KW Expansion Joint Details No.3" sheet.
2. Deck Plate A and D matches with Support Plate A and the Channel Assembly A (Module A). Deck Plate B matches with Support Plate B and the Channel Assembly B (Module B). For details, see "Hinge KE & KW Expansion Joint Details No.3" and "Hinge KE & KW Expansion Joint Details No.5" sheets.
3. One module "B" is placed per half traffic lane.
4. Portions of barriers are not shown for clarity. For barrier details at expansion joint, see "Hinge K Closure Details No.14" sheet.
5. For Section A-A, see "Hinge KE & KW Expansion Joint Details No.2" sheet.
6. For Sections B-B, B′-B′, B′′-B′′, B′′′-B′′′, C-C and C′-C′, see "Hinge KE & KW Expansion Joint Details No.3" sheet.
7. The expansion joint shall be 1800 wide Transflex 2400 module with movement rating of 600. The joint between the Transflex modules shall be water tight.
8. For General Notes, see "General Notes" sheets.

SUPPLEMENTAL SHEET

CONTRACT CHANGE ORDER NO. _____
SHEET ____ OF ____

ALL DIMENSIONS ARE IN MILLIMETERS UNLESS OTHERWISE SHOWN

SAN FRANCISCO OAKLAND BAY BRIDGE
EAST SPAN SEISMIC SAFETY PROJECT

YBI TRANSITION STRUCTURES - HINGE K

HINGE KE & KW EXPANSION JOINT DETAILS NO.1

DESIGN OVERSIGHT ADE AKINSANYA	DESIGN	BY C. Redfield	CHECKED M. Nader
SIGN OFF DATE	DETAILS	BY H. Patel	CHECKED J. Duxbury
Rev. Date: 5-18-98	QUANTITIES	BY H. Patel	CHECKED J. Duxbury

PREPARED FOR THE STATE OF CALIFORNIA DEPARTMENT OF TRANSPORTATION

Jal Birdy
PROJECT ENGINEER

BRIDGE NO. 34-0006 L/R
KILOMETER POST 12.8

CU 04
EA 0120F1

ORIGINAL SCALE IN MILLIMETERS FOR REDUCED PLANS 0 10 20 30 40 50 60 70 80 90 100

DISREGARD PRINTS BEARING EARLIER REVISION DATES

REVISION DATES (PRELIMINARY STAGE ONLY)

SHEET K148A OF 209

FILE => P:\4141-06\CADD\TS\Checked Plans\YBITS #1-100% No. 2_03-03-08 (Final Renamed)\011212 Hinge K SAS T19 CCO\TYLin sheets\04-01

USERNAME => fsamson DATE PLOTTED => 1/12/2012 TIME PLOTTED => 4:17:29 PM

Jan 6, 2012

DIST.	COUNTY	ROUTE	KILOMETER POST TOTAL PROJECT	SHEET NO.	TOTAL SHEETS
04	SF	80	12.7/13.2	K698A	806

REGISTERED ENGINEER - CIVIL

01/20/2012

PLANS APPROVAL DATE

REGISTERED PROFESSIONAL ENGINEER Marwan N. Nader No. C 054426 Exp. 12/31/13 CIVIL STATE OF CALIFORNIA

The State of California or its officers or agents shall not be responsible for the accuracy or completeness of electronic copies of this plan sheet.

T.Y. LIN / MOFFATT & NICHOL
TWO HARRISON STREET
SAN FRANCISCO, CA 94105

Note: Hinge KE & KW Expansion Joints to be furnished by others and installed by the Contractor.

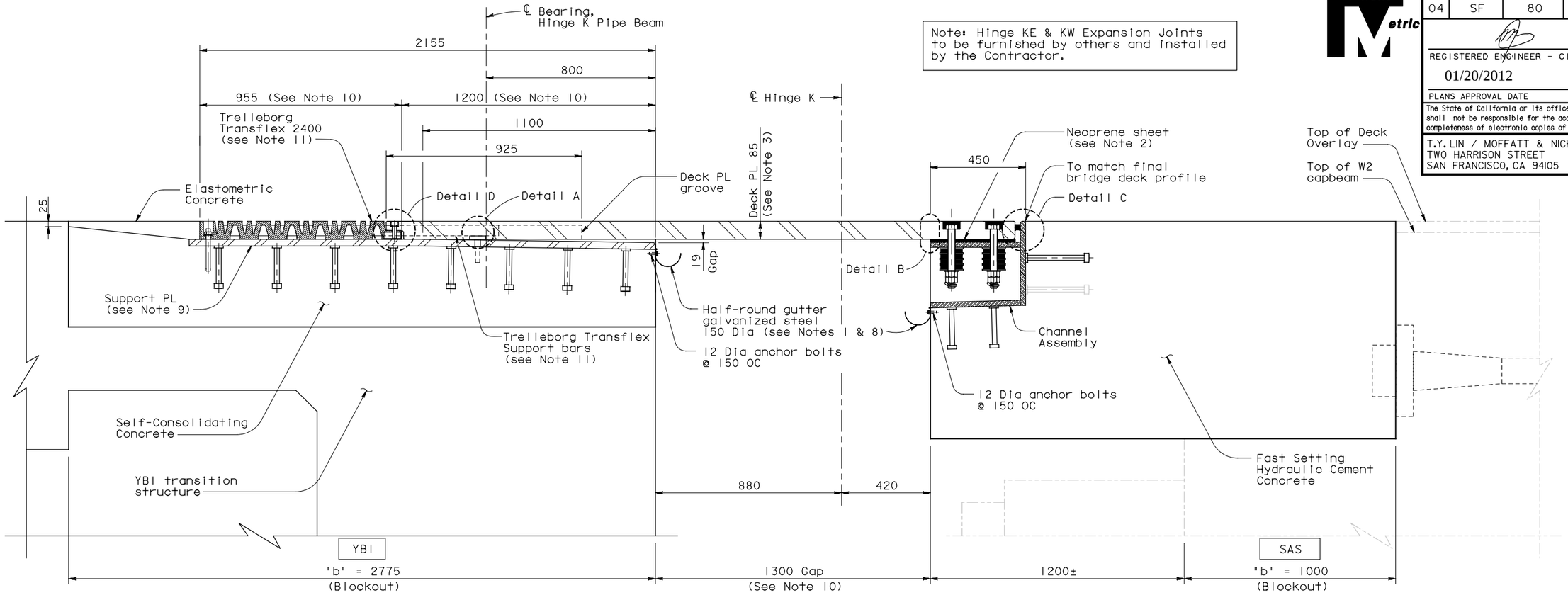

SECTION A-A

1:10

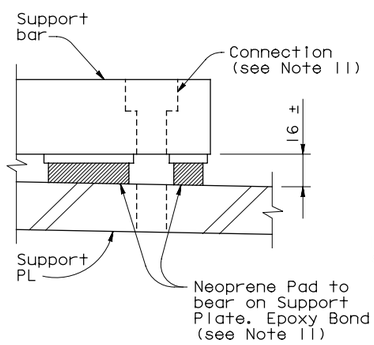

DETAIL A

1:2

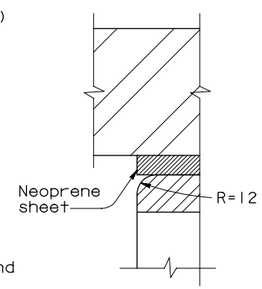

DETAIL B

1:2

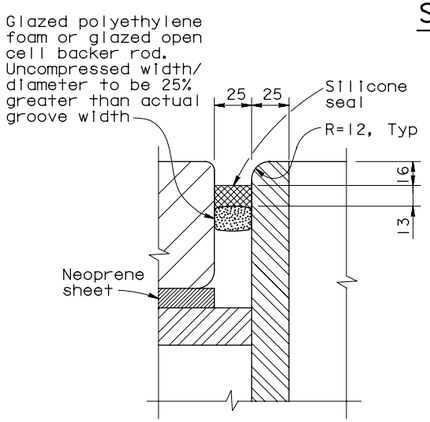

DETAIL C

1:2

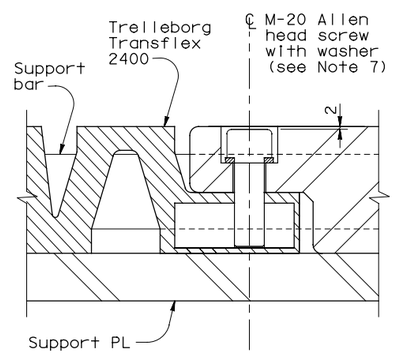

DETAIL D

1:2

NOTES:

1. Use caulking or sealant between gutter and concrete.
2. 40 mm holes in neoprene sheets shall be drilled or punched so that the neoprene is not distorted at the time of installation. See "Hinge KE & KW Expansion Joint Details No.6" sheet.
3. For deck plate layout and details, see "Hinge KE & KW Expansion Joint Details No.1" sheet. For deck plate friction groove pattern, see "Hinge KE & KW Expansion Joint Details No.4" sheet.
4. For mild steel reinforcement in blockout areas, see "Hinge KE & KW Expansion Joint Details No.8" sheet.
5. For channel assembly details, see "Hinge KE & KW Expansion Joint Details No.5" and "Hinge KE & KW Expansion Joint Details No.6" sheets.
6. Place deck plate, support plate and channel assembly so that full bearing is achieved between 1) deck plate and channel assembly and 11) deck plate and support plates as shown in Section A-A.
7. M-20 Allen head screw shall be stainless steel.
8. Gutter shall be placed 75 mm minimum clear from the deck plate and shall be parallel to deck cross slope.
9. For support plate details see "Hinge KE & KW Expansion Joint Details No.7" sheet.
10. Values are for mean temperature of 20°C.
11. All the connection hardware shall be supplied with Trelleborg Transflex 2400. The connection of Transflex 2400 and that of the support bar to the blockout concrete shall be drill and bond dowels.

SUPPLEMENTAL SHEET

CONTRACT CHANGE ORDER NO. _____
SHEET ____ OF ____

ALL DIMENSIONS ARE IN MILLIMETERS UNLESS OTHERWISE SHOWN

SAN FRANCISCO OAKLAND BAY BRIDGE
EAST SPAN SEISMIC SAFETY PROJECT

YBI TRANSITION STRUCTURES - HINGE K

HINGE KE & KW EXPANSION JOINT DETAILS NO.2

DESIGN OVERSIGHT ADE AKINSANYA

SIGN OFF DATE

Rev. Date: 5-18-98

	BY	CHECKED
DESIGN	C. Redfield	M. Nader
DETAILS	H. Patel	J. Duxbury
QUANTITIES	H. Patel	J. Duxbury

PREPARED FOR THE STATE OF CALIFORNIA DEPARTMENT OF TRANSPORTATION

Jal Birdy
PROJECT ENGINEER

BRIDGE NO. 34-0006 L/R
KILOMETER POST 12.8

ORIGINAL SCALE IN MILLIMETERS FOR REDUCED PLANS 0 10 20 30 40 50 60 70 80 90 100

CU 04
EA 0120F1

DISREGARD PRINTS BEARING EARLIER REVISION DATES

REVISION DATES (PRELIMINARY STAGE ONLY)

SHEET K149A OF 209

FILE => P:\4141-06\CADD\TS\Checked Plans\YBITS #1-100% No. 2_03-08 (Final Renamed)\011212 Hinge K SAS T19 CCO\TYLin sheets\04-0

USERNAME => fsamson DATE PLOTTED => 1/12/2012 TIME PLOTTED => 4:17:39 PM

Jan 6, 2012

DIST.	COUNTY	ROUTE	KILOMETER POST TOTAL PROJECT	SHEET NO.	TOTAL SHEETS
04	SF	80	12.7/13.2	K699A	806

REGISTERED ENGINEER - CIVIL
01/20/2012
PLANS APPROVAL DATE

REGISTERED PROFESSIONAL ENGINEER Marwan N. Nader No. C 054426 Exp. 12/31/13 CIVIL STATE OF CALIFORNIA

The State of California or its officers or agents shall not be responsible for the accuracy or completeness of electronic copies of this plan sheet.

T.Y. LIN / MOFFATT & NICHOL
TWO HARRISON STREET
SAN FRANCISCO, CA 94105

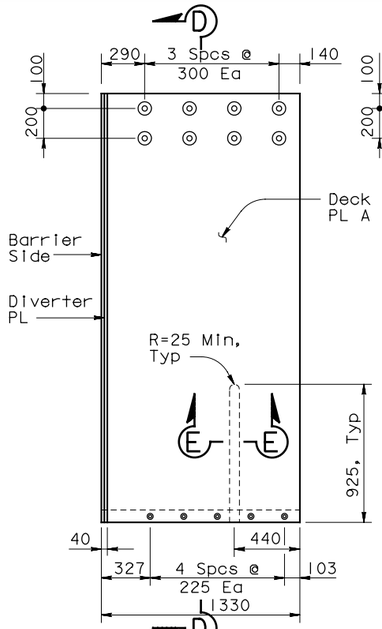

DECK PLATE A
1:20

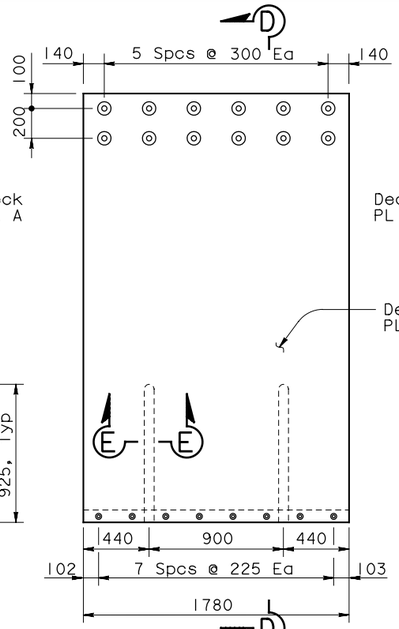

DECK PLATE B
1:20

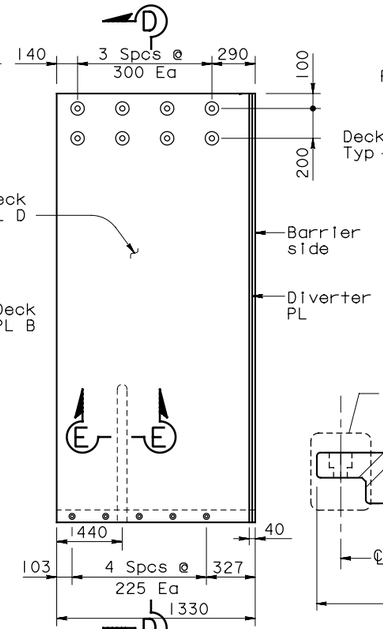

DECK PLATE D
1:20

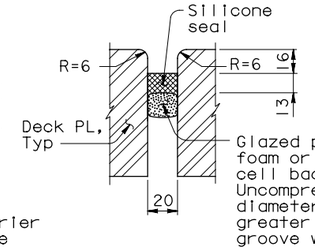

SECTION C-C
1:20

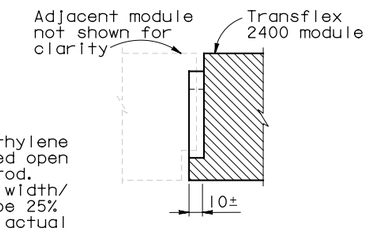

SECTION C'-C'
1:20

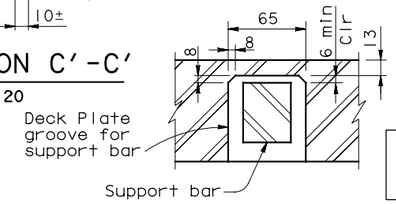

SECTION E-E
1:2.5

Note: Hinge KE & KW Expansion Joints to be furnished by others and installed by the Contractor.

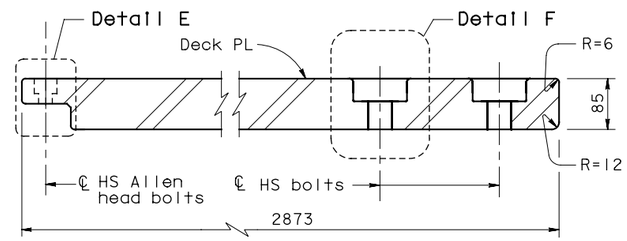

SECTION D-D
1:5

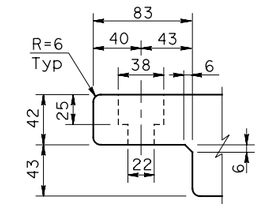

DETAIL E
1:2.5

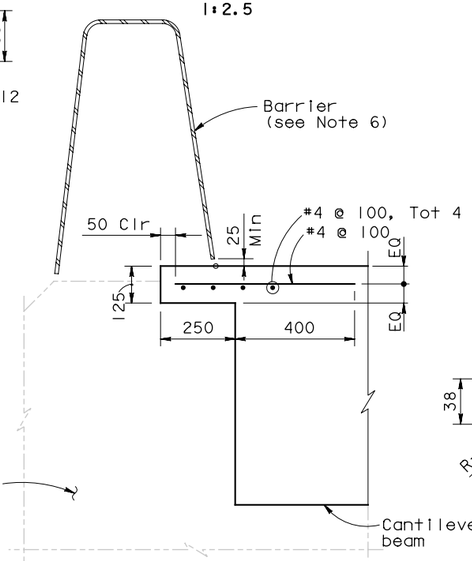

SECTION B'''-B'''
1:10

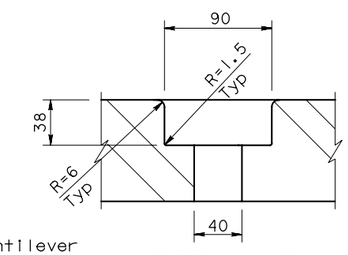

DETAIL F
1:2.5

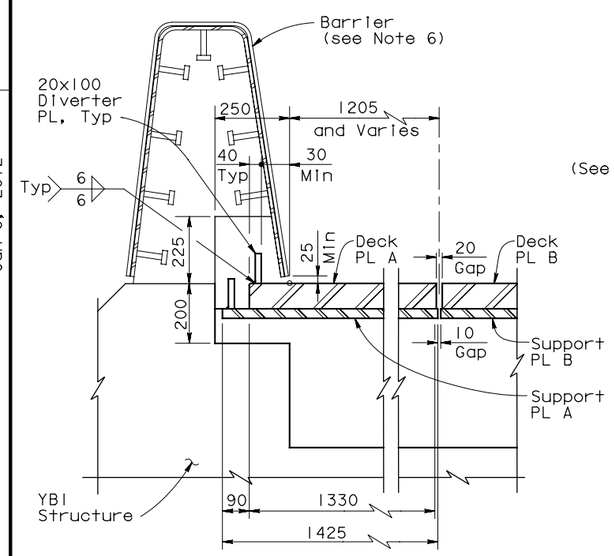

SECTION B-B
1:10

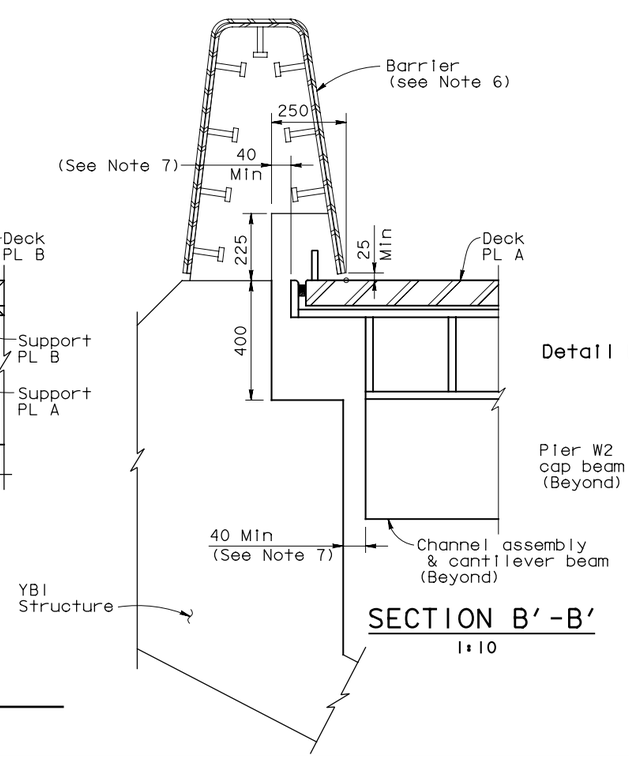

SECTION B'-B'
1:10

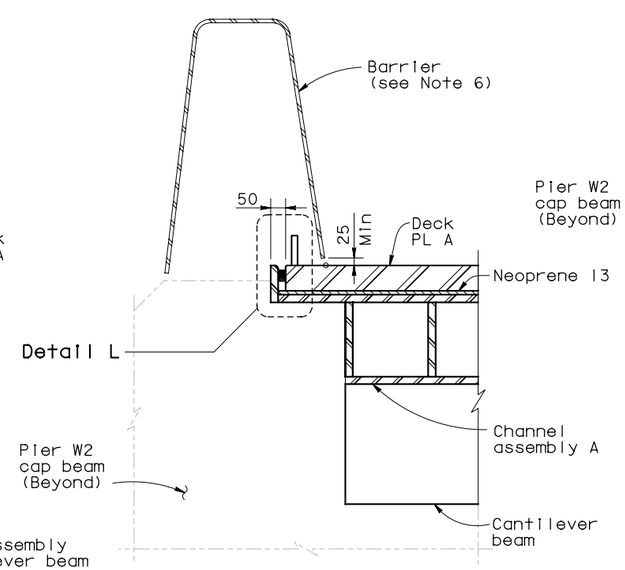

SECTION B''-B''
1:10

NOTES:

1. For deck plate plan see "Hinge KE & KW Expansion Joint Details No.1" sheet.
2. Diverter plate applies to Deck plates A and D and Support plate A only.
3. For bolting of deck plates to channel assembly details, see "Hinge KE & KW Expansion Joint Details No.6" sheet.
4. For connection detail between Trelleborg Transflex 2400 and deck plate see, "Hinge KE & KW Expansion Joint Details No.2" sheet.
5. For Detail L, see "Hinge KE & KW Expansion Joint Details No.6" sheet.
6. For barrier details, see "Hinge K Closure Details No.14" sheet.
7. Minimum clearance of 40 mm shall be provided between the cantilever at SAS blockout and interior face of YBI edge girder to ensure free seismic closing movement.

SUPPLEMENTAL SHEET

CONTRACT CHANGE ORDER NO. _____
SHEET ____ OF ____

ALL DIMENSIONS ARE IN MILLIMETERS UNLESS OTHERWISE SHOWN

SAN FRANCISCO OAKLAND BAY BRIDGE
EAST SPAN SEISMIC SAFETY PROJECT

YBI TRANSITION STRUCTURES - HINGE K

HINGE KE & KW EXPANSION JOINT DETAILS NO.3

DESIGN	BY C. Redfield	CHECKED M. Nader	
DETAILS	BY H. Patel	CHECKED J. Duxbury	
QUANTITIES	BY H. Patel	CHECKED J. Duxbury	

DESIGN OVERSIGHT
ADE AKINSANYA
SIGN OFF DATE

PREPARED FOR THE STATE OF CALIFORNIA DEPARTMENT OF TRANSPORTATION

Jal Birdy
PROJECT ENGINEER

BRIDGE NO. 34-0006 L/R
KILOMETER POST 12.8

Rev. Date: 5-18-98

ORIGINAL SCALE IN MILLIMETERS FOR REDUCED PLANS 0 10 20 30 40 50 60 70 80 90 100

CU 04
EA 0120F1

DISREGARD PRINTS BEARING EARLIER REVISION DATES

REVISION DATES (PRELIMINARY STAGE ONLY)

SHEET K150A OF 209

FILE => P:\4141-06\CADD\TS\Checked Plans\YBITS #1-100% No. 2_03-03-08 (Final Renamed)\011212 Hinge K SAS T19 CCO\TYLin sheets\04-01

Jan 6, 2012

TIME PLOTTED => 4:17:48 PM

DATE PLOTTED => 1/12/2012

USERNAME => fsamson

DIST	COUNTY	ROUTE	KILOMETER POST TOTAL PROJECT	SHEET No	TOTAL SHEETS
04	SF	80	12.7/13.2	K700A	806

REGISTERED CIVIL ENGINEER DATE

01/20/2012

PLANS APPROVAL DATE

REGISTERED PROFESSIONAL ENGINEER Enrico G. Maggenti No. 46920 Exp. 6/30/13 CIVIL STATE OF CALIFORNIA

The State of California or its officers or agents shall not be responsible for the accuracy or completeness of electronic copies of this plan sheet.

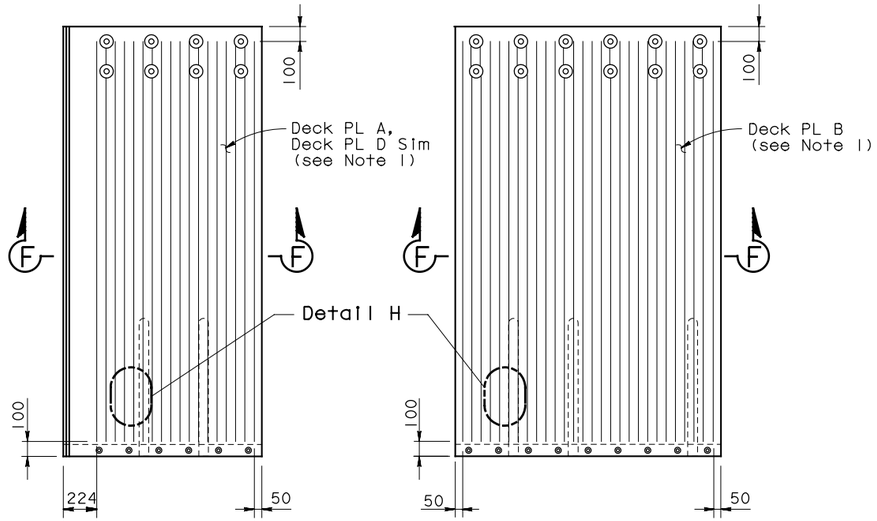

DECK PLATE A/D

(Deck PL A Shown, Deck PL D Similar)

DECK PLATE B

FRICTION PATTERN (See Note 2)

1:20

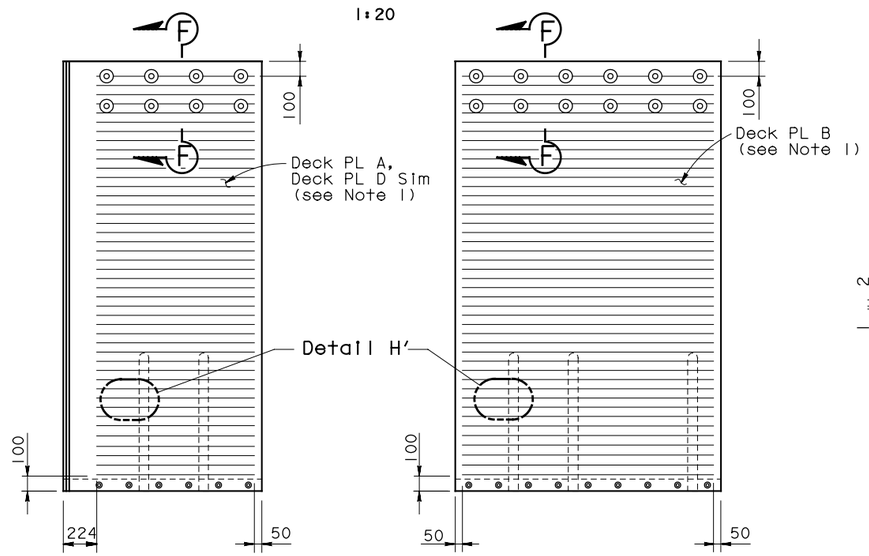

DECK PLATE A/D

(Deck PL A Shown, Deck PL D Similar)

DECK PLATE B

ALT FRICTION PATTERN (See Note 2)

1:20

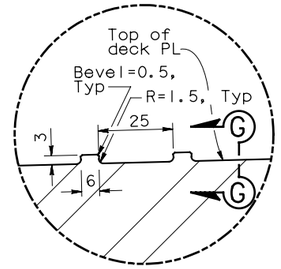

DETAIL G

1:1

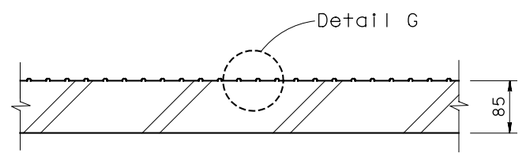

SECTION F-F

1:5

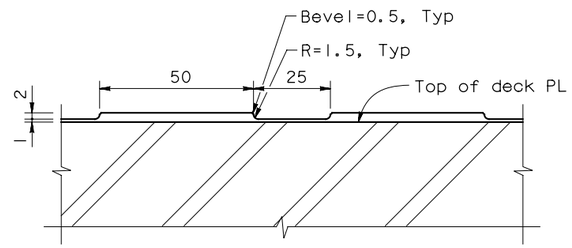

SECTION G-G

1:1

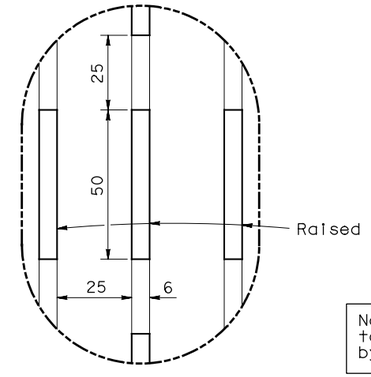

DETAIL H

1:1

Note: Hinge KE & KW Expansion Joints to be furnished by others and installed by the Contractor.

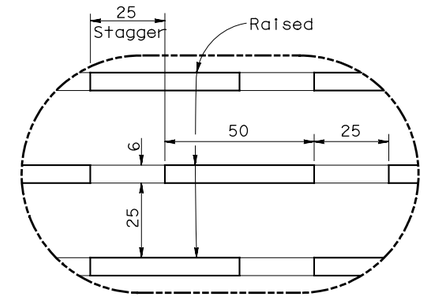

DETAIL H'

1:1

NOTES:

1. For Details not shown, see "Hinge KE & KW Expansion Joint Details No.3" sheet.
2. Friction pattern type shall be selected as directed by the Engineer. Polymer/Aggregate Skid Coat (PASC) may be applied per Engineer's direction.

SUPPLEMENTAL SHEET

CONTRACT CHANGE ORDER NO. _____
SHEET ____ OF ____

SAN FRANCISCO OAKLAND BAY BRIDGE
EAST SPAN SEISMIC SAFETY PROJECT

YBI TRANSITION STRUCTURES - HINGE K

SEISMIC JOINT (TYPE II)

HINGE KE & KW EXPANSION JOINT DETAILS NO.4

Caltrans Metric

MARK	DATE	DESCRIPTIONS	BY	CH'D	CCO#
		REVISIONS			

ALL DIMENSIONS ARE IN MILLIMETERS UNLESS OTHERWISE SHOWN

	BY	CHECKED
DESIGN	R MAGGENTI	M WHITESIDE
DETAILS	R MAGGENTI	M WHITESIDE
QUANTITIES	R MAGGENTI	M WHITESIDE

ORIGINAL SCALE IN MILLIMETERS FOR REDUCED PLANS 0 10 20 30 40 50 60 70 80 90 100

STATE OF CALIFORNIA DEPARTMENT OF TRANSPORTATION

DIVISION OF ENGINEERING SERVICES STRUCTURE DESIGN

SPECIAL DESIGNS BRANCH

CU 04
EA 0120F1

BRIDGE NO. 34-0006 L/R
KILOMETER POST 12.8

DISREGARD PRINTS BEARING EARLIER REVISION DATES

REVISION DATES

SHEET K151A OF 209

Jan 6, 2012

DATE PLOTTED => 1/12/2012
TIME PLOTTED => 41 17:57 PM

FILE => spec_des_br_proj/04-0120S1/2007sd/P:\4141-06\CADD\TS\Checked Plans\YBITS #1-100% No. 2_03-03-08 (Final Renamed)\011212 H

DIST.	COUNTY	ROUTE	KILOMETER POST TOTAL PROJECT	SHEET NO.	TOTAL SHEETS
04	SF	80	12.7/13.2	K701A	806

Caltrans Metric

REGISTERED ENGINEER - CIVIL

01/20/2012

PLANS APPROVAL DATE

REGISTERED PROFESSIONAL ENGINEER Marwan N. Nader No. C 054426 Exp. 12/31/13 CIVIL STATE OF CALIFORNIA

The State of California or its officers or agents shall not be responsible for the accuracy or completeness of electronic copies of this plan sheet.

T.Y. LIN / MOFFATT & NICHOL
TWO HARRISON STREET
SAN FRANCISCO, CA 94105

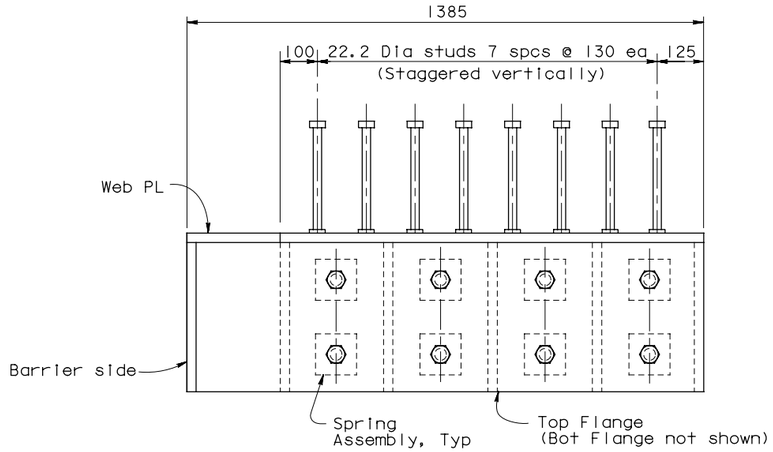

PLAN - BUILT UP CHANNEL ASSEMBLY "A"

NTS

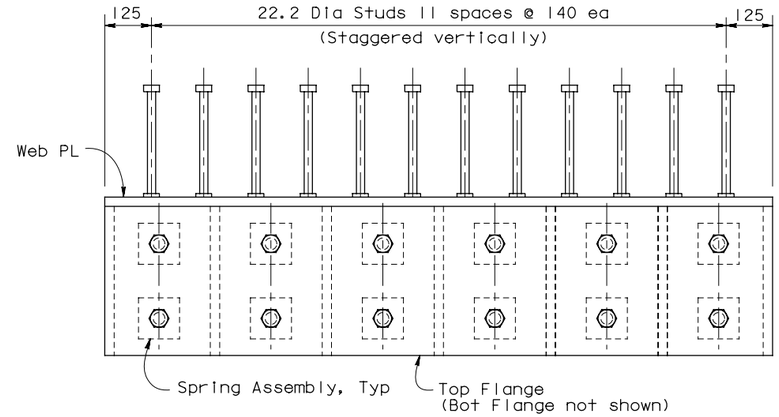

PLAN - BUILT UP CHANNEL ASSEMBLY "B"

NTS

Note: Hinge KE & KW Expansion Joints to be furnished by others and installed by the Contractor.

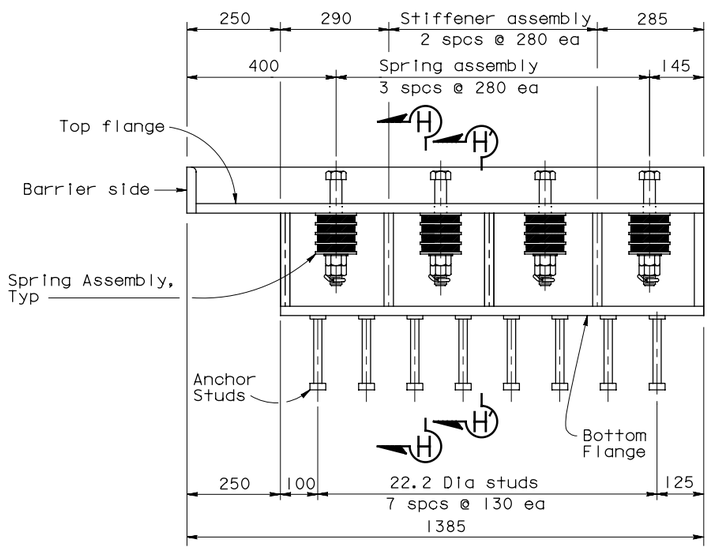

ELEVATION - BUILT UP CHANNEL ASSEMBLY "A"

NTS

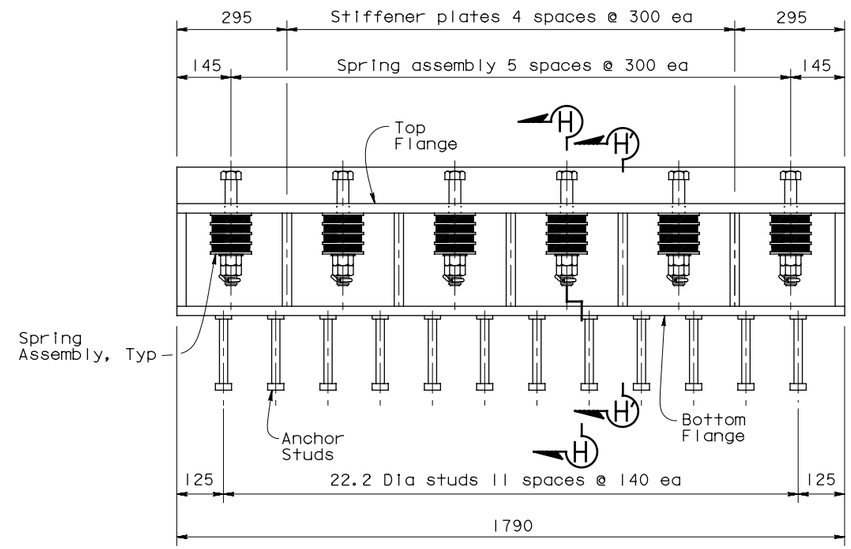

ELEVATION - BUILT UP CHANNEL ASSEMBLY "B"

NTS

SUPPLEMENTAL SHEET

CONTRACT CHANGE ORDER NO. _____
SHEET ____ OF ____

NOTES:

1. For Sections H-H and H'-H', see "Hinge KE & KW Expansion Joint Details No.6" sheet.

ALL DIMENSIONS ARE IN MILLIMETERS UNLESS OTHERWISE SHOWN

SAN FRANCISCO OAKLAND BAY BRIDGE
EAST SPAN SEISMIC SAFETY PROJECT

YBI TRANSITION STRUCTURES - HINGE K

HINGE KE & KW EXPANSION JOINT DETAILS NO.5

DESIGN	BY C. Redfield	CHECKED M. Nader	
DETAILS	BY H. Patel	CHECKED J. Duxbury	
QUANTITIES	BY H. Patel	CHECKED J. Duxbury	

DESIGN OVERSIGHT ADE AKINSANYA

SIGN OFF DATE

Rev. Date: 5-18-98

PREPARED FOR THE STATE OF CALIFORNIA DEPARTMENT OF TRANSPORTATION

Jal Birdy
PROJECT ENGINEER

BRIDGE NO. 34-0006 L/R
KILOMETER POST 12.8

CU 04
EA 0120F1

DISREGARD PRINTS BEARING EARLIER REVISION DATES

REVISION DATES (PRELIMINARY STAGE ONLY)

SHEET K152A OF 209

ORIGINAL SCALE IN MILLIMETERS FOR REDUCED PLANS 0 10 20 30 40 50 60 70 80 90 100

FILE => P:\4141-06\CADD\TS\Checked Plans\YBITS #1-100% No. 2_03-03-08 (Final Renamed)\011212 Hinge K SAS T19 CCO\TYLin sheets\04-01

Jan 6, 2012

USERNAME => fsamson DATE PLOTTED => 1/12/2012 TIME PLOTTED => 4:18:07 PM

DIST.	COUNTY	ROUTE	KILOMETER POST TOTAL PROJECT	SHEET NO.	TOTAL SHEETS
04	SF	80	12.7/13.2	K702A	806

Caltrans Metric

REGISTERED ENGINEER - CIVIL
01/20/2012
PLANS APPROVAL DATE

REGISTERED PROFESSIONAL ENGINEER Marwan N. Nader No. C 054426 Exp. 12/31/13 CIVIL STATE OF CALIFORNIA

The State of California or its officers or agents shall not be responsible for the accuracy or completeness of electronic copies of this plan sheet.

T.Y. LIN / MOFFATT & NICHOL
TWO HARRISON STREET
SAN FRANCISCO, CA 94105

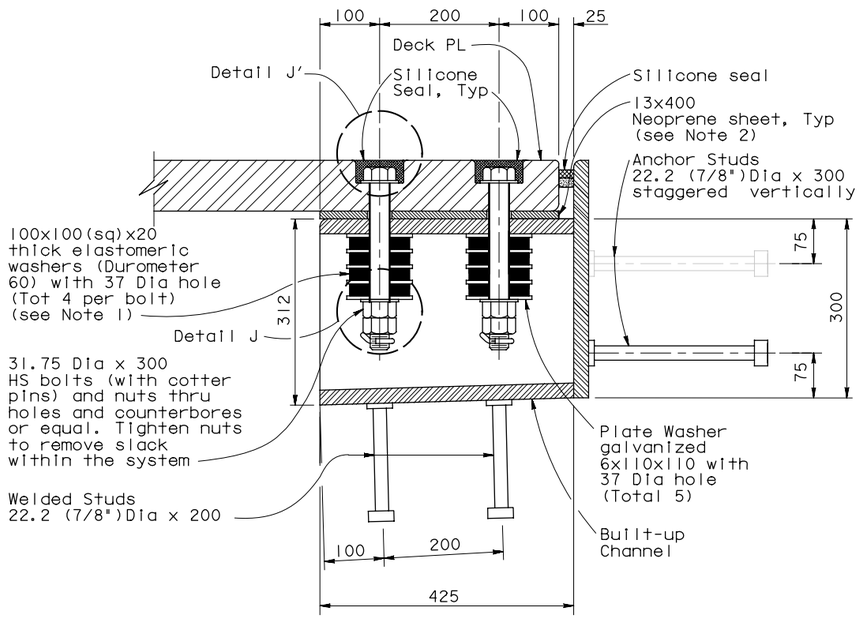

SECTION H-H
NTS

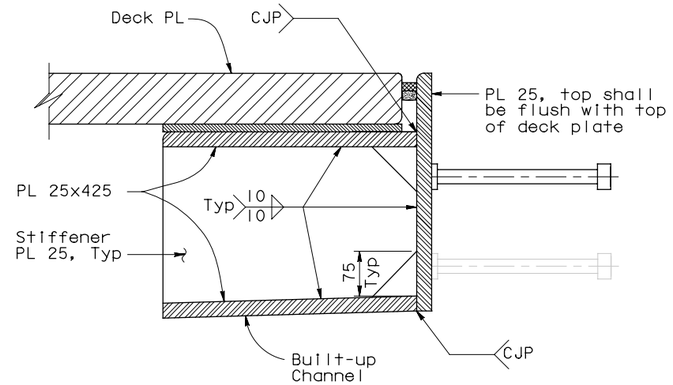

SECTION H'-H'
NTS

Note: Hinge KE & KW Expansion Joints to be furnished by others and installed by the Contractor.

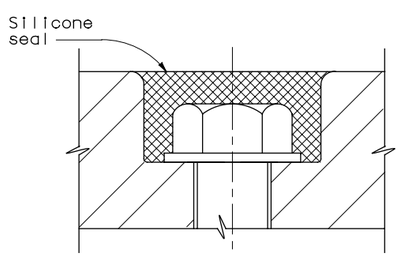

DETAIL J'
NTS

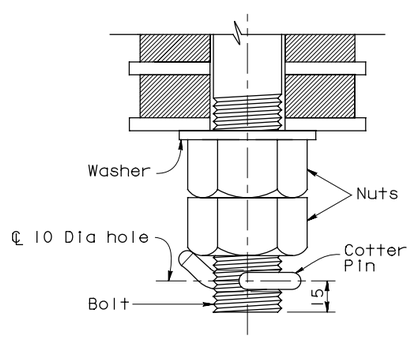

DETAIL J
NTS

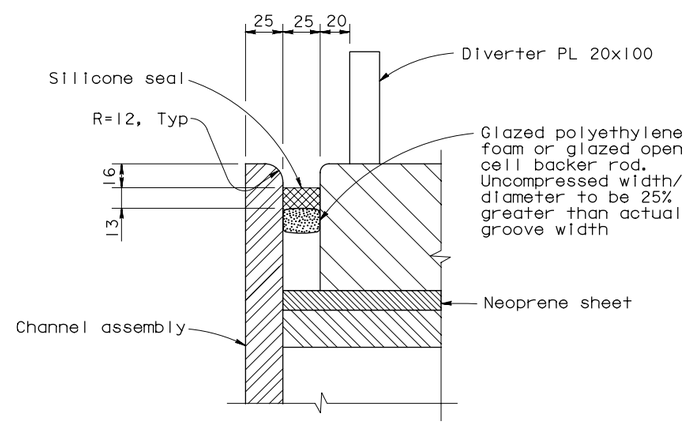

DETAIL L
NTS

NOTES:

1. Elastomeric washers shall be plain neoprene.
2. The length of the 13x400 mm neoprene sheet below the deck plate is 1360 mm and 1790 mm long for modules "A" and "B" respectively.

SUPPLEMENTAL SHEET

CONTRACT CHANGE ORDER NO. _____
SHEET ____ OF ____

ALL DIMENSIONS ARE IN MILLIMETERS UNLESS OTHERWISE SHOWN

SAN FRANCISCO OAKLAND BAY BRIDGE
EAST SPAN SEISMIC SAFETY PROJECT

YBI TRANSITION STRUCTURES - HINGE K

HINGE KE & KW EXPANSION JOINT DETAILS NO.6

DESIGN OVERSIGHT ADE AKINSANYA
SIGN OFF DATE
Rev. Date: 5-18-98

	BY		CHECKED	
DESIGN	BY	C. Redfield	CHECKED	M. Nader
DETAILS	BY	H. Patel	CHECKED	J. Duxbury
QUANTITIES	BY	H. Patel	CHECKED	J. Duxbury

PREPARED FOR THE STATE OF CALIFORNIA DEPARTMENT OF TRANSPORTATION

Jal Birdy
PROJECT ENGINEER

BRIDGE NO. 34-0006 L/R
KILOMETER POST 12.8

ORIGINAL SCALE IN MILLIMETERS FOR REDUCED PLANS 0 10 20 30 40 50 60 70 80 90 100

CU 04
EA 0120F1

DISREGARD PRINTS BEARING EARLIER REVISION DATES

REVISION DATES (PRELIMINARY STAGE ONLY)

SHEET K153A OF 209

Jan 6, 2012

TIME PLOTTED => 4:18:15 PM
DATE PLOTTED => 1/12/2012
USERNAME => fsamson

FILE => P:\4141-06\CADD\TS\Checked Plans\YBITS #1-100% No. 2_03-03-08 (Final Renamed)\011212 Hinge K SAS T19 CCO\TYLin sheets\04-01

DIST.	COUNTY	ROUTE	KILOMETER POST TOTAL PROJECT	SHEET NO.	TOTAL SHEETS
04	SF	80	12.7/13.2	K703A	806

REGISTERED ENGINEER - CIVIL
01/20/2012
PLANS APPROVAL DATE

REGISTERED PROFESSIONAL ENGINEER Marwan N. Nader No. C 054426 Exp. 12/31/13 CIVIL STATE OF CALIFORNIA

The State of California or its officers or agents shall not be responsible for the accuracy or completeness of electronic copies of this plan sheet.

T.Y. LIN / MOFFATT & NICHOL
TWO HARRISON STREET
SAN FRANCISCO, CA 94105

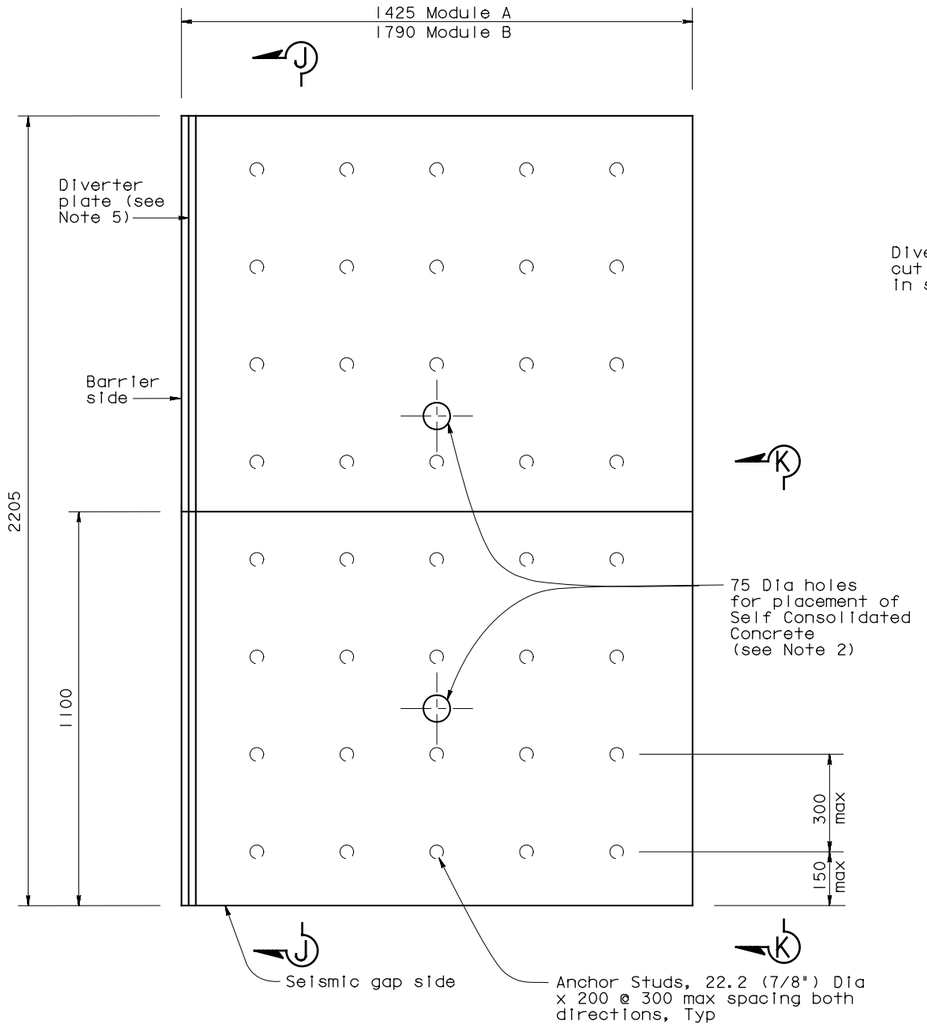

PLAN-SUPPORT PLATE
NTS

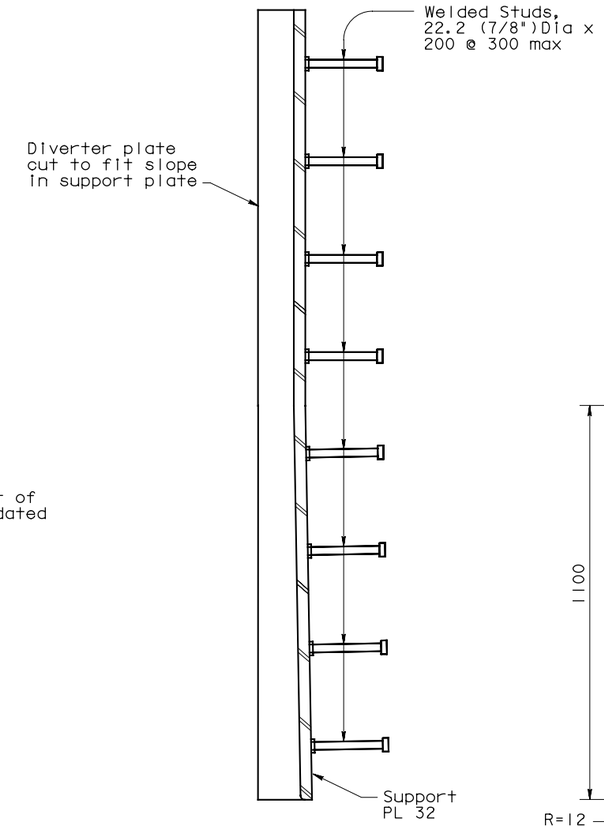

SECTION J-J
NTS

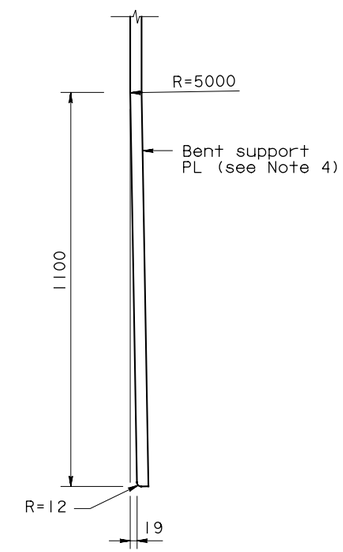

SECTION K-K
NTS

Note: Hinge KE & KW Expansion Joints to be furnished by others and installed by the Contractor.

NOTES:

1. Support Plate A shown, Support Plate B similar.
2. Exact location of 75 Dia holes to be determined prior to support plate fabrication.
3. Anchor holes for Trelleborg Transflex 2400 and Trelleborg Support Bar connection not shown. Coordinate anchor hole location with Transflex modules.
4. At the Contractor's option, the support plate may be machined in lieu of bending.
5. For diverter plate details see "Hinge KE & KW Expansion Joint Details No.3" sheet. Diverter plate applies only to support plate A.

SUPPLEMENTAL SHEET

CONTRACT CHANGE ORDER NO. _____
SHEET ____ OF ____

ALL DIMENSIONS ARE IN MILLIMETERS UNLESS OTHERWISE SHOWN

SAN FRANCISCO OAKLAND BAY BRIDGE
EAST SPAN SEISMIC SAFETY PROJECT

YBI TRANSITION STRUCTURES - HINGE K

HINGE KE & KW EXPANSION JOINT DETAILS NO.7

DESIGN OVERSIGHT
ADE AKINSANYA
SIGN OFF DATE
Rev. Date: 5-18-98

	BY		CHECKED	
DESIGN	BY	C. Redfield	CHECKED	M. Nader
DETAILS	BY	H. Patel	CHECKED	J. Duxbury
QUANTITIES	BY	H. Patel	CHECKED	J. Duxbury

PREPARED FOR THE STATE OF CALIFORNIA DEPARTMENT OF TRANSPORTATION

Jal Birdy
PROJECT ENGINEER

BRIDGE NO. 34-0006 L/R
KILOMETER POST 12.8

CU 04
EA 0120F1

DISREGARD PRINTS BEARING EARLIER REVISION DATES

REVISION DATES (PRELIMINARY STAGE ONLY)

SHEET K154A OF 209

ORIGINAL SCALE IN MILLIMETERS FOR REDUCED PLANS 0 10 20 30 40 50 60 70 80 90 100

FILE => P:\4141-06\CADD\TS\Checked Plans\YBITS #1-100% No. 2_03-03-08 (Final Renamed)\011212 Hinge K SAS T19 CCO\TYLin sheets\04-0

USERNAME => fsamson DATE PLOTTED => 1/12/2012 TIME PLOTTED => 4:18:28 PM

Jan 6, 2012

DIST.	COUNTY	ROUTE	KILOMETER POST TOTAL PROJECT	SHEET NO.	TOTAL SHEETS
04	SF	80	12.7/13.2	K704A	806

REGISTERED ENGINEER - CIVIL
01/20/2012
PLANS APPROVAL DATE

REGISTERED PROFESSIONAL ENGINEER Marwan N. Nader No. C 054426 Exp. 12/31/13 CIVIL STATE OF CALIFORNIA

The State of California or its officers or agents shall not be responsible for the accuracy or completeness of electronic copies of this plan sheet.

T.Y. LIN / MOFFATT & NICHOL
TWO HARRISON STREET
SAN FRANCISCO, CA 94105

Caltrans Metric

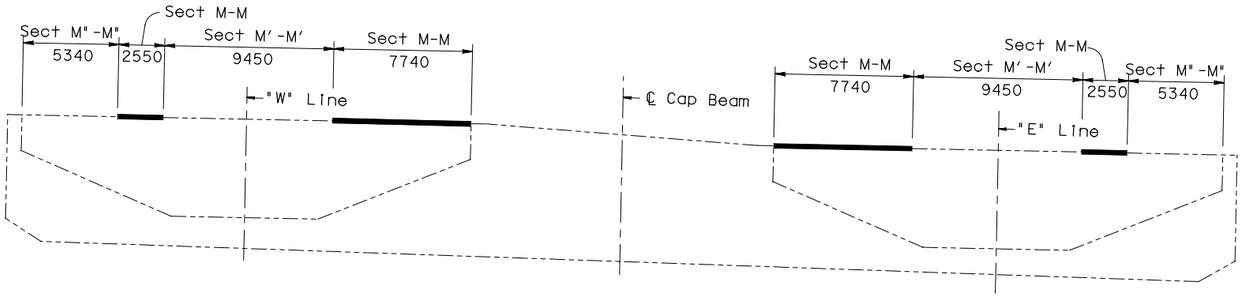

LOCATION - SECTION M-M

NTS

Note: Hinge KE & KW Expansion Joints to be furnished by others and installed by the Contractor.

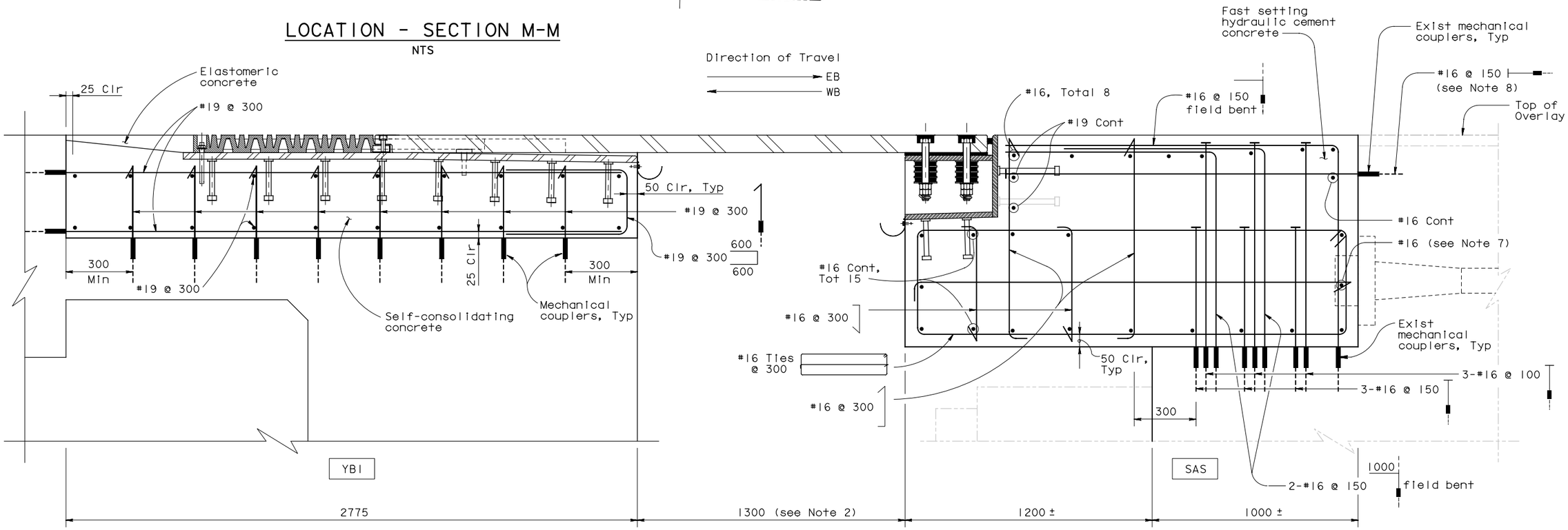

SECTION M-M

1:10

LEGEND:

|— Indicates "T" head reinforcement.

NOTES:

1. Rebars with mechanical couplers shall extend beyond blockout limits by at least 50 db.
2. Values are for mean temperature of 20°C.
3. Contractor shall locate all existing mechanical couplers.
4. Contractor shall connect reinforcement to existing rebar couplers at blockout limits.
5. Rebars may be relocated to match existing couplers.
6. Mechanical couplers at SAS side provided by Others.
7. Rebar shall be discontinued 25 mm clear of postensionong hardware.
8. Rebar may be bent horizontally to clear anchor studs on channel assembly.

SUPPLEMENTAL SHEET

CONTRACT CHANGE ORDER NO. _____
SHEET ____ OF ____

ALL DIMENSIONS ARE IN MILLIMETERS UNLESS OTHERWISE SHOWN

SAN FRANCISCO OAKLAND BAY BRIDGE
EAST SPAN SEISMIC SAFETY PROJECT

YBI TRANSITION STRUCTURES - HINGE K

HINGE KE & KW EXPANSION JOINT DETAILS NO.8

DESIGN OVERSIGHT
ADE AKINSANYA
SIGN OFF DATE

	BY		CHECKED	
DESIGN	BY	C. Redfield	CHECKED	M. Nader
DETAILS	BY	H. Patel	CHECKED	J. Duxbury
QUANTITIES	BY	H. Patel	CHECKED	J. Duxbury

PREPARED FOR THE STATE OF CALIFORNIA DEPARTMENT OF TRANSPORTATION

Jal Birdy
PROJECT ENGINEER

BRIDGE NO. 34-0006 L/R
KILOMETER POST 12.8

Rev. Date: 5-18-98

ORIGINAL SCALE IN MILLIMETERS FOR REDUCED PLANS 0 10 20 30 40 50 60 70 80 90 100

CU 04
EA 0120F1

DISREGARD PRINTS BEARING EARLIER REVISION DATES

REVISION DATES (PRELIMINARY STAGE ONLY)

SHEET K155A OF 209

FILE => P:\4141-06\CADD\TS\Checked Plans\YBITS #1-100% No. 2_03-03-08 (Final Renamed)\011212 Hinge K SAS T19 CCO\TYLin sheets\04-01

Jan 6, 2012

USERNAME => fsamson DATE PLOTTED => 1/12/2012 TIME PLOTTED => 4:18:37 PM

DIST.	COUNTY	ROUTE	KILOMETER POST TOTAL PROJECT	SHEET NO.	TOTAL SHEETS
04	SF	80	12.7/13.2	K705A	806

REGISTERED ENGINEER - CIVIL
01/20/2012
PLANS APPROVAL DATE
The State of California or its officers or agents shall not be responsible for the accuracy or completeness of electronic copies of this plan sheet.

REGISTERED PROFESSIONAL ENGINEER Marwan N. Nader No. C 054426 Exp. 12/31/13 CIVIL STATE OF CALIFORNIA

T.Y. LIN / MOFFATT & NICHOL
TWO HARRISON STREET
SAN FRANCISCO, CA 94105

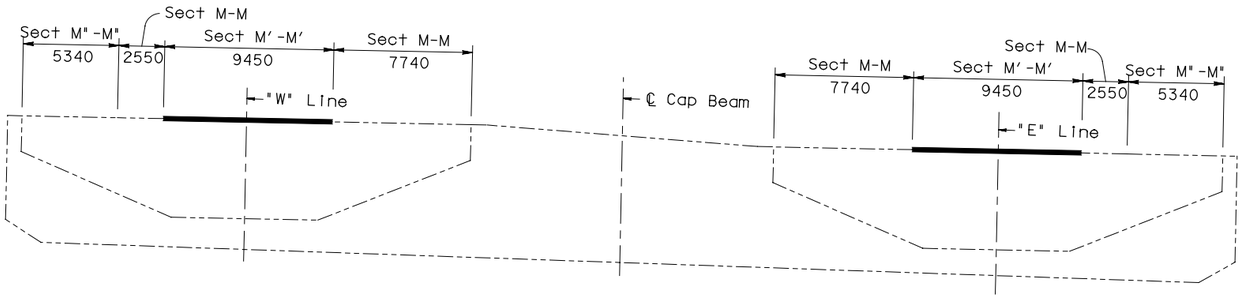

Note: Hinge KE & KW Expansion Joints to be furnished by others and installed by the Contractor.

LOCATION - SECTION M'-M'

NTS

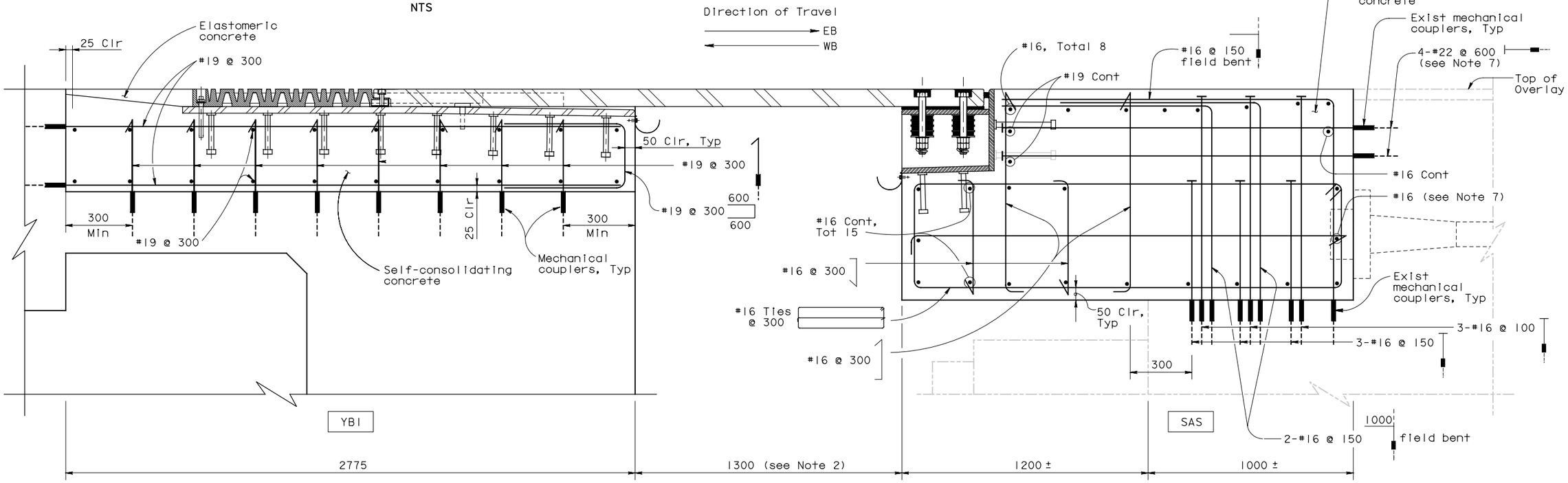

SECTION M'-M'

1:10

LEGEND:

|—— Indicates "T" head reinforcement.

NOTES:

1. Rebars with mechanical couplers shall extend beyond blockout limits by at least 50 d_b.
2. Values are for mean temperature 20°C.
3. Contractor shall locate all existing mechanical couplers.
4. Contractor shall connect reinforcement to existing rebar couplers at blockout limits.
5. Rebars may be relocated to match existing couplers.
6. Mechanical couplers at SAS side provided by Others.
7. At locations where the spacing between continuity tendons is 500 mm or less, 2-#22 bars may be placed vertically. Rebar may be bent horizontally to clear anchor studs on channel assembly.
8. Rebar shall be discontinued 25 mm clear of postensioning hardware.

SUPPLEMENTAL SHEET

CONTRACT CHANGE ORDER NO. _____
SHEET ____ OF ____

ALL DIMENSIONS ARE IN MILLIMETERS UNLESS OTHERWISE SHOWN

SAN FRANCISCO OAKLAND BAY BRIDGE
EAST SPAN SEISMIC SAFETY PROJECT

YBI TRANSITION STRUCTURES - HINGE K

HINGE KE & KW EXPANSION JOINT DETAILS NO. 9

DESIGN OVERSIGHT ADE AKINSANYA	DESIGN	BY C. Redfield	CHECKED M. Nader
SIGN OFF DATE	DETAILS	BY H. Patel	CHECKED J. Duxbury
Rev. Date: 5-18-98	QUANTITIES	BY H. Patel	CHECKED J. Duxbury

PREPARED FOR THE STATE OF CALIFORNIA DEPARTMENT OF TRANSPORTATION

Jal Birdy
PROJECT ENGINEER

BRIDGE NO. 34-0006 L/R
KILOMETER POST 12.8

ORIGINAL SCALE IN MILLIMETERS FOR REDUCED PLANS 0 10 20 30 40 50 60 70 80 90 100

CU 04
EA 0120F1

DISREGARD PRINTS BEARING EARLIER REVISION DATES

REVISION DATES (PRELIMINARY STAGE ONLY)

SHEET K156A OF 209

FILE => P:\4141-06\CADD\TS\Checked Plans\YBITS #1-100% No. 2_03-03-08 (Final Renamed)\011212 Hinge K SAS T19 CCO\TYLin sheets\04-01

Jan 6, 2012

USERNAME => fsamson DATE PLOTTED => 1/12/2012 TIME PLOTTED => 4:18:44 PM

DIST.	COUNTY	ROUTE	KILOMETER POST TOTAL PROJECT	SHEET NO.	TOTAL SHEETS
04	SF	80	12.7/13.2	K705AA	806

REGISTERED ENGINEER - CIVIL
01/20/2012
PLANS APPROVAL DATE

REGISTERED PROFESSIONAL ENGINEER Marwan N. Nader No. C 054426 Exp. 12/31/13 CIVIL STATE OF CALIFORNIA

The State of California or its officers or agents shall not be responsible for the accuracy or completeness of electronic copies of this plan sheet.

T.Y. LIN / MOFFATT & NICHOL
TWO HARRISON STREET
SAN FRANCISCO, CA 94105

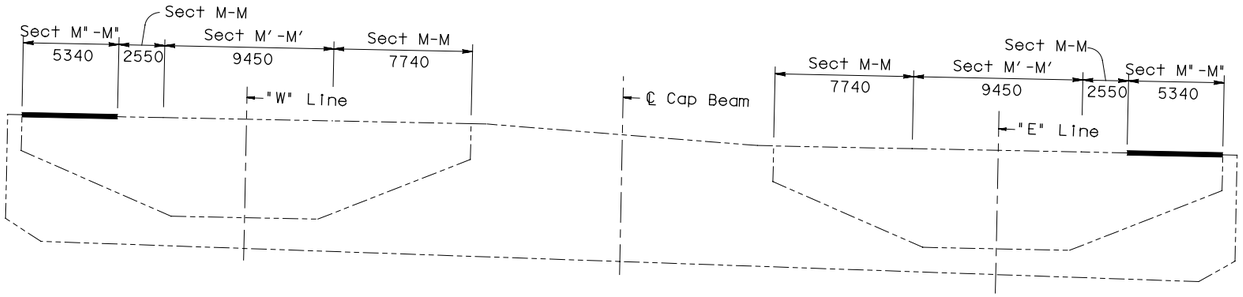

Note: Hinge KE & KW Expansion Joints to be furnished by others and installed by the Contractor.

LOCATION - SECTION M"-M"

NTS

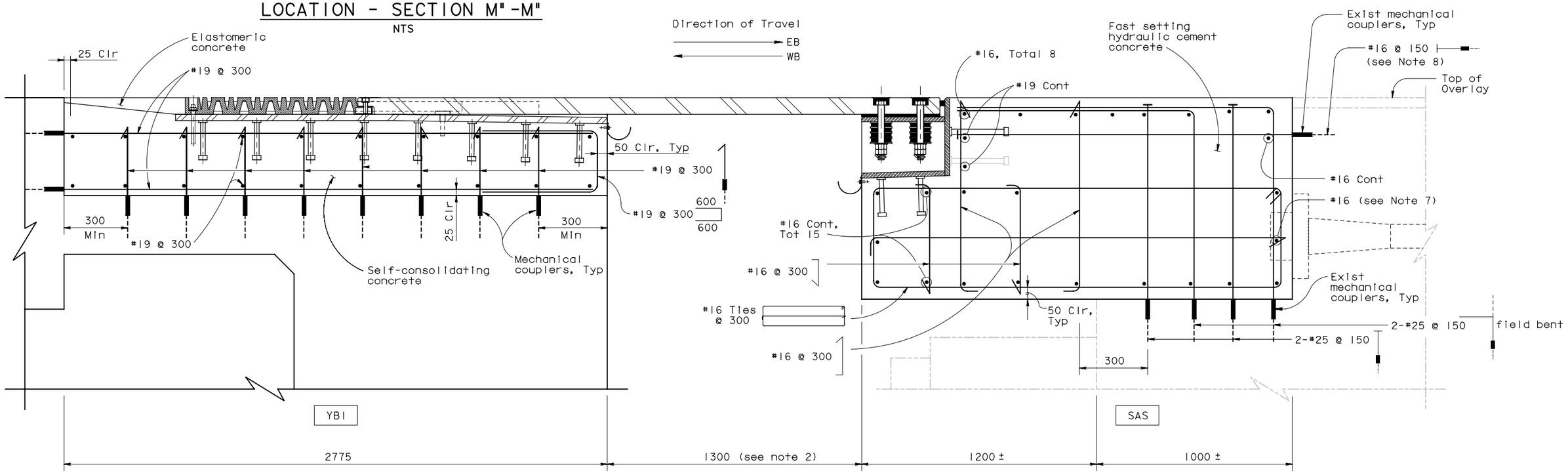

SECTION M"-M"

1:10

LEGEND:

|— Indicates "T" head reinforcement.

NOTES:

1. Rebars with mechanical couplers shall extend beyond blockout limits by at least 50 d_b.
2. Values are for mean temperature 20°C.
3. Contractor shall locate all existing mechanical couplers.
4. Contractor shall connect reinforcement to existing rebar couplers at blockout limits.
5. Rebars may be relocated to match existing couplers.
6. Mechanical couplers at SAS side provided by Others.
7. Rebar shall be discontinued 25 mm clear of postensionong hardware.
8. Rebar may be bent horizontally to clear anchor studs on channel assembly.

SUPPLEMENTAL SHEET

CONTRACT CHANGE ORDER NO. _____
SHEET ____ OF ____

ALL DIMENSIONS ARE IN MILLIMETERS UNLESS OTHERWISE SHOWN

SAN FRANCISCO OAKLAND BAY BRIDGE
EAST SPAN SEISMIC SAFETY PROJECT

YBI TRANSITION STRUCTURES - HINGE K

HINGE KE & KW EXPANSION JOINT DETAILS NO. 10

DESIGN OVERSIGHT ADE AKINSANYA	DESIGN	BY C. Redfield	CHECKED M. Nader	PREPARED FOR THE STATE OF CALIFORNIA DEPARTMENT OF TRANSPORTATION
SIGN OFF DATE	DETAILS	BY H. Patel	CHECKED J. Duxbury	
	QUANTITIES	BY H. Patel	CHECKED J. Duxbury	

Jal Birdy
PROJECT ENGINEER

BRIDGE NO. 34-0006 L/R
KILOMETER POST 12.8

CU 04
EA 0120F1

DISREGARD PRINTS BEARING EARLIER REVISION DATES

REVISION DATES (PRELIMINARY STAGE ONLY)

SHEET K156AA OF 209

Rev. Date: 5-18-98

ORIGINAL SCALE IN MILLIMETERS FOR REDUCED PLANS 0 10 20 30 40 50 60 70 80 90 100

FILE => P:\4141-06\CADD\TS\Checked Plans\YBITS #1-100% No. 2_03-03-08 (Final Renamed)\011212 Hinge K SAS T19 CCO\TYLin sheets\04-01

Jan 6, 2012

USERNAME => fsamson DATE PLOTTED => 1/12/2012 TIME PLOTTED => 4:18:54 PM

DIST.	COUNTY	ROUTE	KILOMETER POST TOTAL PROJECT	SHEET NO.	TOTAL SHEETS
04	SF	80	12.7/13.2	K705BA	806

Caltrans Metric

REGISTERED ENGINEER - CIVIL

01/20/2012

PLANS APPROVAL DATE

REGISTERED PROFESSIONAL ENGINEER Marwan N. Nader No. C 054426 Exp. 12/31/13 CIVIL STATE OF CALIFORNIA

The State of California or its officers or agents shall not be responsible for the accuracy or completeness of electronic copies of this plan sheet.

T.Y. LIN / MOFFATT & NICHOL
TWO HARRISON STREET
SAN FRANCISCO, CA 94105

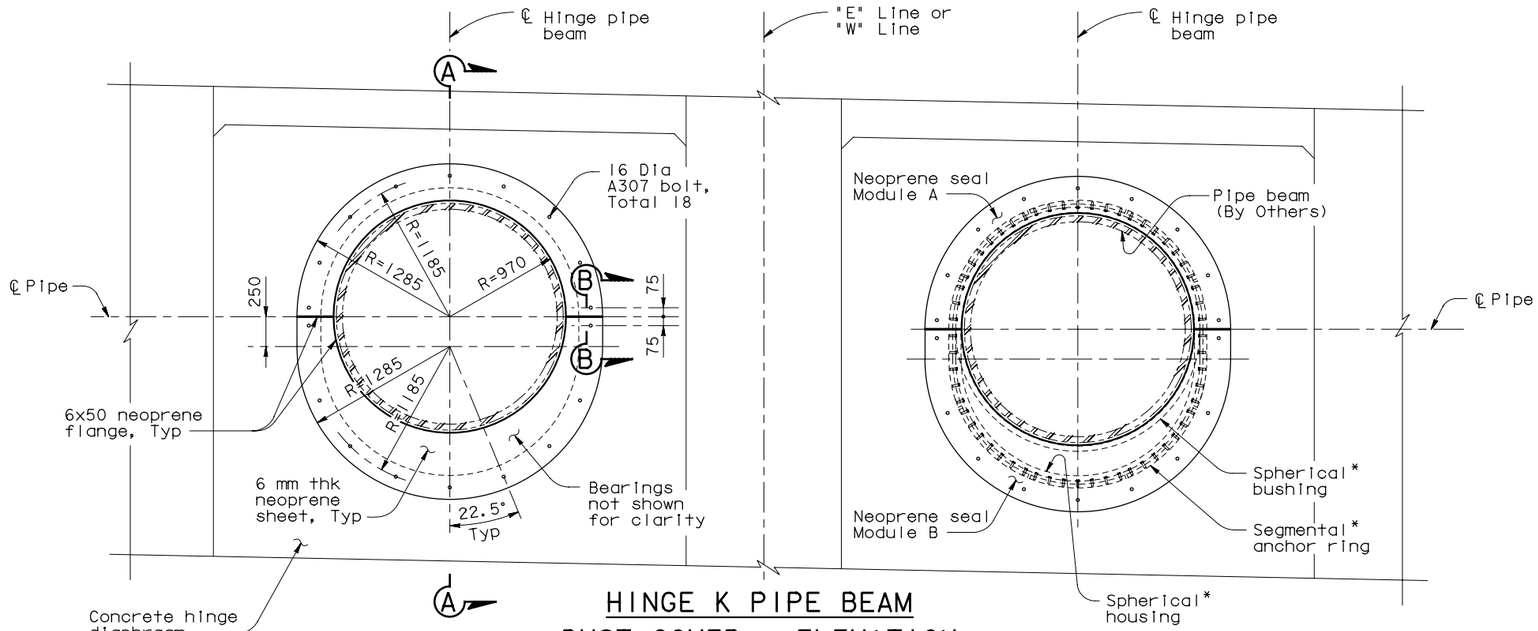

HINGE K PIPE BEAM DUST COVER - ELEVATION

1:25

(WB Shown, EB Similar)

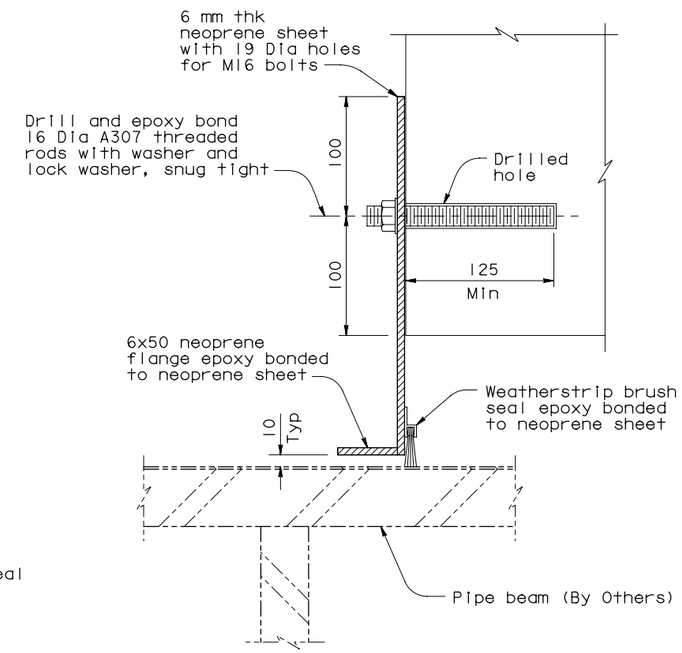

DETAIL A (Detail A' Similar)

1:2.5

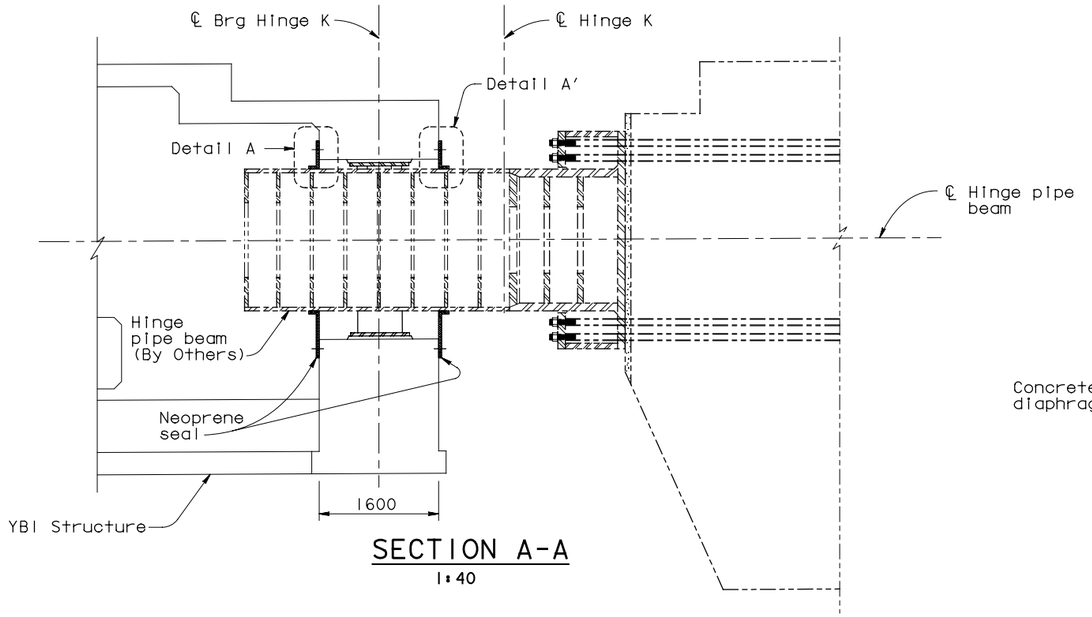

SECTION A-A

1:40

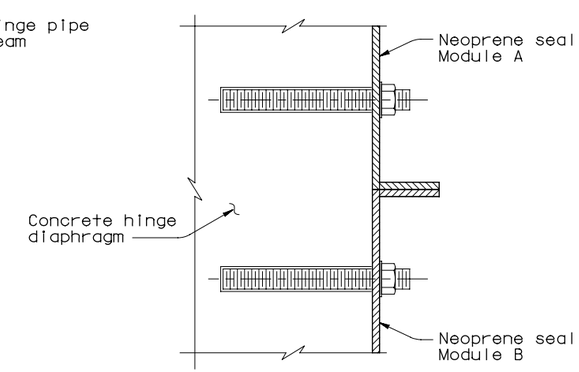

SECTION B-B

1:2.5

NOTES:

* Furnished by Others; Erection in this contract.

SUPPLEMENTAL SHEET

CONTRACT CHANGE ORDER NO. _____
SHEET ____ OF ____

SAN FRANCISCO OAKLAND BAY BRIDGE
EAST SPAN SEISMIC SAFETY PROJECT

YBI TRANSITION STRUCTURES - HINGE K

HINGE K PIPE BEAM DUST COVER DETAILS

DESIGN OVERSIGHT ADE AKINSANYA	DESIGN	BY N. Vo	CHECKED M. Nader	PREPARED FOR THE STATE OF CALIFORNIA DEPARTMENT OF TRANSPORTATION
SIGN OFF DATE	DETAILS	BY H. Patel	CHECKED J. Duxbury	Jal Birdy, PROJECT ENGINEER
Rev. Date: 5-18-98	QUANTITIES	BY H. Patel	CHECKED J. Duxbury	CU 04 EA 0120F1

BRIDGE NO. 34-0006 L/R
KILOMETER POST 12.8

ORIGINAL SCALE IN MILLIMETERS FOR REDUCED PLANS 0 10 20 30 40 50 60 70 80 90 100

DISREGARD PRINTS BEARING EARLIER REVISION DATES

REVISION DATES (PRELIMINARY STAGE ONLY)

SHEET K156BA OF 209

FILE => P:\4141-06\CADD\TS\Checked Plans\YBITS #1-100% No. 2_03-03-08 (Final Renamed)\011212 Hinge K SAS T19 CCO\TYLin sheets\04-01

Jan 6, 2012

USERNAME => fsamson DATE PLOTTED => 1/12/2012 TIME PLOTTED => 4:19:02 PM

DIST.	COUNTY	ROUTE	KILOMETER POST TOTAL PROJECT	SHEET NO.	TOTAL SHEETS
04	SF	80	12.7/13.2	K708A	806

REGISTERED ENGINEER - CIVIL
01/20/2012
PLANS APPROVAL DATE

REGISTERED PROFESSIONAL ENGINEER A.L. ELY No. 18880 Exp. 6-30-13 CIVIL STATE OF CALIFORNIA

The State of California or its officers or agents shall not be responsible for the accuracy or completeness of electronic copies of this plan sheet.

T.Y. LIN / MOFFATT & NICHOL
TWO HARRISON STREET
SAN FRANCISCO, CA 94105

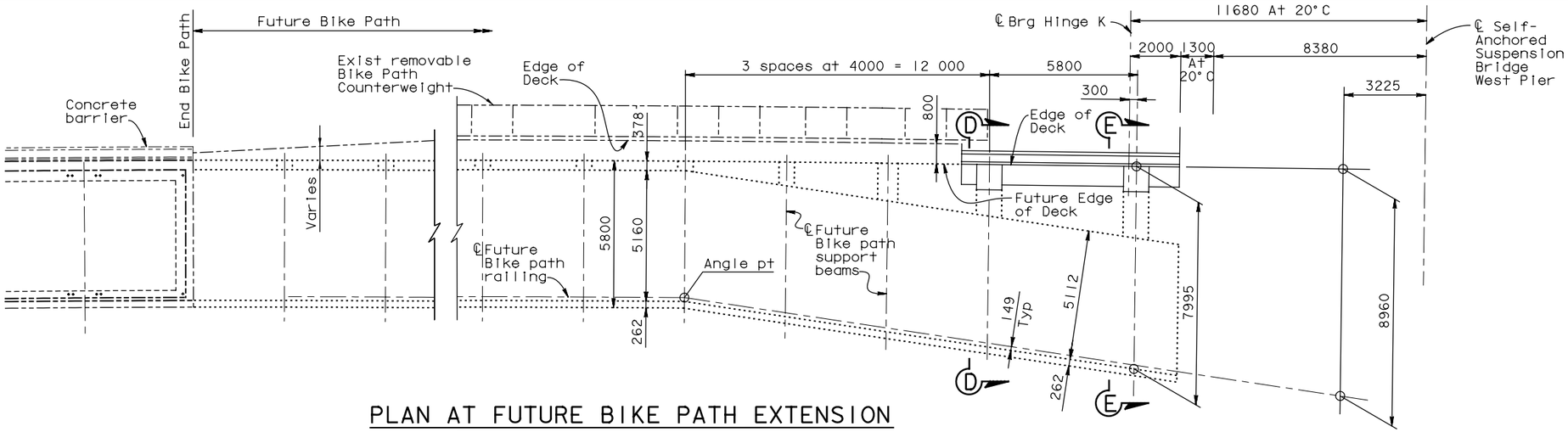

PLAN AT FUTURE BIKE PATH EXTENSION

1:100

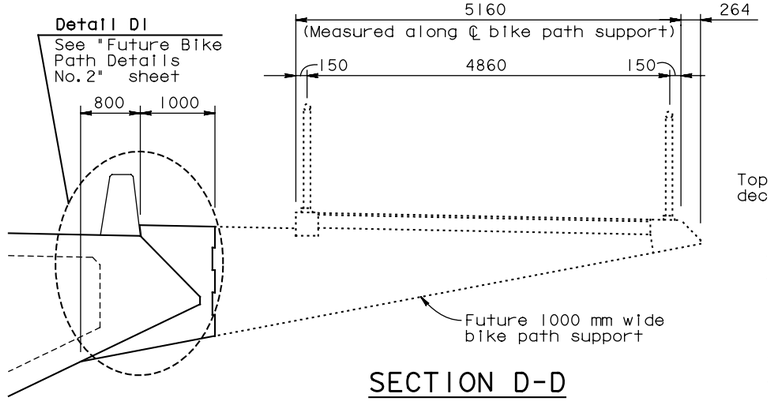

SECTION D-D

1:40

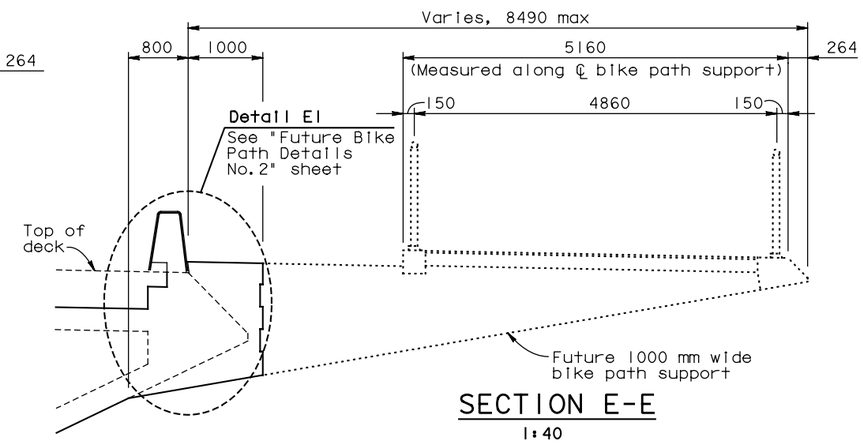

SECTION E-E

1:40

SUPPLEMENTAL SHEET

CONTRACT CHANGE ORDER NO. _____
SHEET ____ OF ____

ALL DIMENSIONS ARE IN MILLIMETERS UNLESS OTHERWISE SHOWN

SAN FRANCISCO OAKLAND BAY BRIDGE
EAST SPAN SEISMIC SAFETY PROJECT

YBI TRANSITION STRUCTURES - HINGE K

FUTURE BIKE PATH DETAILS NO. 1

DESIGN OVERSIGHT
ADE AKINSANYA
SIGN OFF DATE

	BY	CHECKED
DESIGN	Atiquilah	Ahn
DETAILS	van Ryn/Zucchi/Mai	Jain
QUANTITIES	Liao	E. Nichol

PREPARED FOR THE STATE OF CALIFORNIA DEPARTMENT OF TRANSPORTATION

Jai Birdy
PROJECT ENGINEER

BRIDGE NO. 34-0006 L/R
KILOMETER POST 12.8

Rev. Date: 5-18-98

ORIGINAL SCALE IN MILLIMETERS FOR REDUCED PLANS 0 10 20 30 40 50 60 70 80 90 100

CU 04
EA 0120F1

DISREGARD PRINTS BEARING EARLIER REVISION DATES

REVISION DATES (PRELIMINARY STAGE ONLY)

SHEET K159A OF 209

FILE => P:\4141-06\CADD\TS\Checked Plans\YBITS #1-100% No. 2_03-03-08 (Final Renamed)\010612 Hinge K SAS T19 CCO\04-0120f1-34-006r1-u-fbikpdt01.dgn

Jan 6, 2012

USERNAME => fsamson DATE PLOTTED => 1/5/2012 TIME PLOTTED => 5:23:51 PM

DIST.	COUNTY	ROUTE	KILOMETER POST TOTAL PROJECT	SHEET NO.	TOTAL SHEETS
04	SF	80	12.7/13.2	K710A	806

Caltrans Metric

REGISTERED ENGINEER - CIVIL
01/20/2012
PLANS APPROVAL DATE

REGISTERED PROFESSIONAL ENGINEER A.L. ELY No. 18880 Exp. 6-30-13 CIVIL STATE OF CALIFORNIA

The State of California or its officers or agents shall not be responsible for the accuracy or completeness of electronic copies of this plan sheet.

T.Y. LIN / MOFFATT & NICHOL
TWO HARRISON STREET
SAN FRANCISCO, CA 94105

Note: For location of Details D1 & E1, see "Future Bike Path Details No. 1" sheet.

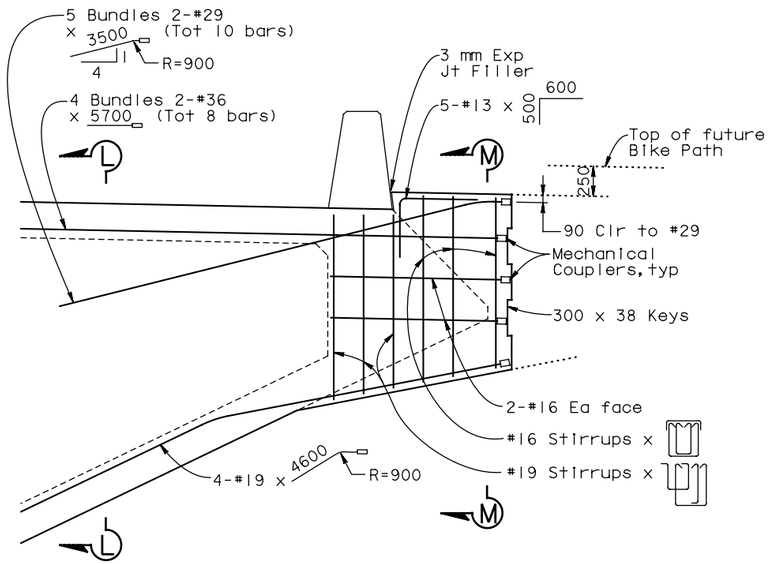

DETAIL D1
1:25

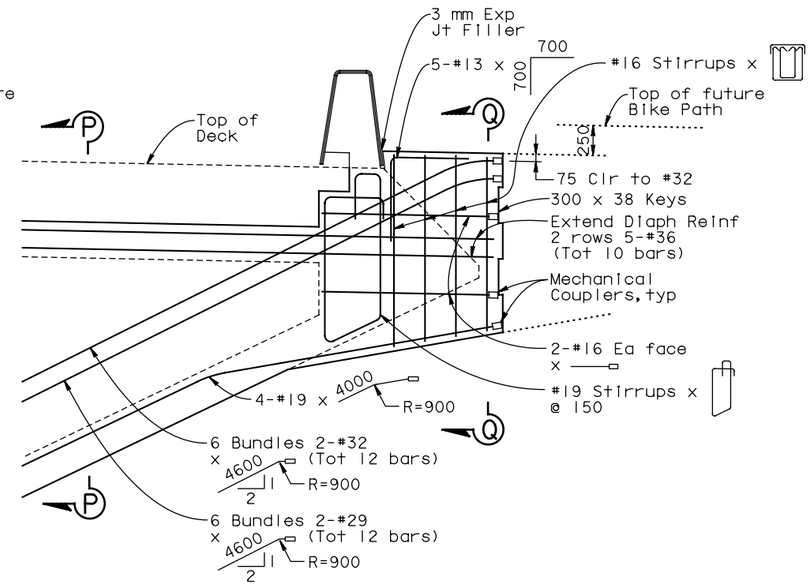

DETAIL E1
1:25

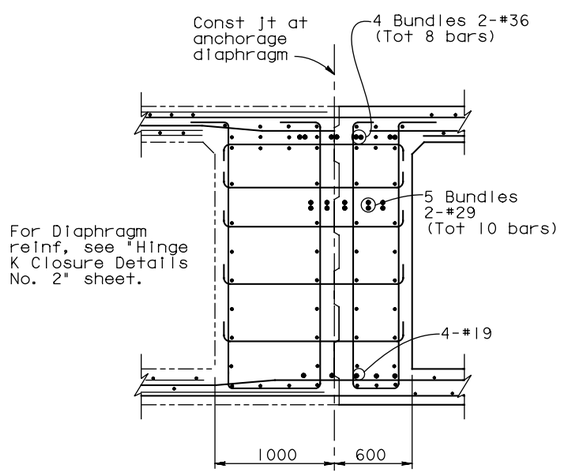

SECTION L-L
1:25

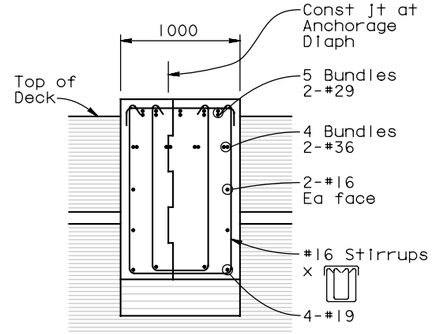

SECTION M-M
1:25

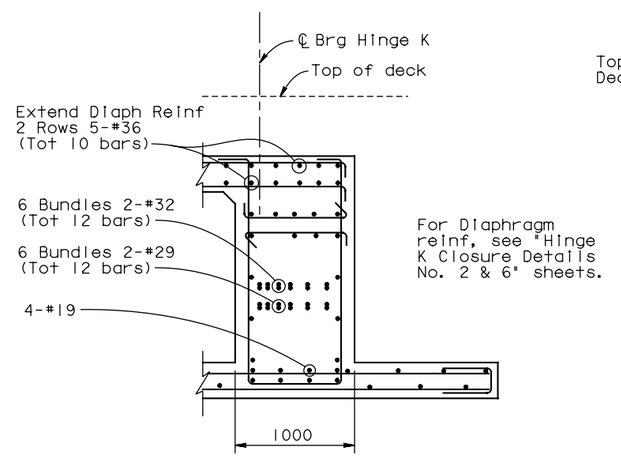

SECTION P-P
1:25

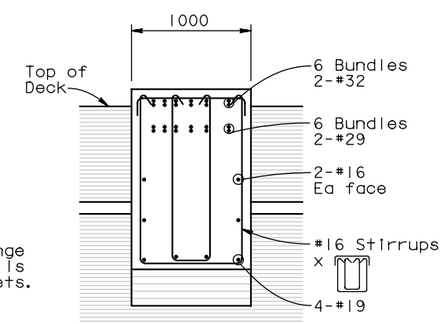

SECTION Q-Q
1:25

SUPPLEMENTAL SHEET

CONTRACT CHANGE ORDER NO. _____
SHEET ____ OF ____

ALL DIMENSIONS ARE IN MILLIMETERS UNLESS OTHERWISE SHOWN

SAN FRANCISCO OAKLAND BAY BRIDGE
EAST SPAN SEISMIC SAFETY PROJECT

YBI TRANSITION STRUCTURES - HINGE K

FUTURE BIKE PATH DETAILS NO. 2

DESIGN OVERSIGHT ADE AKINSANYA
SIGN OFF DATE

	BY	CHECKED
DESIGN	Atiqullah	Ahn
DETAILS	van Ryn/Zucchi/Mai	Jain
QUANTITIES	Liao	E. Nichol

PREPARED FOR THE STATE OF CALIFORNIA DEPARTMENT OF TRANSPORTATION

Jal Birdy
PROJECT ENGINEER

BRIDGE NO. 34-0006 L/R
KILOMETER POST 12.8

CU 04
EA 0120F1

DISREGARD PRINTS BEARING EARLIER REVISION DATES

REVISION DATES (PRELIMINARY STAGE ONLY)

SHEET K161A OF 209

Rev. Date: 5-18-98

ORIGINAL SCALE IN MILLIMETERS FOR REDUCED PLANS 0 10 20 30 40 50 60 70 80 90 100

FILE => P:\4141-06\CADD\TS\Checked Plans\YBITS #1-100% No. 2_03-03-08 (Final Renamed)\010612 Hinge K SAS T19 CCO\04-0120f1-34-006r1-u-fblkpdt02.dgn

Jan 6, 2012

USERNAME => fsamson DATE PLOTTED => 1/5/2012 TIME PLOTTED => 5:24:01 PM

DIST.	COUNTY	ROUTE	KILOMETER POST TOTAL PROJECT	SHEET NO.	TOTAL SHEETS
04	SF	80	12.7/13.2	K715A	806

REGISTERED ENGINEER - CIVIL
01/20/2012
PLANS APPROVAL DATE
REGISTERED PROFESSIONAL ENGINEER A.L. ELY No. 18880 Exp. 6-30-13 CIVIL STATE OF CALIFORNIA

The State of California or its officers or agents shall not be responsible for the accuracy or completeness of electronic copies of this plan sheet.

T.Y. LIN / MOFFATT & NICHOL
TWO HARRISON STREET
SAN FRANCISCO, CA 94105

SUPPLEMENTAL SHEET

CONTRACT CHANGE ORDER NO. ___
SHEET ___ OF ___

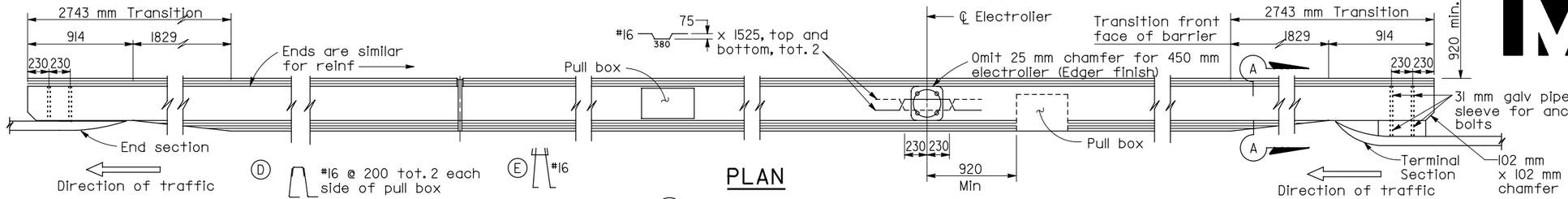

PLAN

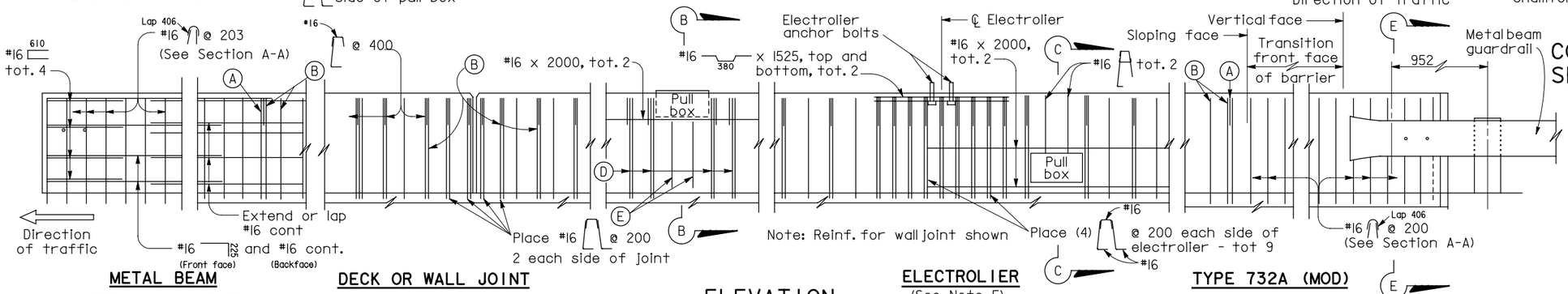

METAL BEAM GUARDRAIL CONNECTION

DECK OR WALL JOINT

ELEVATION

ELECTROLIER (See Note F)

TYPE 732A (MOD)

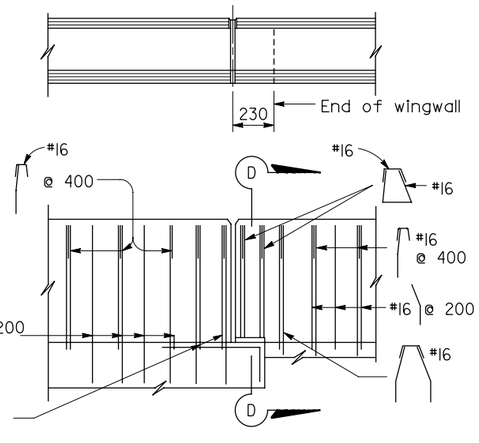

TYPE 732A (MOD) TYPE 732B (MOD)

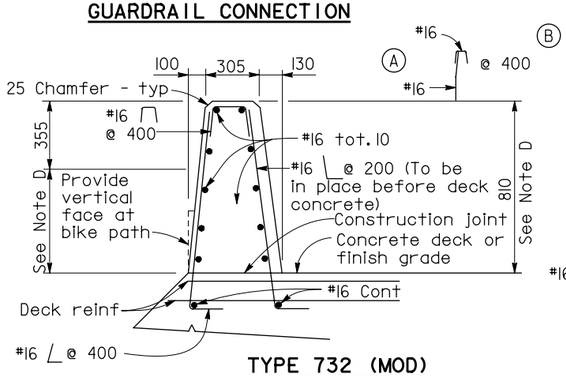

TYPE 732 (MOD)

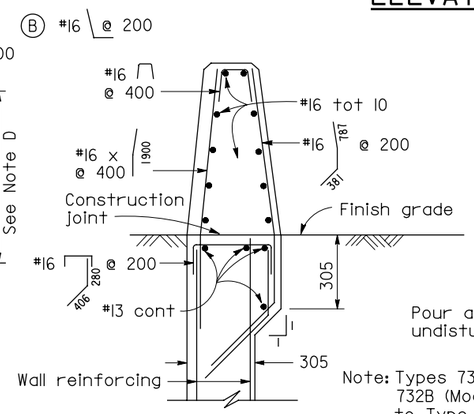

TYPE 732A (MOD)

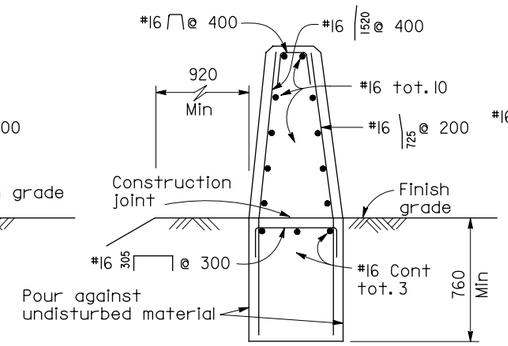

TYPE 732B (MOD)

Note: Types 732A (Mod) & 732B (Mod) are similar to Type 732 (Mod) except as noted

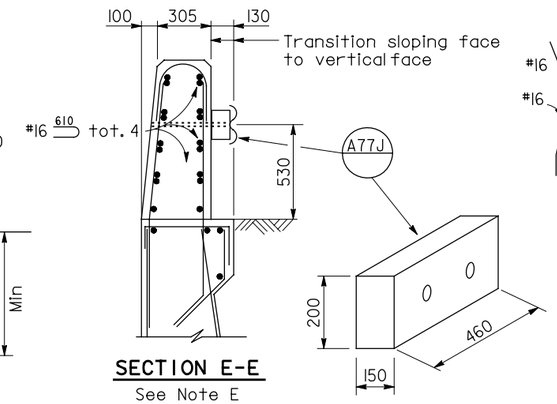

SECTION E-E
See Note E

NOTES

A. Walls are to be backfilled before barrier is placed.

B. Clearance to reinforcing steel in barrier to be 25 mm, except as noted. Longitudinal reinforcement to stop at all expansion joints.

C. See project plans for locations of electroliers and pull boxes.

D. Dimensions may vary with roadway cross slope and with certain thickness of surfacing. See Project Plans.

E. For Metal Beam Guardrail Connection details not shown, see General Plan and Standard Plans.

F. Refer to Project Plans and Standard Plan Sheets ES-9A, ES-9C and ES-9D for electrical details concerning barriers. The maximum number of conduits in a barrier is limited to two (2) 50 mm conduits (max.) along with one (1) 75 mm conduit. When a 75 mm conduit is used, it is restricted to the base of barrier.

G. Minimum concrete edge distance to reinforcing shown, shall be maintained, edge distance may be adjusted to accomodate increase in concrete cover for architectural treatment. See Typical Section.

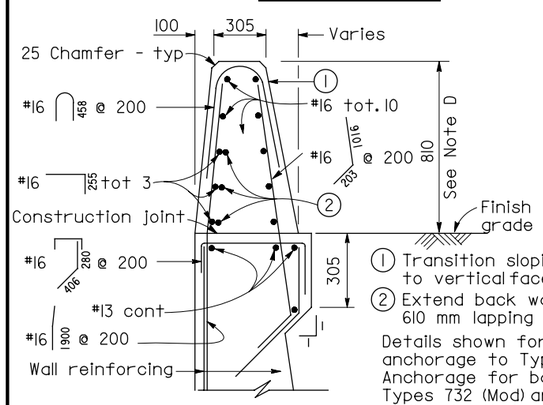

1 Transition sloping face to vertical face
2 Extend back wall reinf. 610 mm lapping with #16

Details shown for barrier anchorage to Type 732A (Mod). Anchorage for barrier Types 732 (Mod) and 732B (Mod) are similar to their respective details.

SECTION A-A

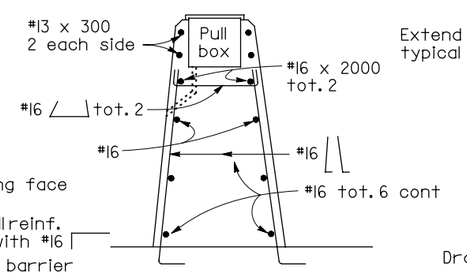

SECTION B-B

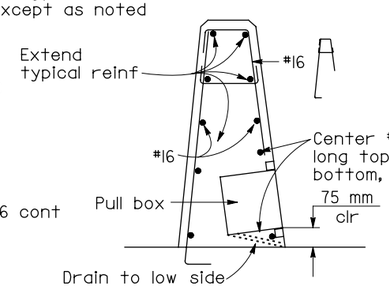

SECTION C-C
See Notes

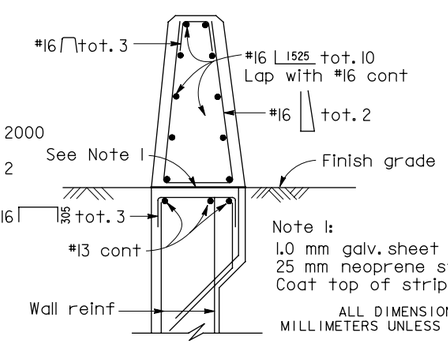

Note 1:
1.0 mm galv. sheet metal over 25 mm neoprene strip.
Coat top of strip with grease.

ALL DIMENSIONS ARE IN MILLIMETERS UNLESS OTHERWISE SHOWN

SECTION D-D

SAN FRANCISCO OAKLAND BAY BRIDGE
EAST SPAN SEISMIC SAFETY PROJECT

YBI TRANSITION STRUCTURES - HINGE K

CONCRETE BARRIER TYPE 732 (MOD)

DESIGN OVERSIGHT ADE AKINSANYA
SIGN OFF DATE
Rev. Date: 5-18-98

	BY	CHECKED
DESIGN	Desai	Jain
DETAILS	van Ryn/Zucchi/Mai	Jain
QUANTITIES	Liao	E. Nichol

PREPARED FOR THE STATE OF CALIFORNIA DEPARTMENT OF TRANSPORTATION

Jal Birdy
PROJECT ENGINEER

BRIDGE NO. 34-0006 L/R
KILOMETER POST 12.8

ORIGINAL SCALE IN MILLIMETERS FOR REDUCED PLANS 0 10 20 30 40 50 60 70 80 90 100

CU 04
EA 0120F1

DISREGARD PRINTS BEARING EARLIER REVISION DATES
REVISION DATES (PRELIMINARY STAGE ONLY)

SHEET K166A OF 209

Jan 6, 2012

USERNAME => fsamson DATE PLOTTED => 1/5/2012 TIME PLOTTED => 5:23:40 PM

FILE => P:\4141-06\CADD\TS\Checked Plans\YBITS #1-100% No. 2_03-03-08 (Final Renamed)\010612 Hinge K SAS T19 CCO\04-0120f1-34-006r1-u-concbar.dgn