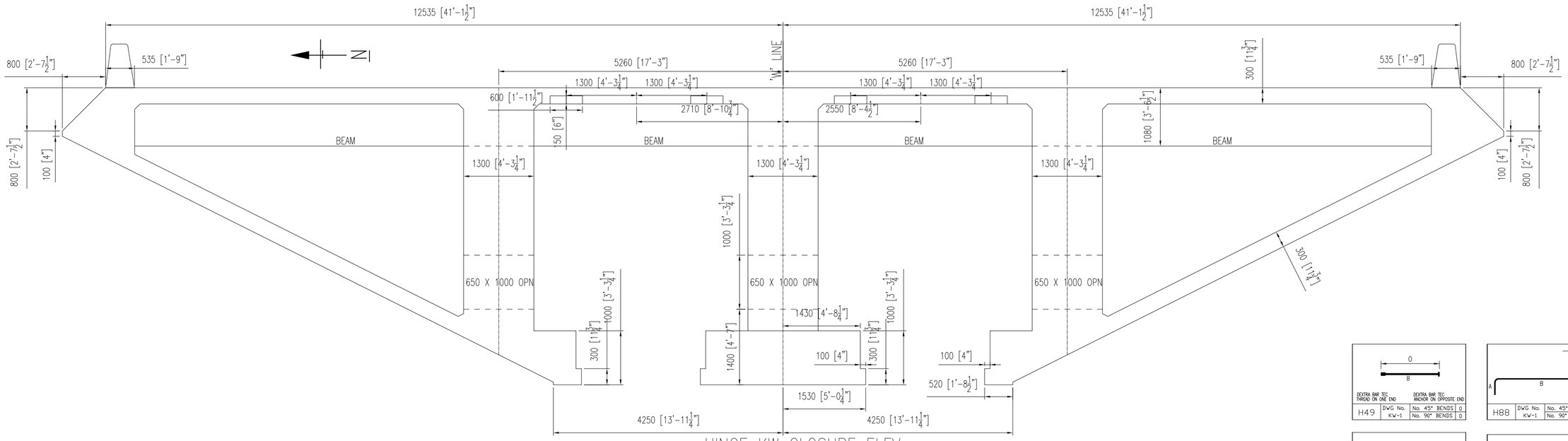

HINGE KW CLOSURE ELEV

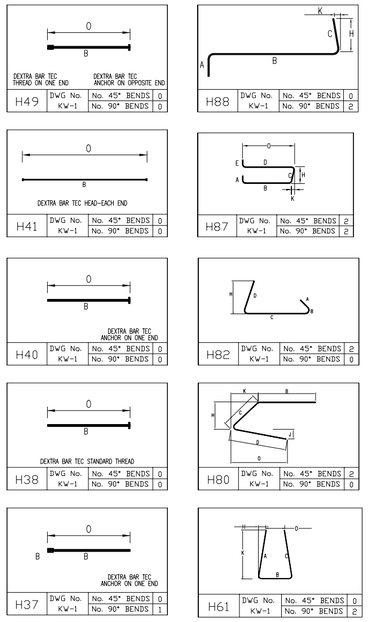

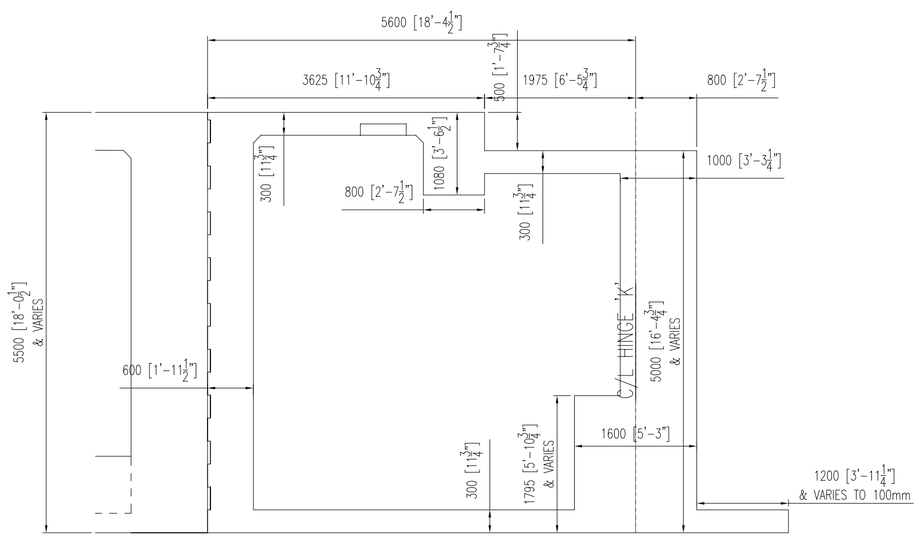

HINGE KW CLOSURE LONG SECTION
(OUTSIDE RIDGE LINES)

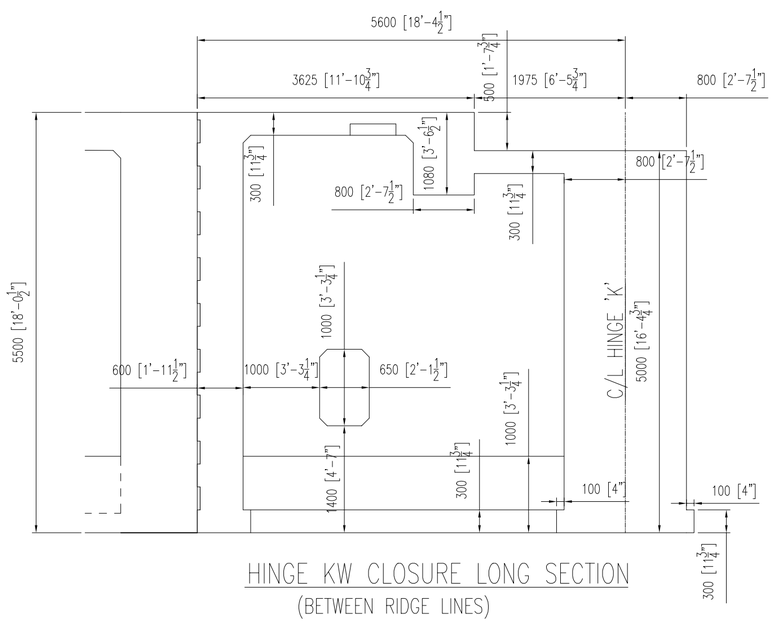

HINGE KW CLOSURE LONG SECTION
(BETWEEN RIDGE LINES)

No.	Description	Date	By
	FOR PLACING	XX/XX/2012	RJC
	FOR REVIEW	01/15/2012	RJC

Revisions and Issue Record

The full intent and purpose of this drawing is the placing of reinforcing steel bars ONLY. It is NOT to be used as a means of communication between the Architect, Engineer, Contractor or any other Sub-trades.

THIS DRAWING IS NOT TO BE SCALED.

Harris Salinas Rebar INC.
355 SOUTH VASCO ROAD, LIVERMORE, CALIFORNIA 94550
TEL. (925) 373-0733 FAX. (925) 373-0136

Project: YBI TRANSITION STRUCTURES WESTBOUND BRIDGE

Drawing: HINGE KW CLOSURE ELEVATION/PLAN

Contractor: MCM CONSTRUCTION, INC

Customer: CAL TRANS

Refer to Run No: KW-BC

Date	Drawn	Chkd.	Contract No.	Dwg. No.
01/07/2012	RJC		13114014	KW-1

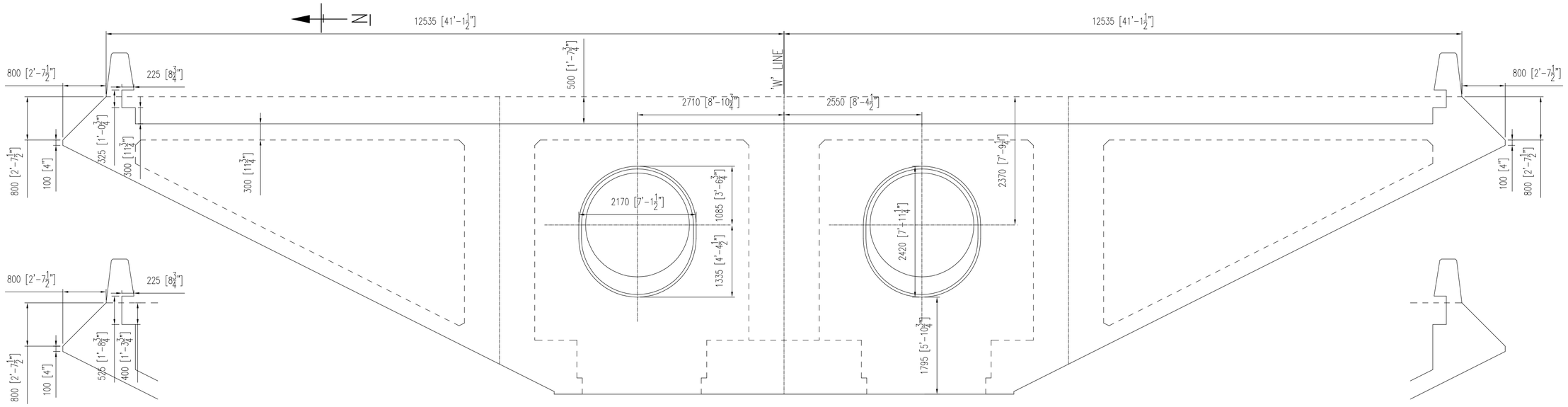

EAST OF HINGE K END DIAPHRAGM

HINGE K END DIAPHRAGM

EAST OF HINGE K END DIAPHRAGM

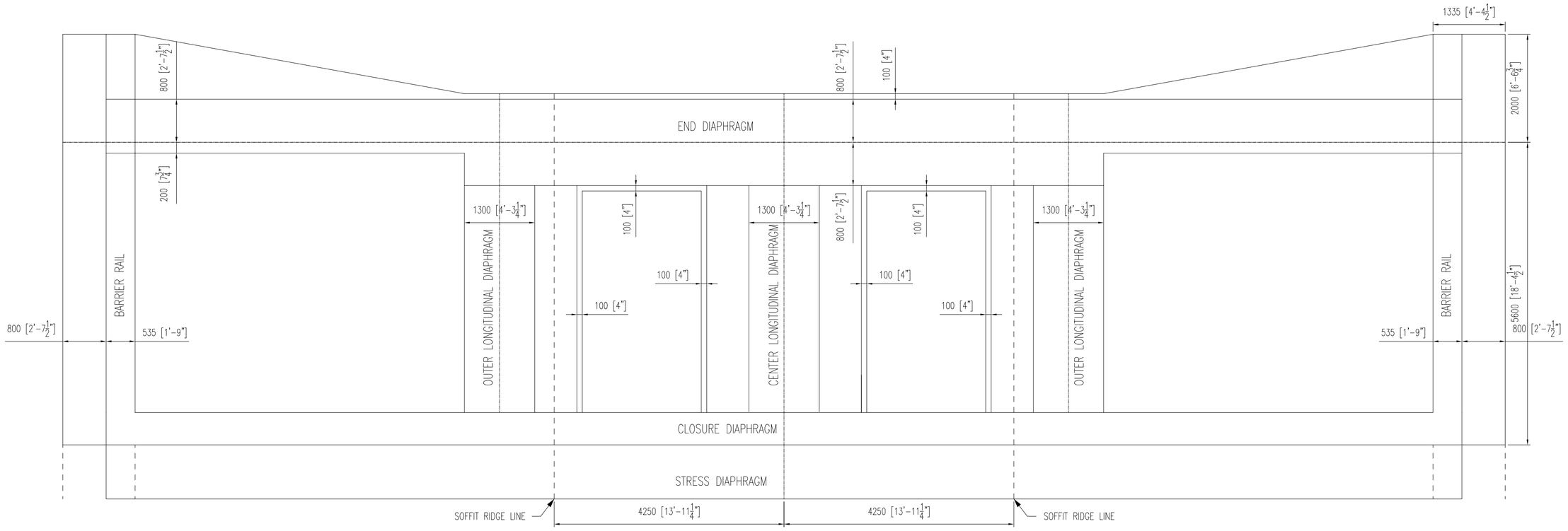

HINGE K CLOSURE/PLAN-BOTTOM

Contractor: MCM CONSTRUCTION, INC

Customer: CAL TRANS

Refer to Run No: KW-BC

Date	Drawn	Chkd.	Contract No.	Dwg. No.
01/07/2012	RJC		13114014	KW-2

Project: YBI TRANSITION STRUCTURES
WESTBOUND BRIDGE

Drawing: HINGE KW CLOSURE
ELEVATION/PLAN

Harris Salinas Rebar INC.
355 SOUTH VASCO ROAD, LIVERMORE, CALIFORNIA 94550
TEL. (925) 373-0733 FAX. (925) 373-0136

No.	Description	Date	By
	FOR REVIEW	01/15/2012	RJC
	FOR PLACING	XX/XX/2012	RJC

The full intent and purpose of this drawing is the placing of reinforcing steel bars ONLY. It is NOT to be used as a means of communication between the Architect, Engineer, Contractor or any other Sub-trades.

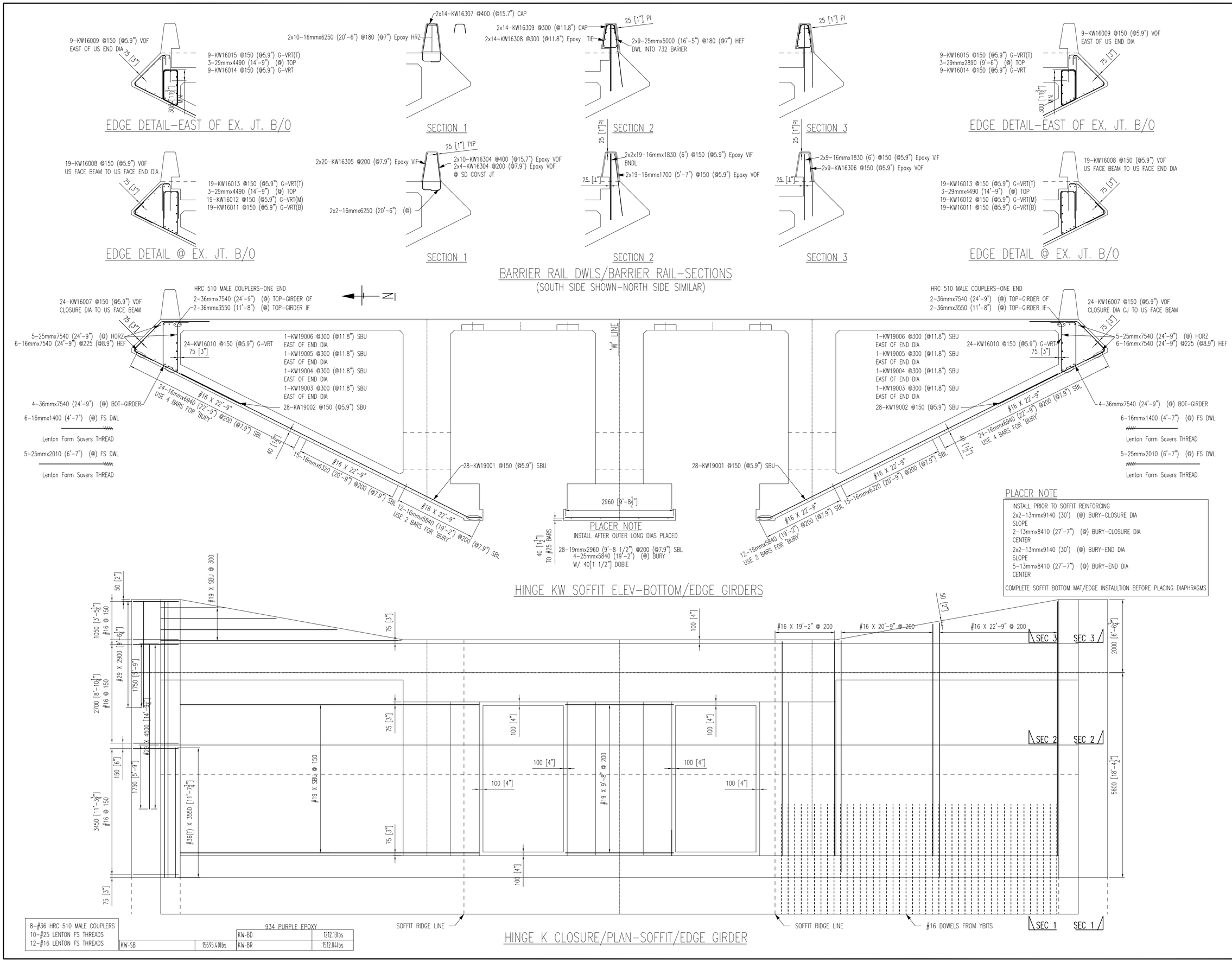

8-#36 HRC 510 MALE COUPLERS		934 PURPLE EPOXY	
10-#25 LENTON FS THREADS		KW-BD	1212.13lbs
12-#16 LENTON FS THREADS		KW-BR	1512.04lbs
KW-SB	15695.40lbs		

Contractor: MCM CONSTRUCTION, INC
Customer: CAL TRANS
Refer to Run No: KW-SB

Date	Drawn	Chkd.	Contract No.	Dwg. No.
01/07/2012	RJC		13114014	KW-3

Project: YBI TRANSITION STRUCTURES
WESTBOUND BRIDGE

Drawing: HINGE KW CLOSURE
SOFFIT BOT/EDGE GIRDER-ELE/PLAN

Harris Salinas Rebar INC.
355 SOUTH VASCO ROAD, LIVERMORE, CALIFORNIA 94550
TEL. (925) 373-0733 FAX. (925) 373-0136

No.	Description	Date	By
	FOR REVIEW	01/15/2012	RJC
	FOR PLACING	XX/XX/2012	RJC

The full intent and purpose of this drawing is the placing of reinforcing steel. It is not to be used as a means of communication between the Architect, Engineer, Contractor or any other Sub-Trades.

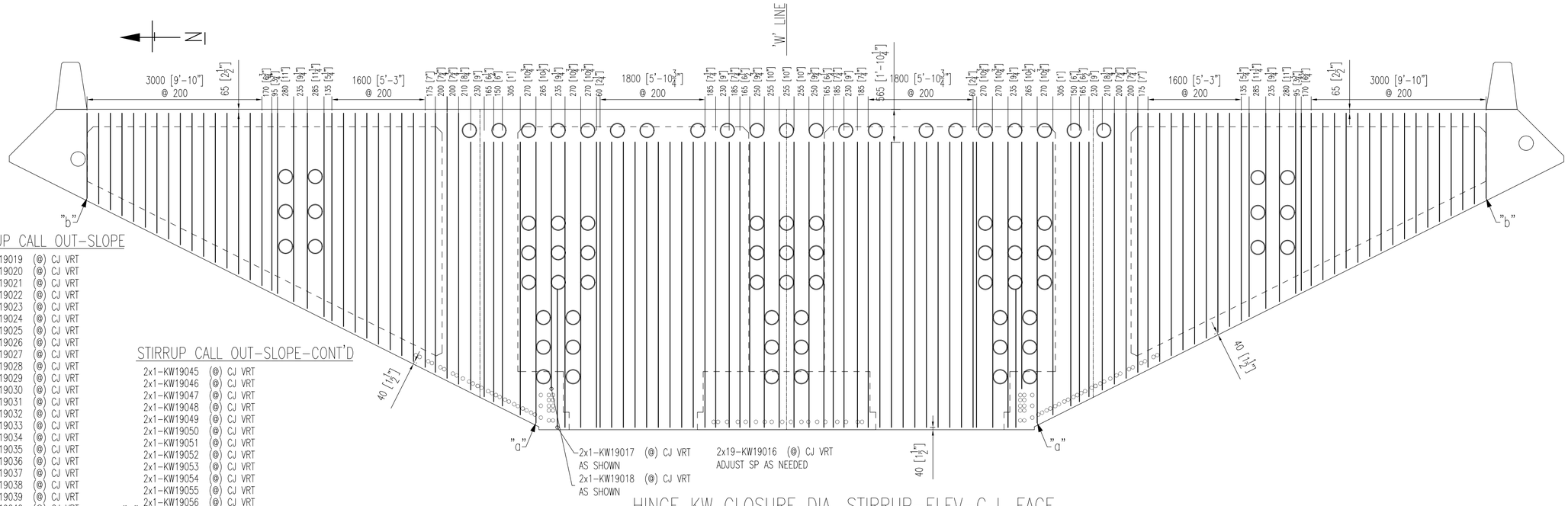

STIRRUP CALL OUT-SLOPE

"a" 2x1-KW19019 (@) CJ VRT
2x1-KW19020 (@) CJ VRT
2x1-KW19021 (@) CJ VRT
2x1-KW19022 (@) CJ VRT
2x1-KW19023 (@) CJ VRT
2x1-KW19024 (@) CJ VRT
2x1-KW19025 (@) CJ VRT
2x1-KW19026 (@) CJ VRT
2x1-KW19027 (@) CJ VRT
2x1-KW19028 (@) CJ VRT
2x1-KW19029 (@) CJ VRT
2x1-KW19030 (@) CJ VRT
2x1-KW19031 (@) CJ VRT
2x1-KW19032 (@) CJ VRT
2x1-KW19033 (@) CJ VRT
2x1-KW19034 (@) CJ VRT
2x1-KW19035 (@) CJ VRT
2x1-KW19036 (@) CJ VRT
2x1-KW19037 (@) CJ VRT
2x1-KW19038 (@) CJ VRT
2x1-KW19039 (@) CJ VRT
2x1-KW19040 (@) CJ VRT
2x1-KW19041 (@) CJ VRT
2x1-KW19042 (@) CJ VRT
2x1-KW19043 (@) CJ VRT
2x1-KW19044 (@) CJ VRT

STIRRUP CALL OUT-SLOPE-CONT'D

2x1-KW19045 (@) CJ VRT
2x1-KW19046 (@) CJ VRT
2x1-KW19047 (@) CJ VRT
2x1-KW19048 (@) CJ VRT
2x1-KW19049 (@) CJ VRT
2x1-KW19050 (@) CJ VRT
2x1-KW19051 (@) CJ VRT
2x1-KW19052 (@) CJ VRT
2x1-KW19053 (@) CJ VRT
2x1-KW19054 (@) CJ VRT
2x1-KW19055 (@) CJ VRT
2x1-KW19056 (@) CJ VRT
"b" 2x1-KW19057 (@) CJ VRT

HINGE KW CLOSURE DIA. STIRRUP-ELEV-C.J. FACE

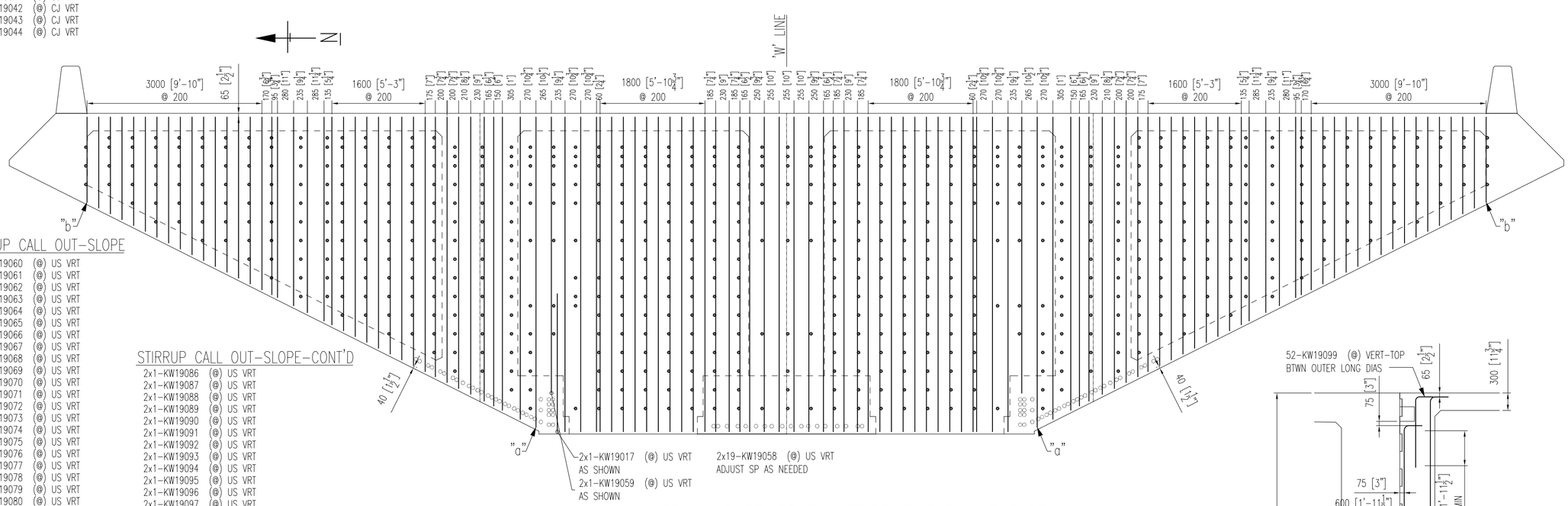

STIRRUP CALL OUT-SLOPE

"a" 2x1-KW19060 (@) US VRT
2x1-KW19061 (@) US VRT
2x1-KW19062 (@) US VRT
2x1-KW19063 (@) US VRT
2x1-KW19064 (@) US VRT
2x1-KW19065 (@) US VRT
2x1-KW19066 (@) US VRT
2x1-KW19067 (@) US VRT
2x1-KW19068 (@) US VRT
2x1-KW19069 (@) US VRT
2x1-KW19070 (@) US VRT
2x1-KW19071 (@) US VRT
2x1-KW19072 (@) US VRT
2x1-KW19073 (@) US VRT
2x1-KW19074 (@) US VRT
2x1-KW19075 (@) US VRT
2x1-KW19076 (@) US VRT
2x1-KW19077 (@) US VRT
2x1-KW19078 (@) US VRT
2x1-KW19079 (@) US VRT
2x1-KW19080 (@) US VRT
2x1-KW19081 (@) US VRT
2x1-KW19082 (@) US VRT
2x1-KW19083 (@) US VRT
2x1-KW19084 (@) US VRT
2x1-KW19085 (@) US VRT

STIRRUP CALL OUT-SLOPE-CONT'D

2x1-KW19086 (@) US VRT
2x1-KW19087 (@) US VRT
2x1-KW19088 (@) US VRT
2x1-KW19089 (@) US VRT
2x1-KW19090 (@) US VRT
2x1-KW19091 (@) US VRT
2x1-KW19092 (@) US VRT
2x1-KW19093 (@) US VRT
2x1-KW19094 (@) US VRT
2x1-KW19095 (@) US VRT
2x1-KW19096 (@) US VRT
2x1-KW19097 (@) US VRT
"b" 2x1-KW19098 (@) US VRT

HINGE KW CLOSURE DIA. STIRRUP-ELEV-US FACE

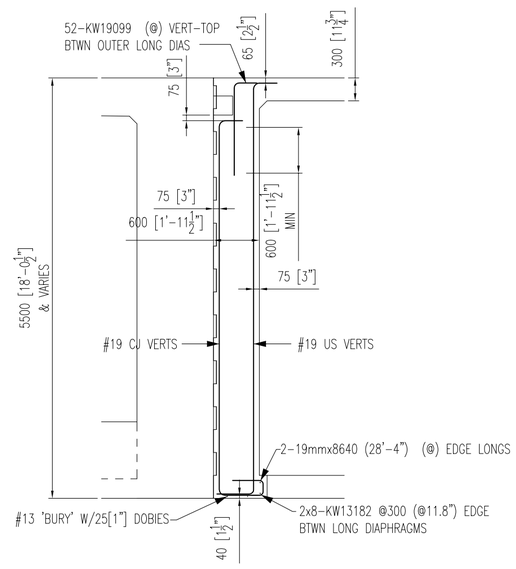

CLOSURE DIAPHRAGM-SECTION

PLACER NOTE:

INSTALL SD CONSTRUCTION JOINT FACE - COMPLETE
FIELD OPTION TO COMPLETE US FACE - SLOPES ONLY
INSTALL US FACE BETWEEN OUTER LONGITUDINAL DIAPHRAGMS AFTER OUTER LONGITUDINAL DIAPHRAGMS ARE COMPLETE

KW-CDS	5933.30lbs

Contractor: MCM CONSTRUCTION, INC
Customer: CAL TRANS
Refer to Run No: KW-CD

Date	Drawn	Chkd.	Contract No.	Dwg. No.
01/07/2012	RJC		13114014	KW-4

Project: YBI TRANSITION STRUCTURES
WESTBOUND BRIDGE

Drawing: HINGE KW CLOSURE
CLOSURE DIA STIRRUP-ELEV/SECT.

Harris Salinas Rebar INC.
355 SOUTH VASCO ROAD, LIVERMORE, CALIFORNIA 94550
TEL. (925) 373-0733 FAX. (925) 373-0136

No.	Description	Date	By
	FOR REVIEW	01/15/2012	RJC
	FOR PLACING	XX/XX/2012	RJC

The full intent and purpose of this drawing is the placing of reinforcing steel. It is not to be used as a means of communication between the Architect, Engineer, Contractor or any other Sub-Trades.

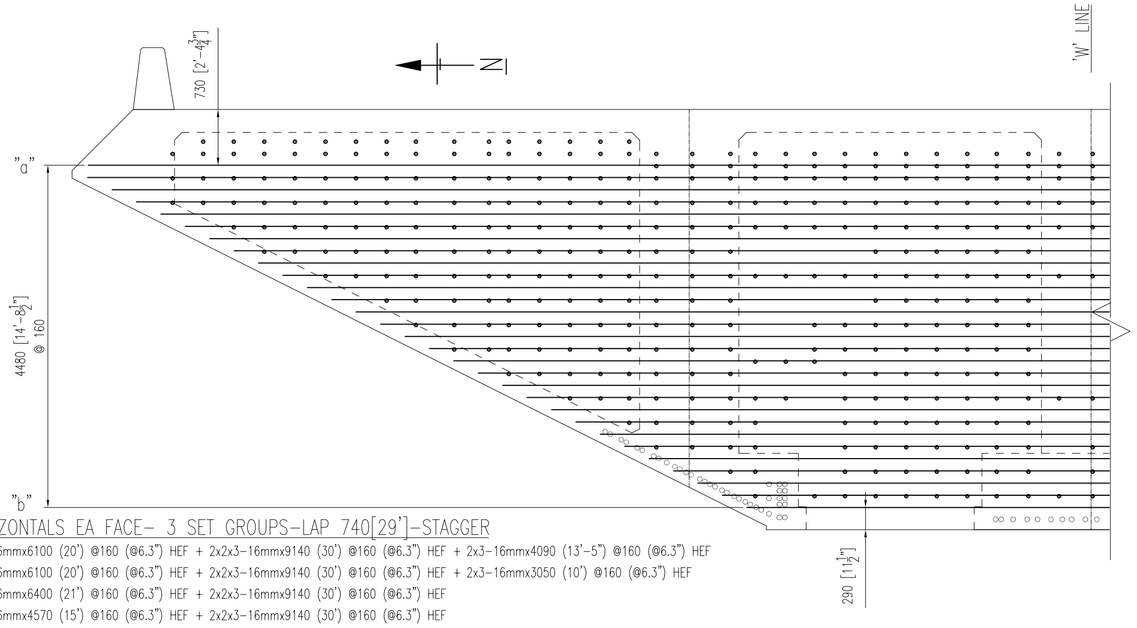

HORIZONTALS EA FACE- 3 SET GROUPS-LAP 740[29']-STAGGER

"a" 2x3-16mmx6100 (20') @160 (@6.3") HEF + 2x2x3-16mmx9140 (30') @160 (@6.3") HEF + 2x3-16mmx4090 (13'-5") @160 (@6.3") HEF
2x3-16mmx6100 (20') @160 (@6.3") HEF + 2x2x3-16mmx9140 (30') @160 (@6.3") HEF + 2x3-16mmx3050 (10') @160 (@6.3") HEF
2x3-16mmx6400 (21') @160 (@6.3") HEF + 2x2x3-16mmx9140 (30') @160 (@6.3") HEF
2x3-16mmx4570 (15') @160 (@6.3") HEF + 2x2x3-16mmx9140 (30') @160 (@6.3") HEF
2x3-16mmx3050 (10') @160 (@6.3") HEF + 2x2x3-16mmx9140 (30') @160 (@6.3") HEF
2x3-16mmx6100 (20') @160 (@6.3") HEF + 2x3-16mmx9140 (30') @160 (@6.3") HEF + 2x3-16mmx3660 (12') @160 (@6.3") HEF
2x3-16mmx6100 (20') @160 (@6.3") HEF + 2x3-16mmx9140 (30') @160 (@6.3") HEF + 2x3-16mmx1830 (6') @160 (@6.3") HEF
2x3-16mmx4570 (15') @160 (@6.3") HEF + 2x3-16mmx9140 (30') @160 (@6.3") HEF
2x3-16mmx3050 (10') @160 (@6.3") HEF + 2x3-16mmx9140 (30') @160 (@6.3") HEF
2x1-16mmx9140 (30') @160 (@6.3") HEF
"b" 2x1-16mmx8840 (29') @160 (@6.3") HEF

HINGE KW CLOSURE DIA. HORIZONTALS-ELEVATION

(SIMILAR ABOUT C/L)

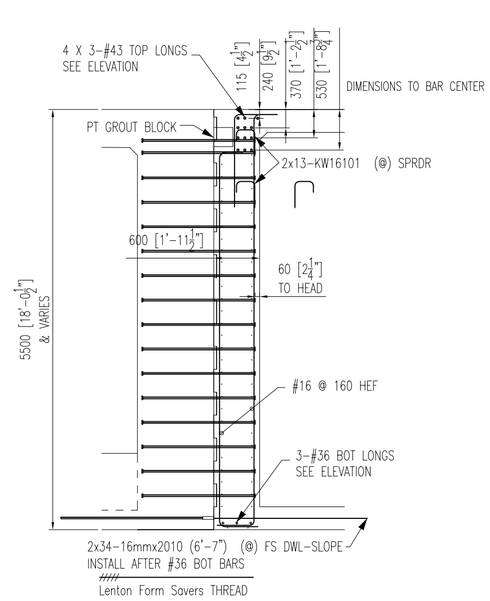

CLOSURE DIAPHRAGM-SECTION

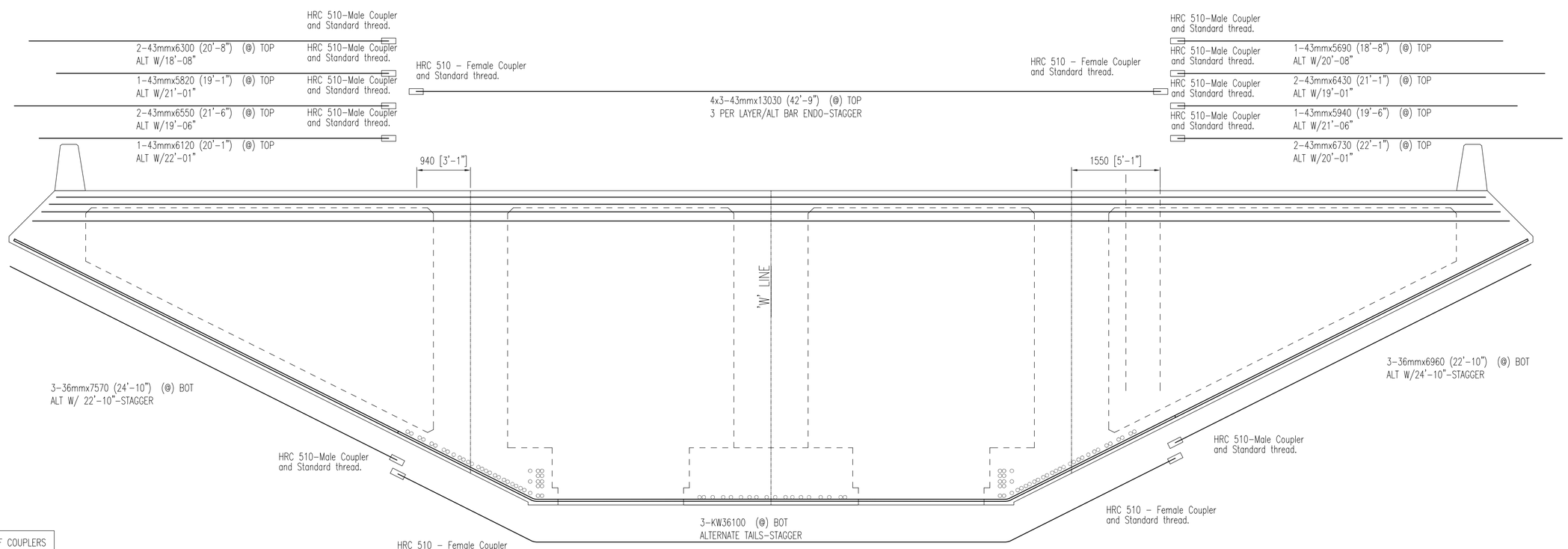

6-#36 HRC 510 M&F COUPLERS
12-#43 HRC 510 M&F COUPLERS
68-#16 LENTON FS THREADS

KW-CDH	12154.97lbs

HINGE KW CLOSURE DIA. TOP & BOTTOM-ELEVATION

Contractor: MCM CONSTRUCTION, INC
Customer: CAL TRANS
Refer to Run No: KW-CDH

Date	Drawn	Chkd.	Contract No.	Dwg. No.
01/07/2012	RJC		13114014	KW-5

Project: YBI TRANSITION STRUCTURES
WESTBOUND BRIDGE

Drawing: HINGE KW CLOSURE
CLOSURE DIA HORZ-ELEV/SECT.

Harris Salinas Rohar INC.
355 SOUTH VASCO ROAD, LIVERMORE, CALIFORNIA 94550
TEL. (925) 373-0733 FAX. (925) 373-0136

No.	Description	Date	By
	FOR REVIEW	01/15/2012	RJC
	FOR PLACING	XX/XX/2012	RJC

The full intent and purpose of this drawing is the placing of reinforcing steel. It is not to be used as a means of communication between the Architect, Engineer, Contractor or any other Sub-trades.

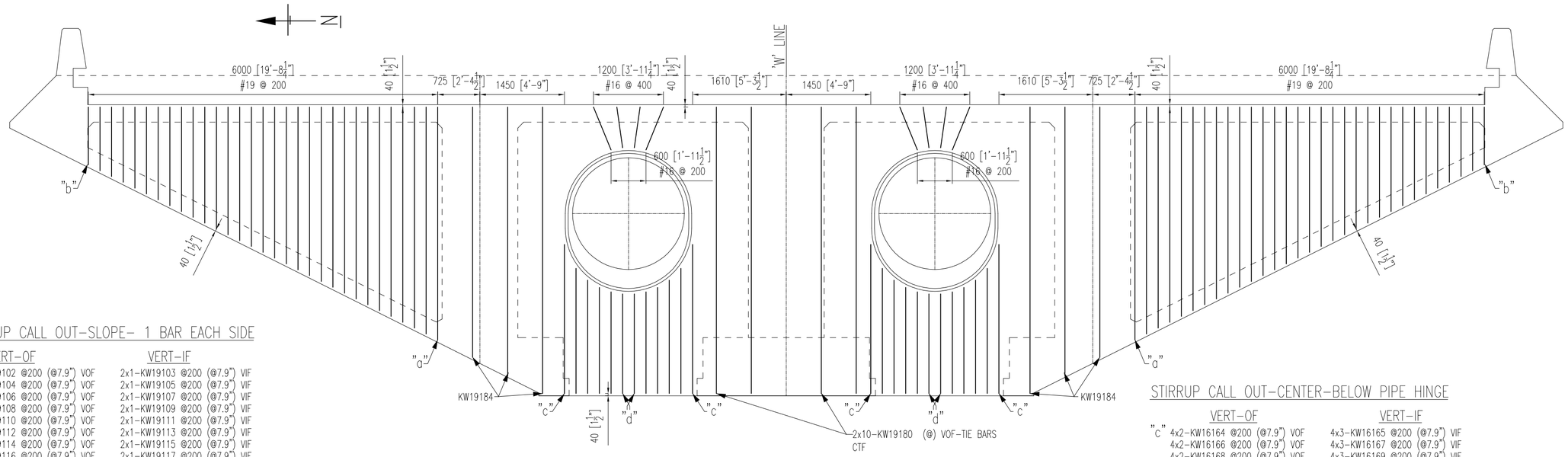

HINGE KW END DIA. STIRRUP-ELEVATION

STIRRUP CALL OUT-SLOPE- 1 BAR EACH SIDE

	VERT-OF	VERT-IF
"a"	2x1-KW19102 @200 (@7.9") VOF	2x1-KW19103 @200 (@7.9") VIF
	2x1-KW19104 @200 (@7.9") VOF	2x1-KW19105 @200 (@7.9") VIF
	2x1-KW19106 @200 (@7.9") VOF	2x1-KW19107 @200 (@7.9") VIF
	2x1-KW19108 @200 (@7.9") VOF	2x1-KW19109 @200 (@7.9") VIF
	2x1-KW19110 @200 (@7.9") VOF	2x1-KW19111 @200 (@7.9") VIF
	2x1-KW19112 @200 (@7.9") VOF	2x1-KW19113 @200 (@7.9") VIF
	2x1-KW19114 @200 (@7.9") VOF	2x1-KW19115 @200 (@7.9") VIF
	2x1-KW19116 @200 (@7.9") VOF	2x1-KW19117 @200 (@7.9") VIF
	2x1-KW19118 @200 (@7.9") VOF	2x1-KW19119 @200 (@7.9") VIF
	2x1-KW19120 @200 (@7.9") VOF	2x1-KW19121 @200 (@7.9") VIF
	2x1-KW19122 @200 (@7.9") VOF	2x1-KW19123 @200 (@7.9") VIF
	2x1-KW19124 @200 (@7.9") VOF	2x1-KW19125 @200 (@7.9") VIF
	2x1-KW19126 @200 (@7.9") VOF	2x1-KW19127 @200 (@7.9") VIF
	2x1-KW19128 @200 (@7.9") VOF	2x1-KW19129 @200 (@7.9") VIF
	2x1-KW19130 @200 (@7.9") VOF	2x1-KW19131 @200 (@7.9") VIF
	2x1-KW19132 @200 (@7.9") VOF	2x1-KW19133 @200 (@7.9") VIF
	2x1-KW19134 @200 (@7.9") VOF	2x1-KW19135 @200 (@7.9") VIF
	2x1-KW19136 @200 (@7.9") VOF	2x1-KW19137 @200 (@7.9") VIF
	2x1-KW19138 @200 (@7.9") VOF	2x1-KW19139 @200 (@7.9") VIF
	2x1-KW19140 @200 (@7.9") VOF	2x1-KW19141 @200 (@7.9") VIF
	2x1-KW19142 @200 (@7.9") VOF	2x1-KW19143 @200 (@7.9") VIF
	2x1-KW19144 @200 (@7.9") VOF	2x1-KW19145 @200 (@7.9") VIF
	2x1-KW19146 @200 (@7.9") VOF	2x1-KW19147 @200 (@7.9") VIF
	2x1-KW19148 @200 (@7.9") VOF	2x1-KW19149 @200 (@7.9") VIF
	2x1-KW19150 @200 (@7.9") VOF	2x1-KW19151 @200 (@7.9") VIF
	2x1-KW19152 @200 (@7.9") VOF	2x1-KW19153 @200 (@7.9") VIF
	2x1-KW19154 @200 (@7.9") VOF	2x1-KW19155 @200 (@7.9") VIF
	2x1-KW19156 @200 (@7.9") VOF	2x1-KW19157 @200 (@7.9") VIF
	2x1-KW19158 @200 (@7.9") VOF	2x1-KW19159 @200 (@7.9") VIF
	2x1-KW19160 @200 (@7.9") VOF	2x1-KW19161 @200 (@7.9") VIF
"b"	2x1-KW19162 @200 (@7.9") VOF	2x1-KW19163 @200 (@7.9") VIF

STIRRUP CALL OUT-CENTER-BELOW PIPE HINGE

	VERT-OF	VERT-IF
"c"	4x2-KW16164 @200 (@7.9") VOF	4x3-KW16165 @200 (@7.9") VIF
	4x2-KW16166 @200 (@7.9") VOF	4x3-KW16167 @200 (@7.9") VIF
	4x2-KW16168 @200 (@7.9") VOF	4x3-KW16169 @200 (@7.9") VIF
	4x2-KW16170 @200 (@7.9") VOF	4x3-KW16171 @200 (@7.9") VIF
	4x2-KW16172 @200 (@7.9") VOF	4x3-KW16173 @200 (@7.9") VIF
"d"	4x2-KW16174 @200 (@7.9") VOF	4x3-KW16175 @200 (@7.9") VIF

STIRRUP CALL OUT-CENTER-ABOVE PIPE HINGE

VERT-EF

4x5-KW16177 @200 (@7.9") VRT
4x5-KW16178 @200 (@7.9") VRT

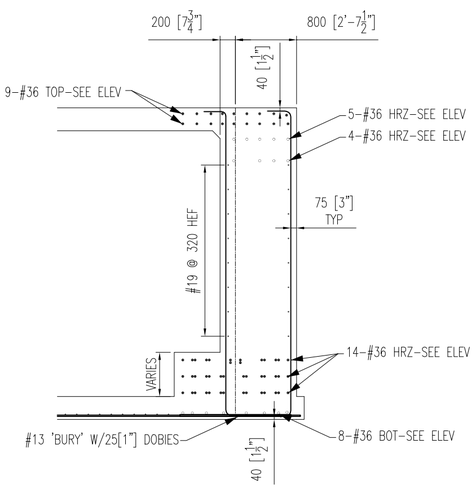

END DIAPHRAGM-SECTION @ SLOPE

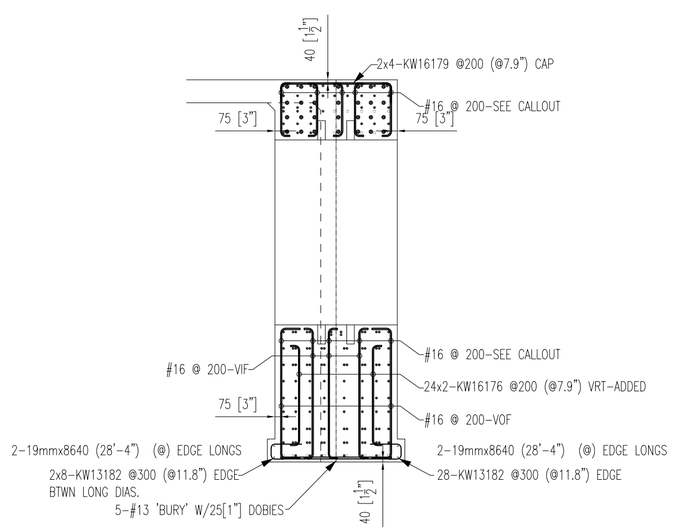

END DIAPHRAGM-SECTION BTWN RIDGE LINES

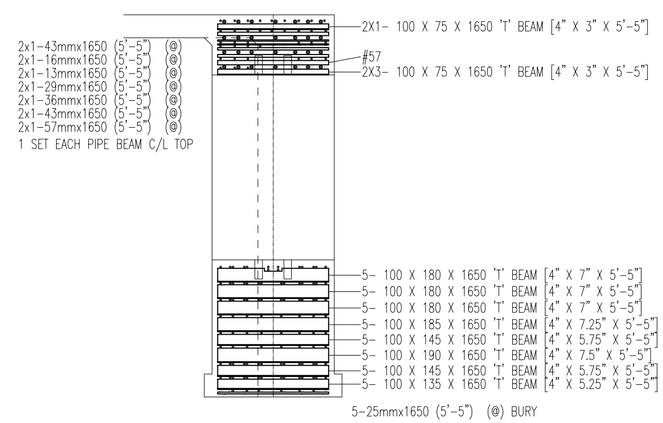

END DIAPHRAGM-SECTION #36 BAR SUPPORT

PLACER NOTE:

INSTALL US END DIAPHRAGM FACE - COMPLETE

SEE SECTION-
#36 SUPPORT DETAIL

KW-EDS	4930.86lbs

Contractor: MCM CONSTRUCTION, INC
Customer: CAL TRANS
Refer to Run No: KW-ED

Date	Drawn	Chkd.	Contract No.	Dwg. No.
01/07/2012	RJC		13114014	KW-6

Project: YBI TRANSITION STRUCTURES
WESTBOUND BRIDGE

Drawing: HINGE KW CLOSURE
END DIA STIRRUP-ELEV/SECT.

Harris Salinas Rebar INC.
355 SOUTH VASCO ROAD, LIVERMORE, CALIFORNIA 94550
TEL. (925) 373-0733 FAX. (925) 373-0136

No.	Description	Date	By
	FOR REVIEW	01/15/2012	RJC
	FOR PLACING	XX/XX/2012	RJC

The full intent and purpose of this drawing is the placing of reinforcing steel only. It is not to be used for any other communication between the Architect, Engineer, Contractor or any other Sub-trades.

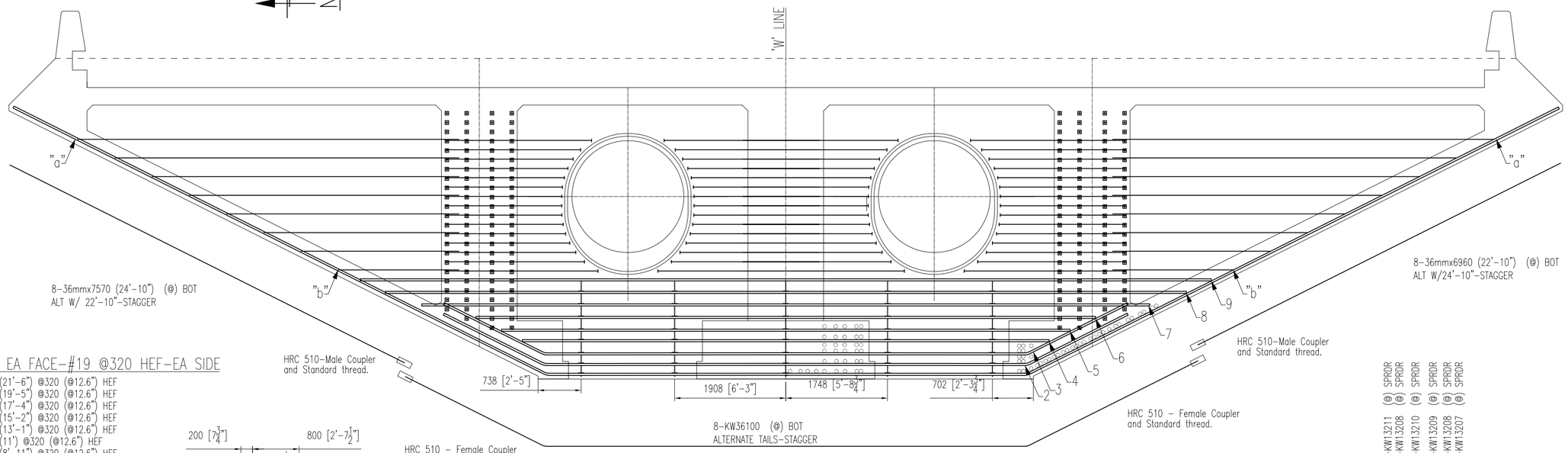

HINGE KW END DIA. HORZ/BOT/TOP-ELEVATION

HORIZONTALS EA FACE-#19 @320 HEF-EA SIDE

"a" 2x2-19mmx6550 (21'-6") @320 (@12.6") HEF
2x2-19mmx5920 (19'-5") @320 (@12.6") HEF
2x2-19mmx5280 (17'-4") @320 (@12.6") HEF
2x2-19mmx4620 (15'-2") @320 (@12.6") HEF
2x2-19mmx3990 (13'-1") @320 (@12.6") HEF
2x2-19mmx3350 (11') @320 (@12.6") HEF
2x2-19mmx2720 (8'-11") @320 (@12.6") HEF
"b" 2x2-19mmx2080 (6'-10") @320 (@12.6") HEF

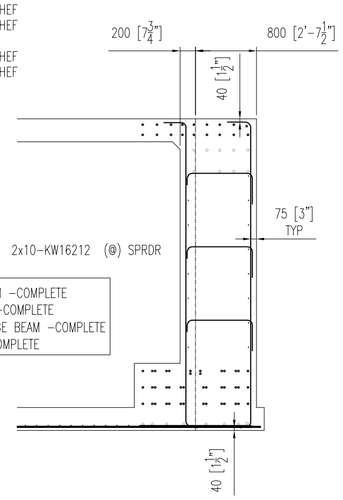

END DIAPHRAGM-SECTION @ SLOPE

PLACER NOTE:

INSTALL #36 HORZONTALS BELOW PIPE HINGE BEAM -COMPLETE
INSTALL #16 VERTICALS BELOW PIPE HINGE BEAM -COMPLETE
INSTALL #16 HEADED HORZONTALS BTWN PIPE HINGE BEAM -COMPLETE
INSTALL DS END DIAPHRAGM FACE @ SLOPES - COMPLETE

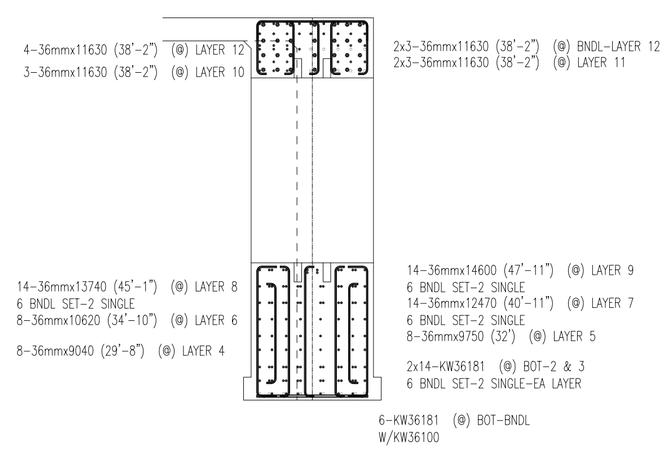

END DIAPHRAGM-SECTION #36 BAR CALL OUT

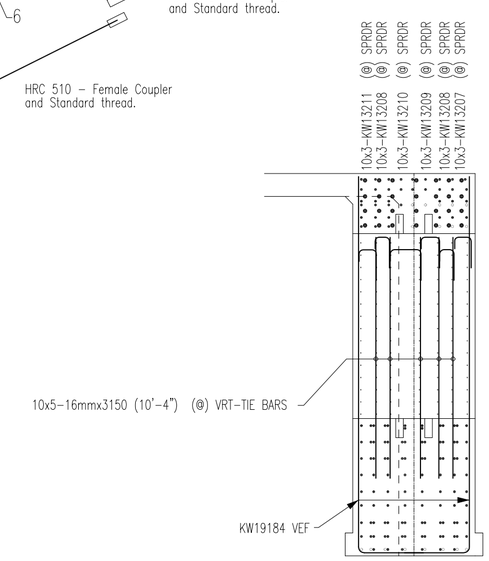

END DIAPHRAGM-SECTION BTWN RIDGE LINES

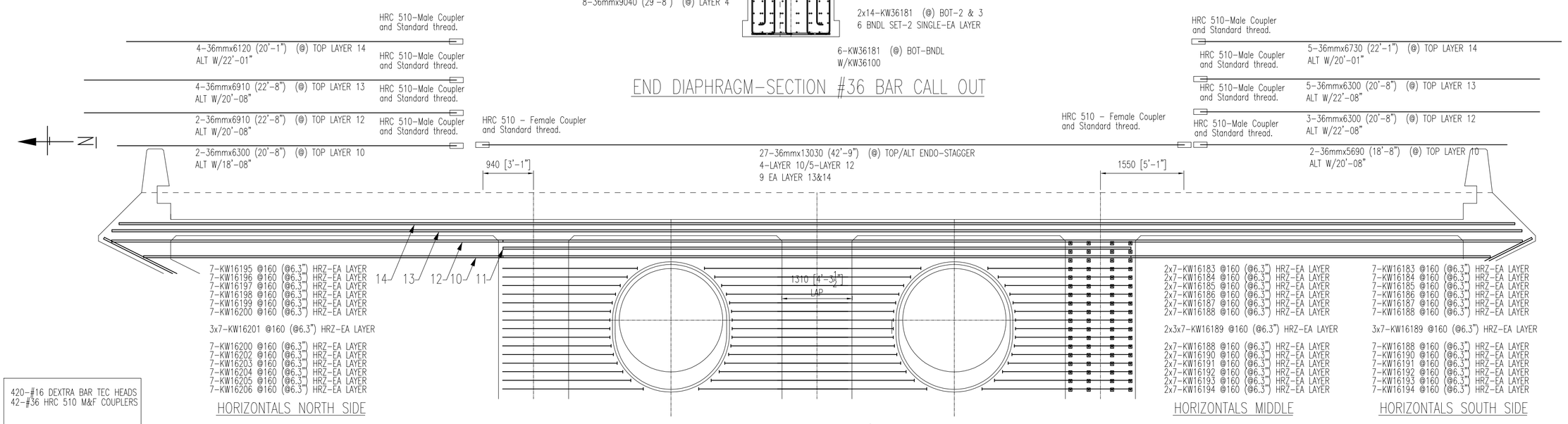

HORIZONTALS NORTH SIDE

HORIZONTALS MIDDLE

HORIZONTALS SOUTH SIDE

HINGE KW END DIA. HORZ/TOP-PART ELEVATION

420-#16 DEXTRA BAR TEC HEADS
42-#36 HRC 510 M&F COUPLERS

KW-EDH	44019.23lbs

Contractor: MCM CONSTRUCTION, INC
Customer: CAL TRANS
Refer to Run No: KW-EDH

Date	Drawn	Chkd.	Contract No.	Dwg. No.
01/07/2012	RJC		13114014	KW-7

Project: YBI TRANSITION STRUCTURES
WESTBOUND BRIDGE

Drawing: HINGE KW CLOSURE
END DIA HORZ-ELEV/SECT.

Harris Salinas Rebar INC.
355 SOUTH VASCO ROAD, LIVERMORE, CALIFORNIA 94550
TEL. (925) 373-0733 FAX. (925) 373-0136

No.	Description	Date	By
	FOR REVIEW	01/15/2012	RJC
	FOR PLACING	XX/XX/2012	RJC

The full intent and purpose of this drawing is the placing of reinforcing steel. Any deviations, modifications or omissions of communication between the Architect, Engineer, Contractor or any other Sub-trades.

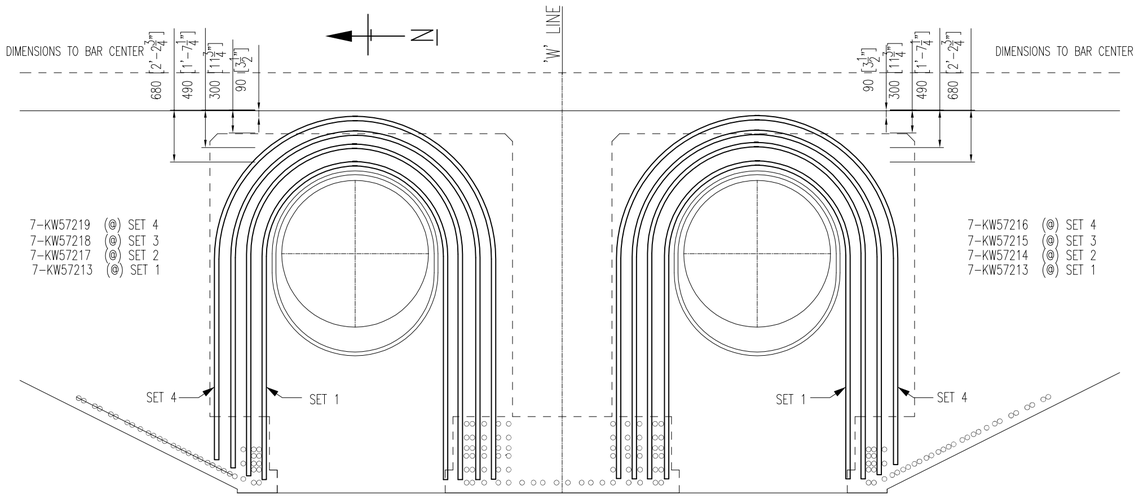

HINGE KW END DIA. #57 CALLOUT-PART ELEVATION

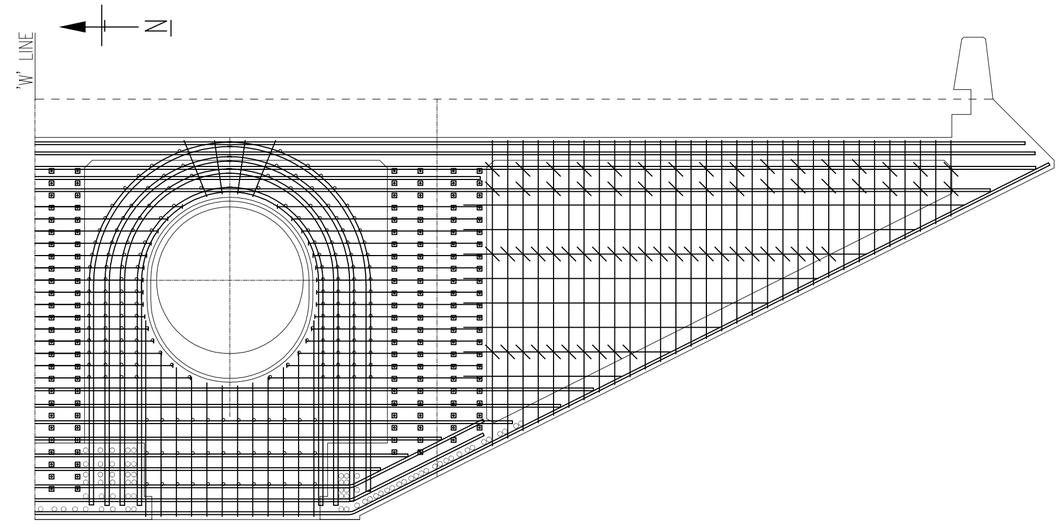

HINGE KW END DIA. CROSS TIES-PART ELEVATION

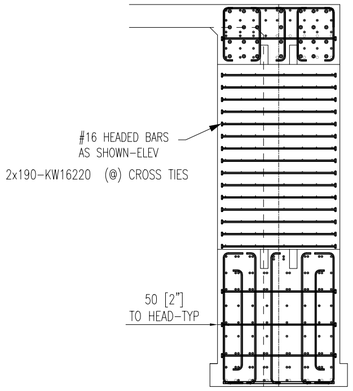

SECTION-CROSS TIES BTWN RIDGE LINES

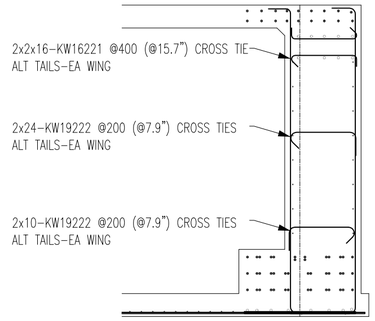

SECTION-CROSS TIES @ SLOPES

#57 BARS-ADDED 25% FOR RE-FABRICATION DUE TO TOLERANCES

760-#16 DEXTRA BAR TEC HEADS	KW-HH	26321.81lbs

PLACER NOTE:

SEQUENCE #36/#57 HORZONTALS ABOVE PIPE HINGE BEAM -COMPLETE
INSTALL #16 VERTICALS ABOVE PIPE HINGE BEAM -COMPLETE
INSTALL #16 HEADED CROSS TIES AROUND PIPE HINGE BEAM -COMPLETE

Contractor: MCM CONSTRUCTION, INC
Customer: CAL TRANS
Refer to Run No: KW-EHH

Date	Drawn	Chkd.	Contract No.	Dwg. No.
01/07/2012	RJC		13114014	KW-8

Project: YBI TRANSITION STRUCTURES
WESTBOUND BRIDGE

Drawing: HINGE KW CLOSURE
END DIA CROSS TIES/#57 ADDED

Harris Salinas Rebar INC.
355 SOUTH VASCO ROAD, LIVERMORE, CALIFORNIA 94550
TEL. (925) 373-0733 FAX. (925) 373-0136

No.	Description	Date	By
	FOR REVIEW	01/15/2012	RJC
	FOR PLACING	XX/XX/2012	RJC

The full intent and purpose of this drawing is the placing of reinforcing steel. It is NOT to be used as a means of communication between the Architect, Engineer, Contractor or any other Sub-trades.

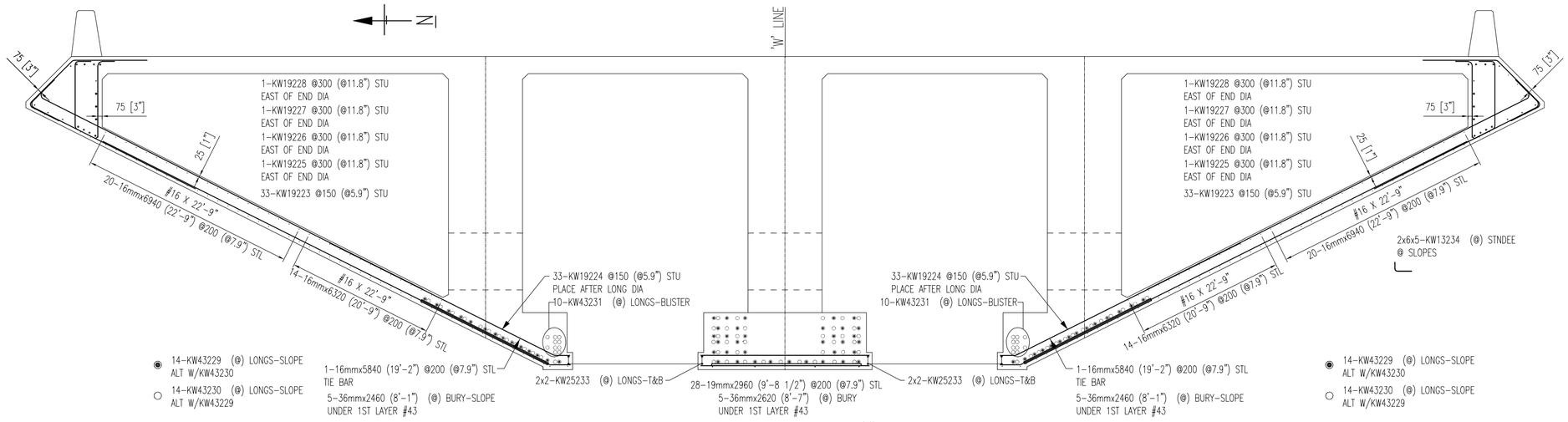

HINGE KW SOFFIT ELEV-TOP/#43 LONGS

PLACER NOTE:

INSTALL #36 'BURY' BARS AT OUTER LONG. DIA.-SLOPES
INSTALL #43 LONGITUDINAL BARS AT SLOPES
INSTALL SOFFIT TOP MAT-EDGE BEAM TO OUTER LONG.DIA.
INSTALL OUTER LONG. DIA. WALLS COMPLETE

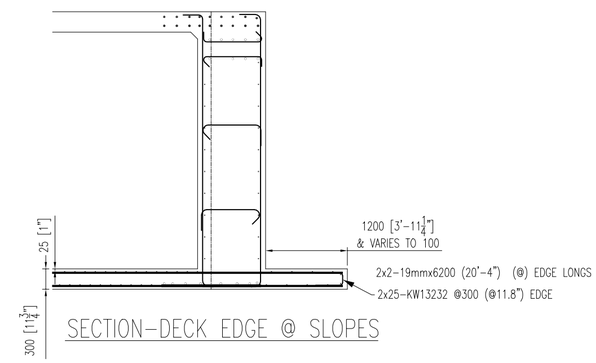

SECTION-DECK EDGE @ SLOPES

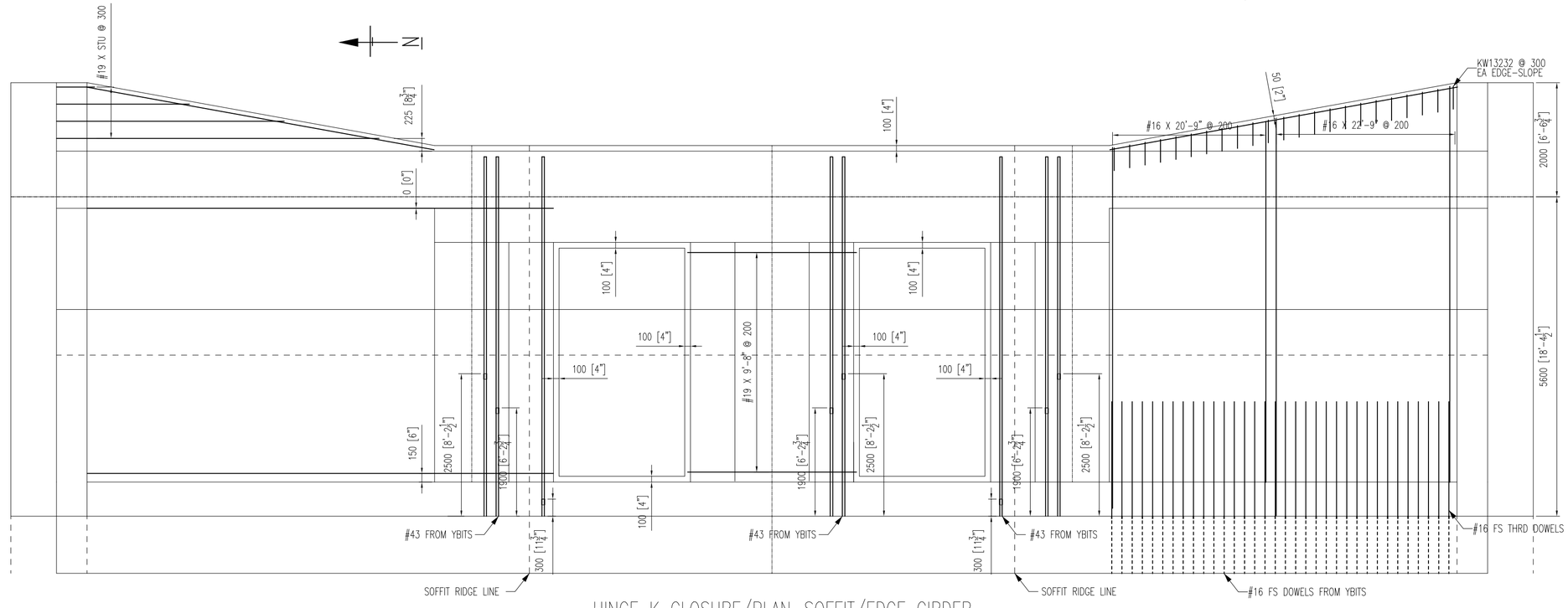

HINGE K CLOSURE/PLAN-SOFFIT/EDGE GIRDER

144-#43 DEXTRA BAR TEC THREADS

KW-ST	23852.46lbs

Contractor: MCM CONSTRUCTION, INC
Customer: CAL TRANS
Refer to Run No: KW-ST

Date	Drawn	Chkd.	Contract No.	Dwg. No.
01/07/2012	RJC		13114014	KW-9

Project: YBI TRANSITION STRUCTURES
WESTBOUND BRIDGE

Drawing: HINGE KW CLOSURE
SOFFIT TOP/#43-ELEV/PLAN

Harris Salinas Rebar INC.
355 SOUTH VASCO ROAD, LIVERMORE, CALIFORNIA 94550
TEL. (925) 373-0733 FAX. (925) 373-0136

No.	Description	Date	By
	FOR REVIEW	01/15/2012	RJC
	FOR PLACING	XX/XX/2012	RJC

The full intent and purpose of this drawing is the placing of reinforcing steel bars ONLY. It is NOT to be used as a means of communication between the Architect, Engineer, Contractor or any other Sub-trades.

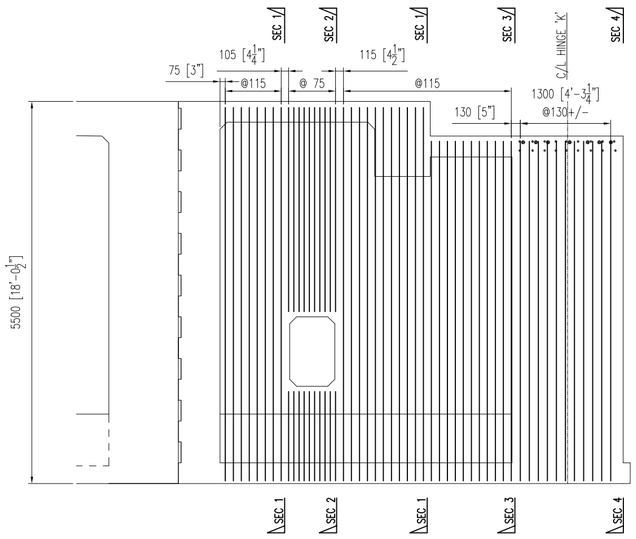

OUTER LONG. DIA.-STIRRUP ELEV

(NORTH DIAPHRAGM SHOWN-SOUTH DIA SIMILAR)

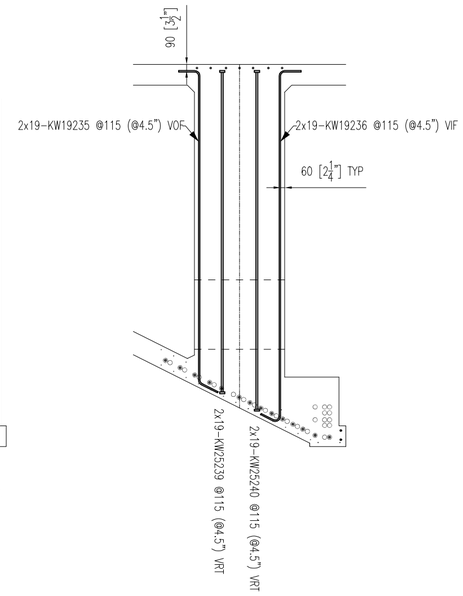

SECTION 1

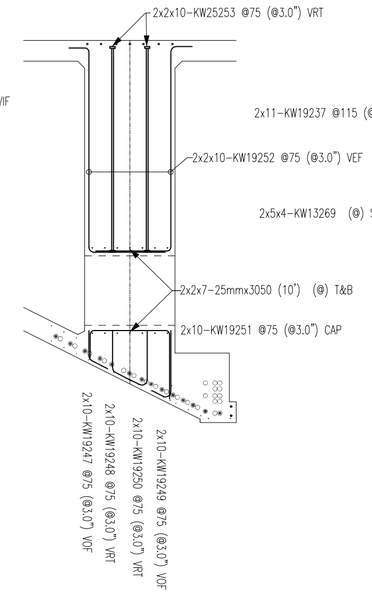

SECTION 2

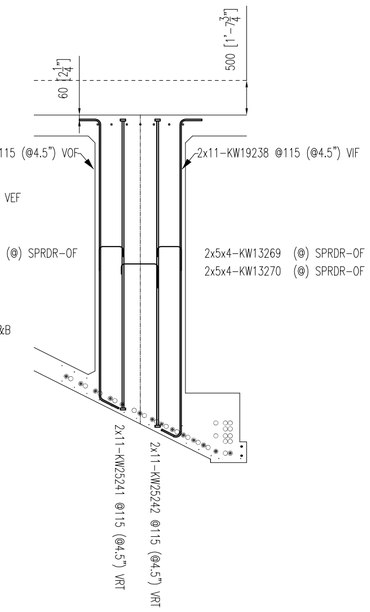

SECTION 3

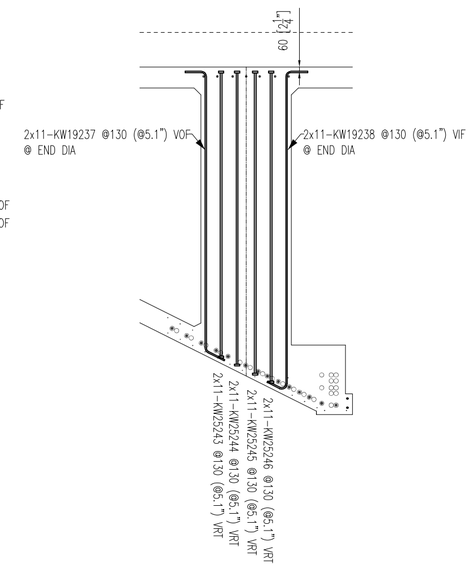

SECTION 4

ADJUST SPACING TO CLEAR #57/#36 BARS @ END DIA.

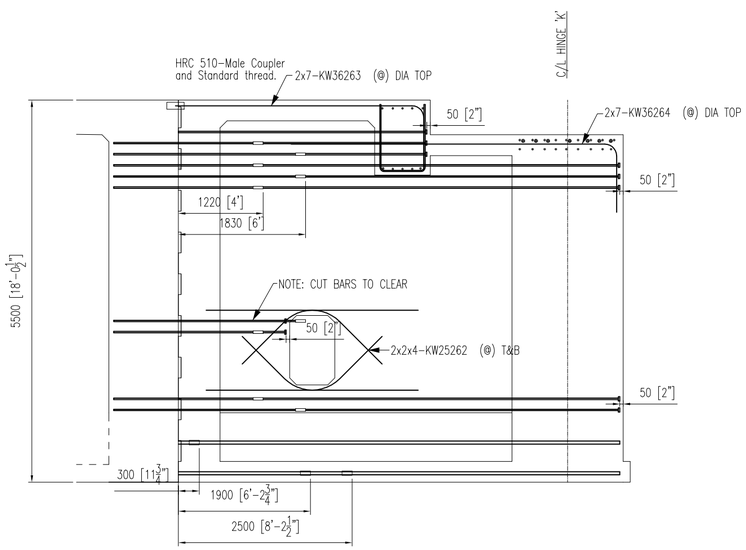

OUTER LONG. DIA.-HORIZONTAL ELEV

(NORTH DIAPHRAGM SHOWN-SOUTH DIA SIMILAR)

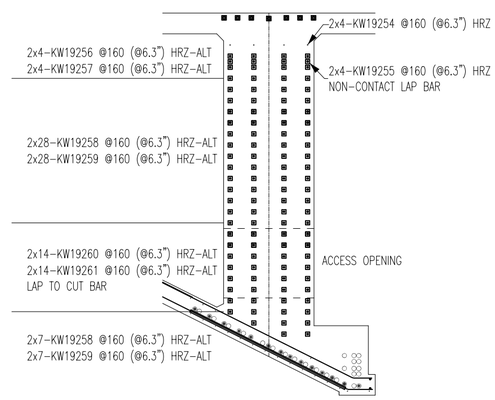

OUTER LONG. DIA.-HORZ-SECTION

(NORTH DIAPHRAGM SHOWN-SOUTH DIA SIMILAR)

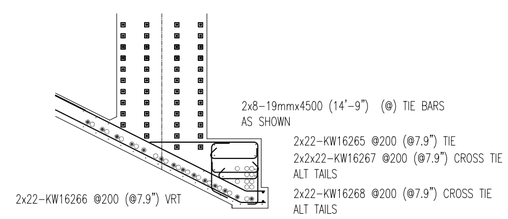

OUTER LONG. DIA.-BLISTER DETAIL

(NORTH DIAPHRAGM SHOWN-SOUTH DIA SIMILAR)

220-#19 DEXTRA BAR TEC HEADS
284-#25 DEXTRA BAR TEC HEADS
14-#36 HRC 510 MALE COUPLERS

KW-OD	21879.70lbs

PLACER NOTE:

INSTALL SOFFIT TOP MAT @ OUTER LONG.DIA.-COMPLETE
INSTALL #43/#25 LONGITUDINAL BARS AT OUTER LONG. DIA. BLISTERS
INSTALL OUTER LONG. DIA. BLISTERS-COMPLETE

Contractor: MCM CONSTRUCTION, INC

Customer: CAL TRANS

Refer to Run No: KW-OD

Date	Drawn	Chkd.	Contract No.	Dwg. No.
01/07/2012	RJC		13114014	KW-10

Project: YBI TRANSITION STRUCTURES
WESTBOUND BRIDGE

Drawing: HINGE KW CLOSURE
OUTER DIA ELEV/SECTION

Harris Salinas Rebar INC.
355 SOUTH VASCO ROAD, LIVERMORE, CALIFORNIA 94550
TEL. (925) 373-0733 FAX. (925) 373-0136

No.	Description	Date	By
	FOR REVIEW	01/15/2012	RJC
	FOR PLACING	XX/XX/2012	RJC

The full intent and purpose of this drawing is the placing of reinforcing steel. It is not to be used as a means of communication between the Architect, Engineer, Contractor or any other Sub-trades.

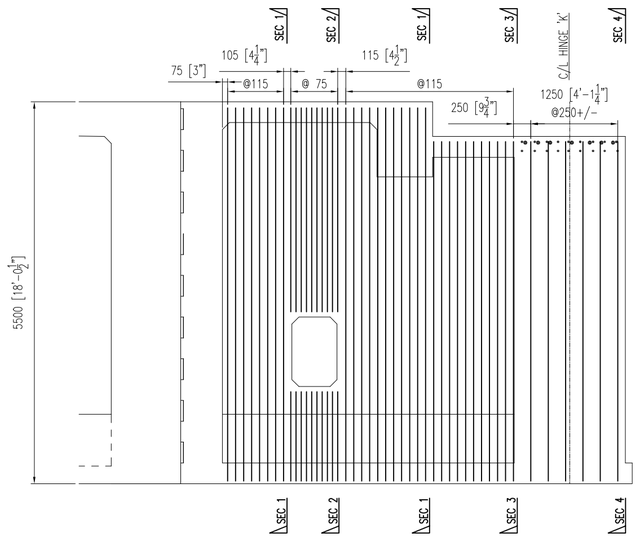

CENTER LONG. DIA.-STIRRUP ELEV

(LOOKING NORTH)

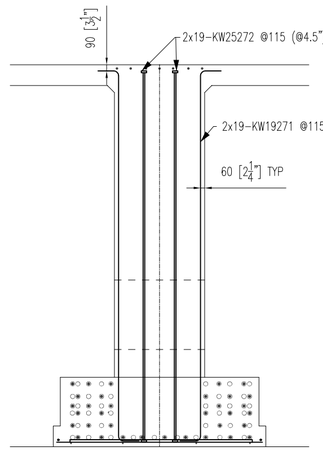

SECTION 1

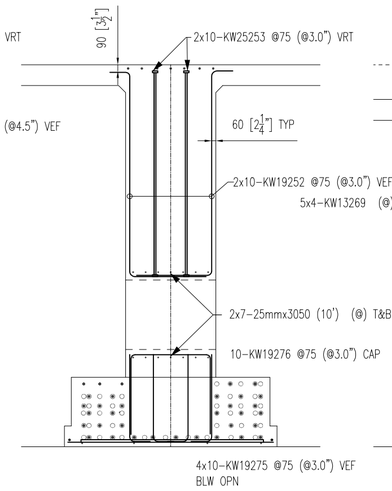

SECTION 2

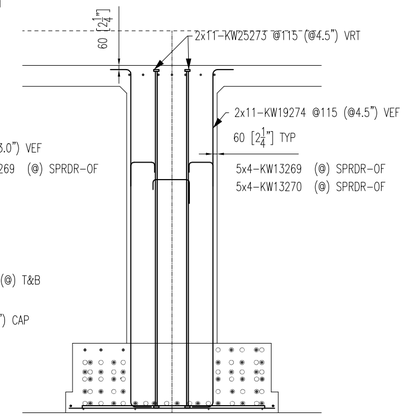

SECTION 3

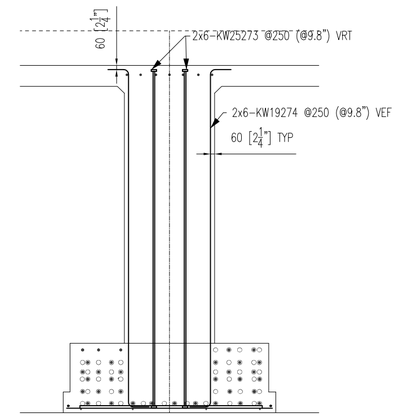

SECTION 4

ADJUST SPACING TO CLEAR #57/#36 BARS @ END DIA.

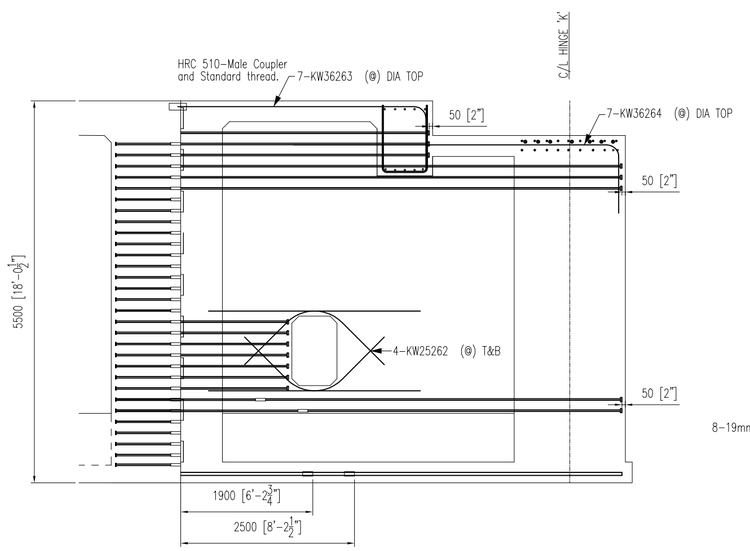

CENTER LONG. DIA.-HORIZONTAL ELEV

(LOOKING NORTH)

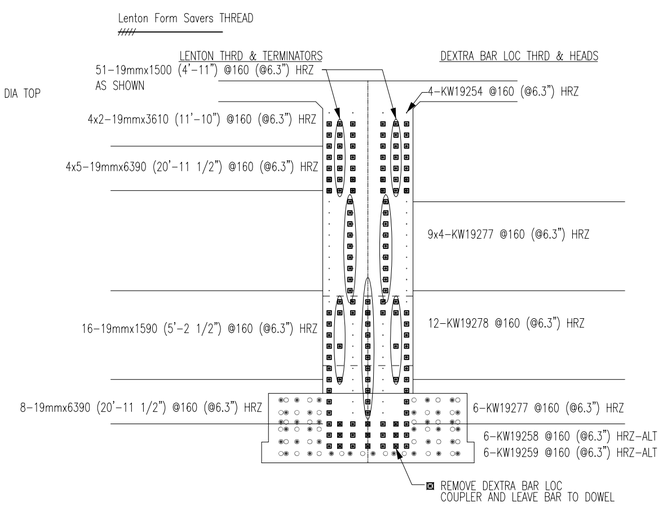

CENTER LONG. DIA.-HORZ-SECTION

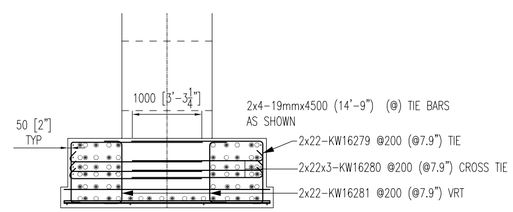

CENTER LONG. DIA.-BLISTER DETAIL

220-#19 DEXTRA BAR TEC HEADS
284-#25 DEXTRA BAR TEC HEADS
14-#36 HRC 510 MALE COUPLERS

KW-MD	13672.46lbs

PLACER NOTE:

INSTALL SOFFIT BOTTOM MAT/'BURY' #36 @ CENTER LONG.DIA.-COMPLETE
INSTALL LOWER #43/#25 LONGITUDINAL BARS AT CENTER LONG. DIA. -COMPLETE
INSTALL #19 ATTACHMENTS @ CENTER LONG. DIA. SD CONST JT.
COMPLETE US FACE CLOSURE DIAPHRAGM
COMPLETE CENTER LONGITUDNAL DIAPHRAGM WALL
INSTALL #43/#25 LONGITUDINAL BARS AT CENTER LONG. DIA. BLISTERS -COMPLETE
COMPLETE CENTER LONGITUDNAL DIAPHRAGM BLISTERS

Contractor: MCM CONSTRUCTION, INC
Customer: CAL TRANS
Refer to Run No: KW-MD

Date	Drawn	Chkd.	Contract No.	Dwg. No.
01/07/2012	RJC		13114014	KW-11

Project: YBI TRANSITION STRUCTURES
WESTBOUND BRIDGE

Drawing: HINGE KW CLOSURE
CENTER DIA ELEV/SECTION

Harris Salinas Rohar INC.
355 SOUTH VASCO ROAD, LIVERMORE, CALIFORNIA 94550
TEL. (925) 373-0733 FAX. (925) 373-0136

No.	Description	Date	By
	FOR REVIEW	01/15/2012	RJC
	FOR PLACING	XX/XX/2012	RJC

The full intent and purpose of this drawing is the placing of reinforcing steel. It is not intended to be a complete communication between the Architect, Engineer, Contractor or any other Sub-trades.

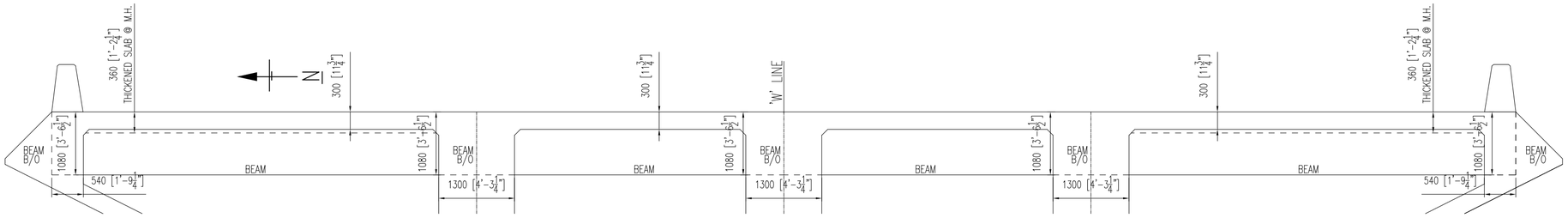

HINGE K CLOSURE/ELEVATION-TOP DECK @ BEAM

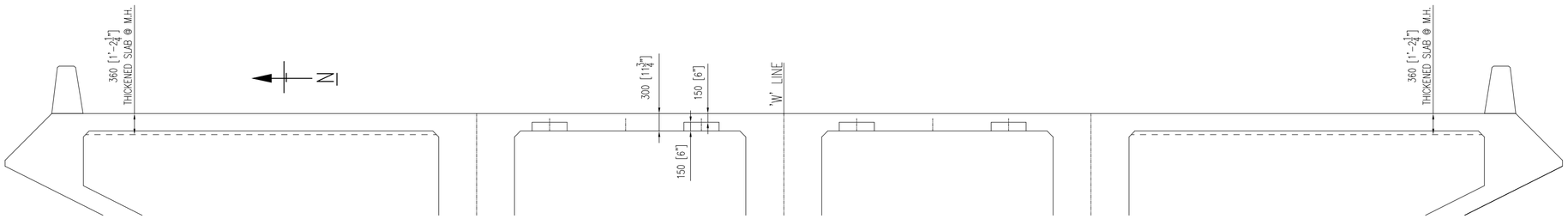

HINGE K CLOSURE/ELEVATION-TOP DECK

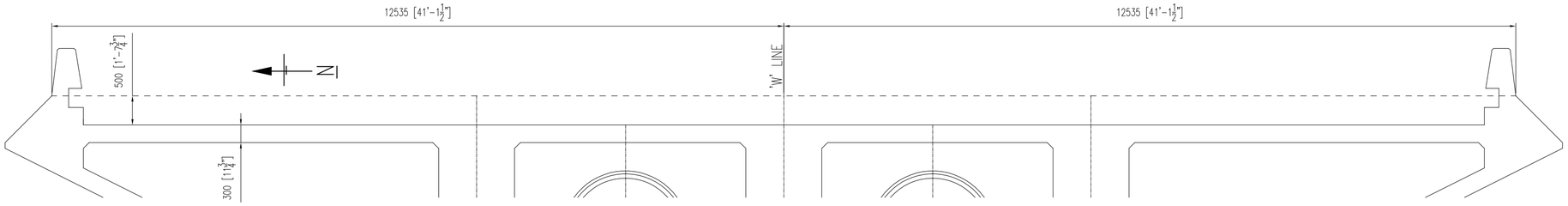

HINGE K CLOSURE/ELEVATION-TOP DECK @ JOINT B/O

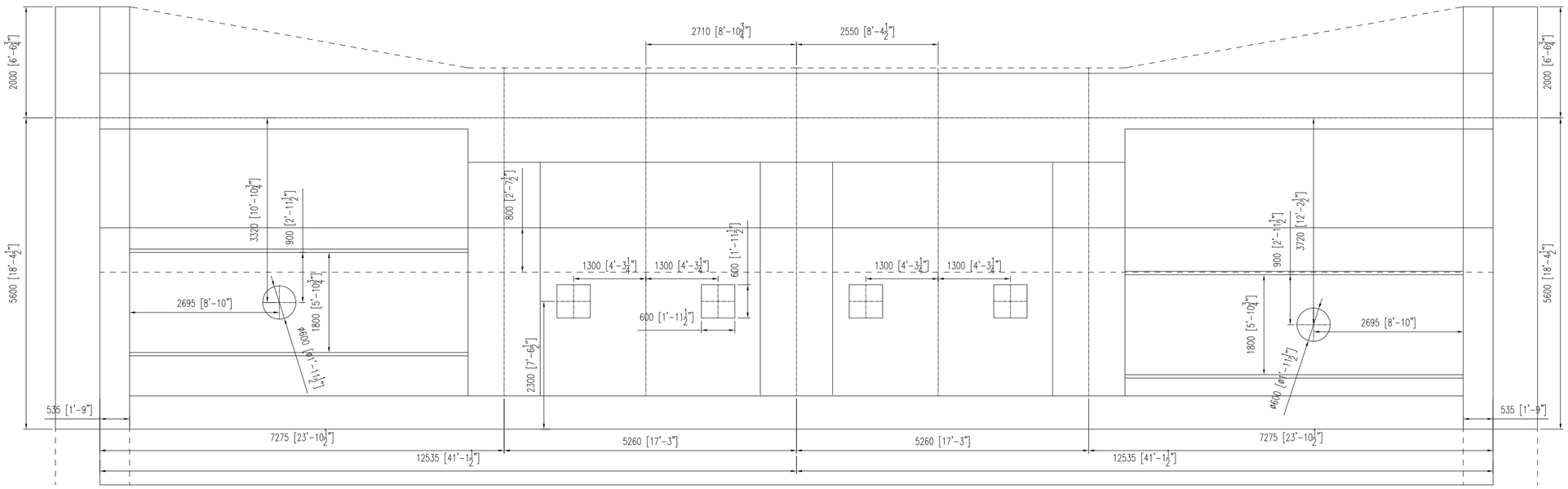

HINGE K CLOSURE/PLAN-TOP DECK

Contractor: MCM CONSTRUCTION, INC

Customer: CAL TRANS

Refer to Run No: KW-TD

Date	Drawn	Chkd.	Contract No.	Dwg. No.
01/07/2012	RJC		13114014	KW-12

Project: YBI TRANSITION STRUCTURES
WESTBOUND BRIDGE

Drawing: HINGE KW CLOSURE
TOP DECK PLAN/ELEV

Harris Salinas Rebar INC.
355 SOUTH VASCO ROAD, LIVERMORE, CALIFORNIA 94550
TEL. (925) 373-0733 FAX. (925) 373-0136

No.	Description	Date	By
	FOR REVIEW	01/15/2012	RJC
	FOR PLACING	XX/XX/2012	RJC

The full intent and purpose of this drawing is the placing of reinforcing steel. Any deviations shall be approved by the communication between the Architect, Engineer, Contractor or any other Sub-trades.

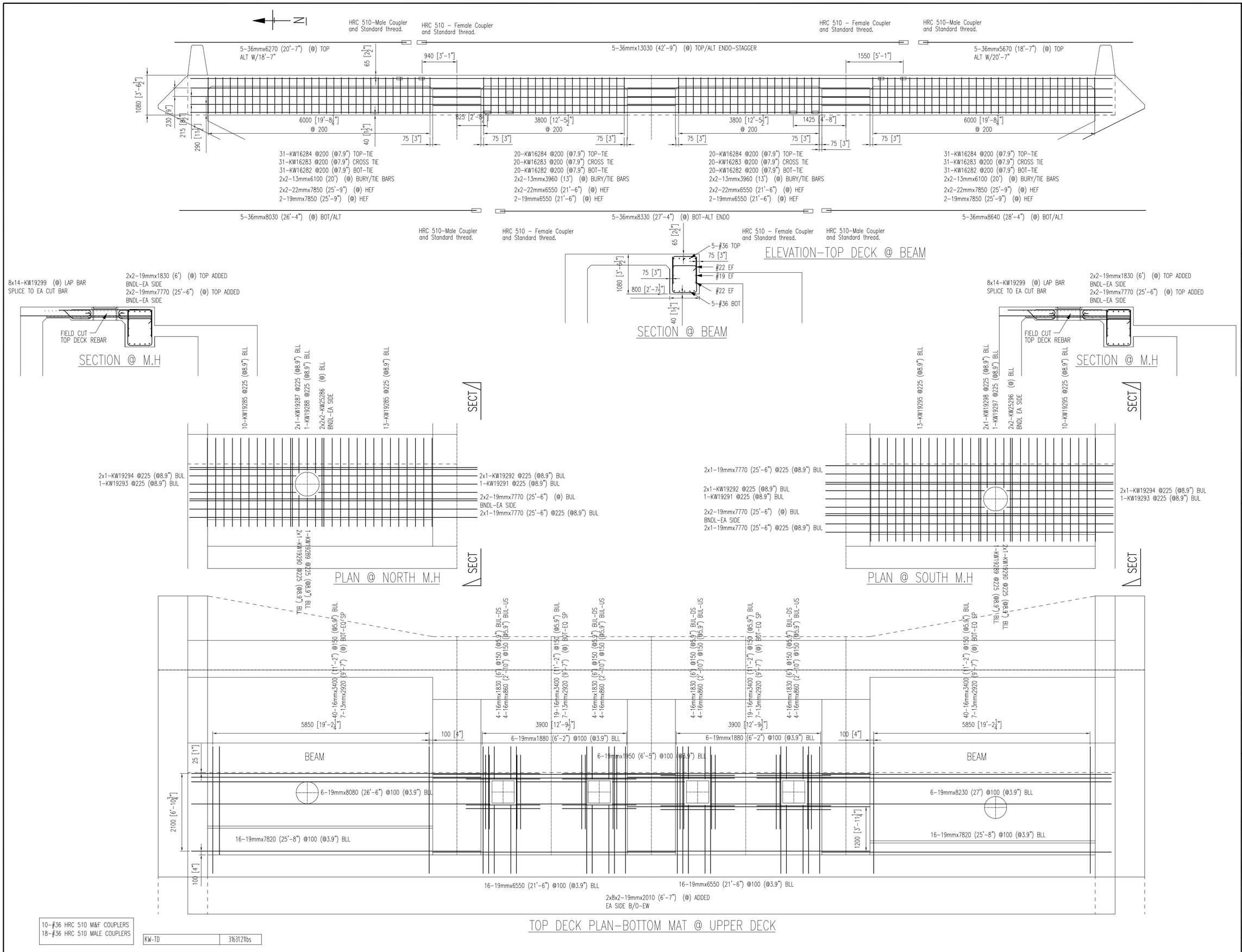

10-#36 HRC 510 M&F COUPLERS
18-#36 HRC 510 MALE COUPLERS

KW-TD	316312lbs

Contractor: MCM CONSTRUCTION, INC
Customer: CAL TRANS
Refer to Run No: KW-TD

Date	Drawn	Chkd.	Contract No.	Dwg. No.
01/07/2012	RJC		13114014	KW-13

Project: YBI TRANSITION STRUCTURES WESTBOUND BRIDGE

Drawing: HINGE KW CLOSURE TOP DECK-BOT/BEAM PLAN/ELEV

Harris Salinas Rebar INC.
355 SOUTH VASCO ROAD, LIVERMORE, CALIFORNIA 94550
TEL. (925) 373-0733 FAX. (925) 373-0136

No.	Description	Date	By
	FOR REVIEW	01/15/2012	RJC
	FOR PLACING	XX/XX/2012	RJC

The full intent and purpose of this drawing is the placing of reinforcing steel. Any other use, including means of communication between the Architect, Engineer, Contractor or any other Sub-trades.

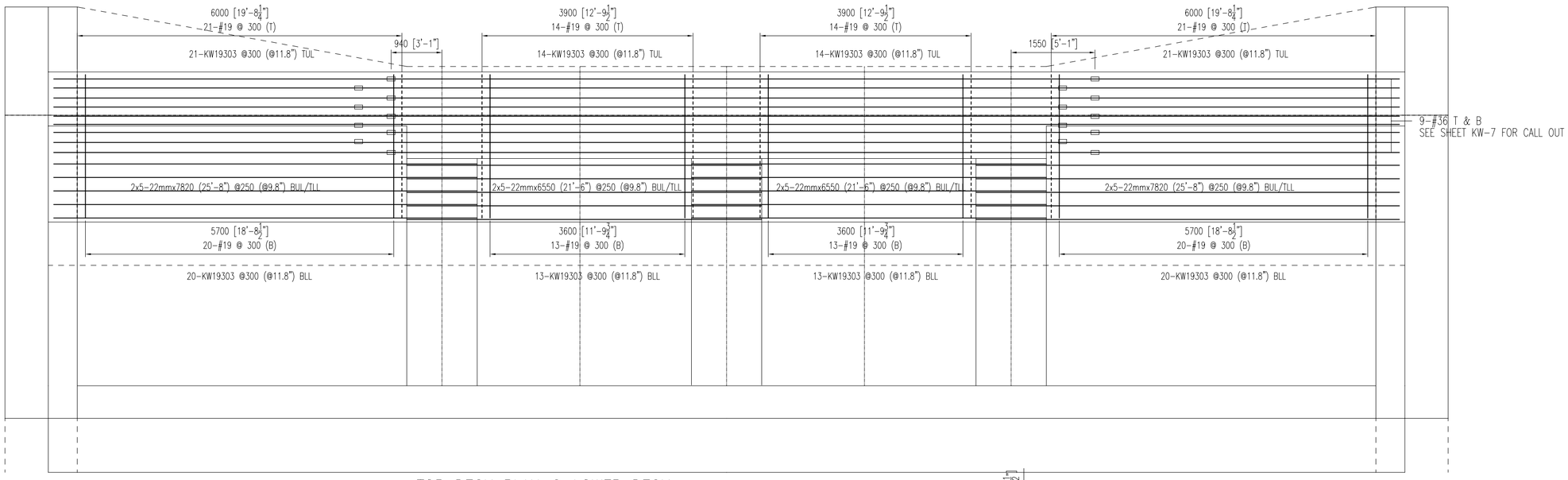

TOP DECK PLAN @ LOWER DECK

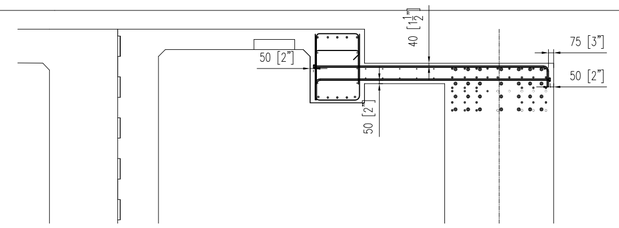

TOP DECK ELEVATION @ LOWER DECK

C/L HINGE 'K'

N

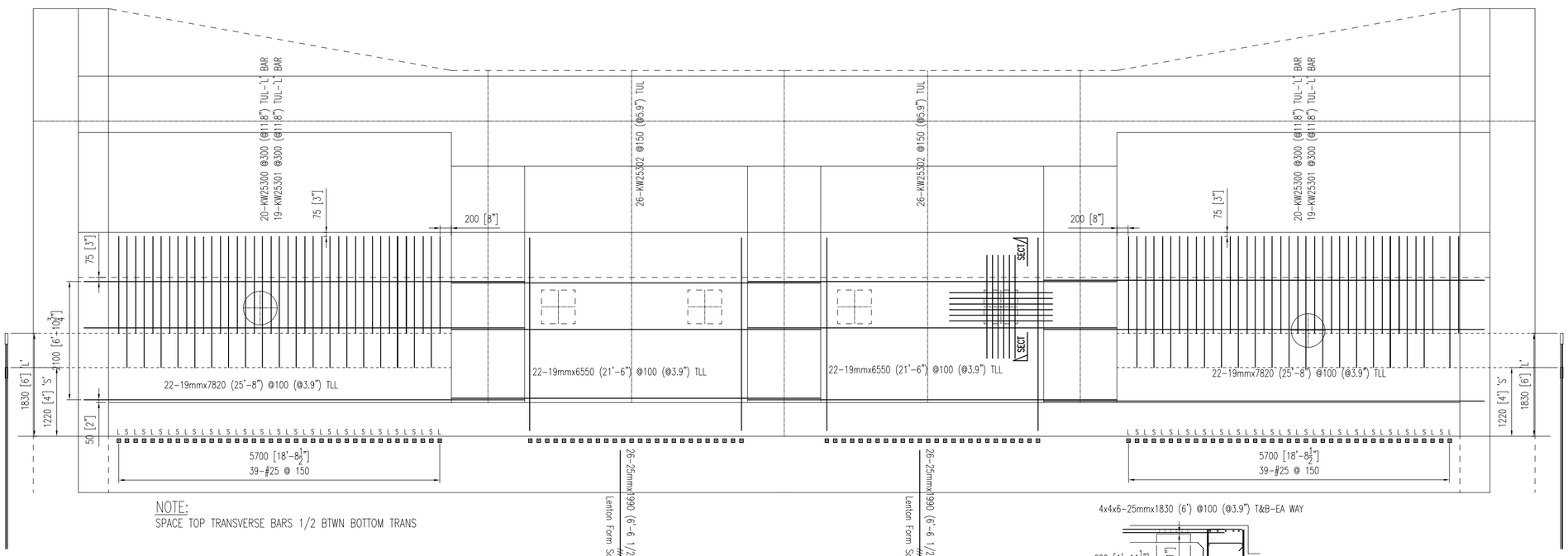

NOTE:
SPACE TOP TRANSVERSE BARS 1/2 BTWN BOTTOM TRANS

TOP DECK PLAN-TOP MAT @ UPPER DECK

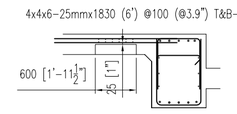

SECTION-PARTIAL DEPTH BLOCKOUT
4 LOCATIONS

Contractor: MCM CONSTRUCTION, INC
Customer: CAL TRANS
Refer to Run No: KW-TD

Date	Drawn	Chkd.	Contract No.	Dwg. No.
01/07/2012	RJC		13114014	KW-14

Project: YBI TRANSITION STRUCTURES
WESTBOUND BRIDGE

Drawing: HINGE KW CLOSURE
TOP DECK-TOP PLAN/ELEV

Harris Salinas Rebar INC.
355 SOUTH VASCO ROAD, LIVERMORE, CALIFORNIA 94550
TEL. (925) 373-0733 FAX. (925) 373-0136

No.	Description	Date	By
	FOR REVIEW	01/15/2012	RJC
	FOR PLACING	XX/XX/2012	RJC

The full intent and purpose of this drawing is the placing of reinforcing steel in the field. Any deviations, modifications or communication between the Architect, Engineer, Contractor or any other Sub-trades.

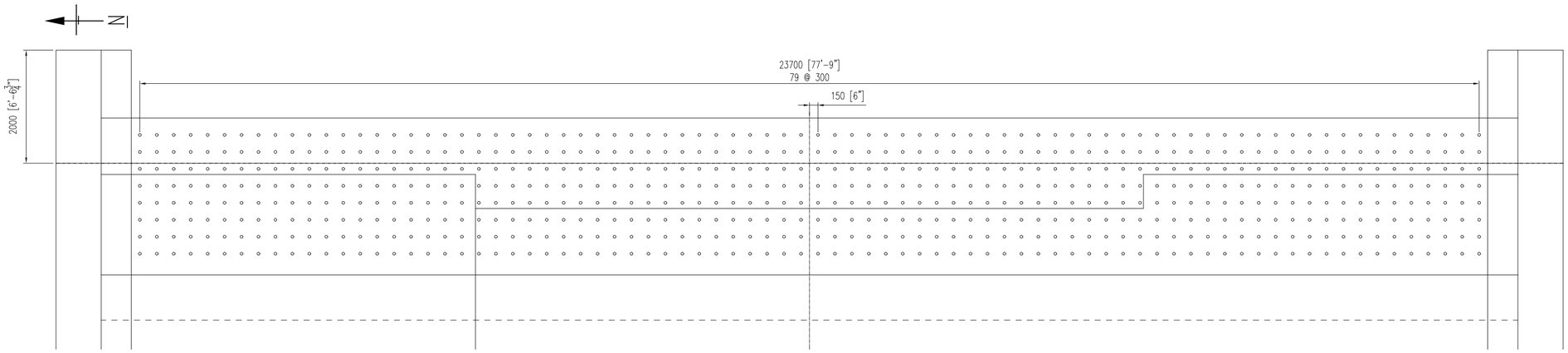

YBITS EXPANSION JOINT DOWEL LAYOUT-PLAN

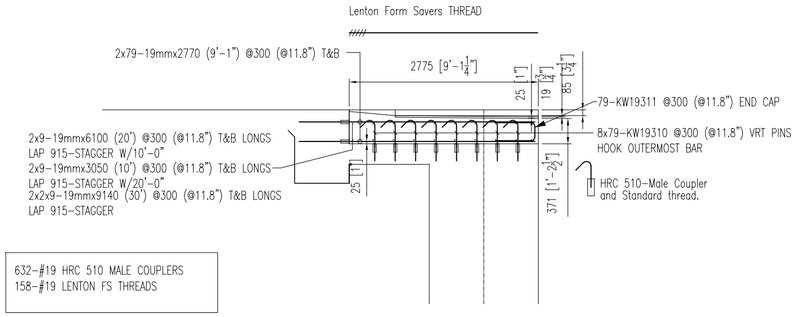

632-#19 HRC 510 MALE COUPLERS
158-#19 LENTON FS THREADS

KW-EJ	7135.07lbs

EXPANSION JOINT POURBACK-YBITS

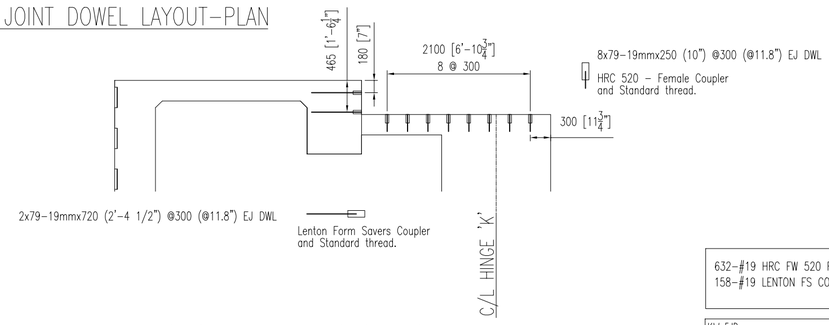

632-#19 HRC FW 520 FEMALE COUPLERS
158-#19 LENTON FS COUPLERS

KW-EJD	1339.05lbs

EXPANSION JOINT DOWEL CALLOUT-YBITS

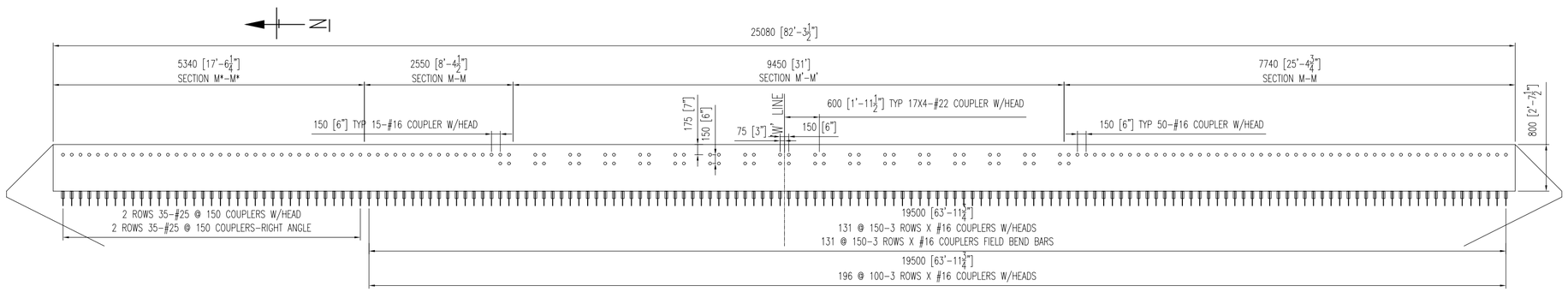

EXPANSION JOINT POURBACK/ELEVATION-SAS

70-#25 HRC 510 MALE COUPLERS
70-#25 HRC 500 FW MALE COUPLERS
70-#25 HRC 120 FW HEADS
68-#22 HRC 500 FW MALE COUPLERS
68-#22 HRC 120 FW HEADS
1,143-#16 HRC 500 FW MALE COUPLERS
1,081-#16 HRC 120 FW HEADS

KW-EJS	13715.07lbs

TOTAL WEIGHT 225,004lbs

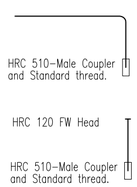

SECTION M*-M* VERT CALL OUT

35-KW25316 @150 (@5.9") VERT
35-KW25317 @150 (@5.9") VERT
2x35-25mmx760 (2'-6") @150 (@5.9") VRT-HEAD
35-16mmx1730 (5'-8") @150 (@5.9") HRZ-HEAD

SECTIONS M'-M' & M-M VERT CALL OUT

131-16mmx2440 (8') @150 (@5.9") VOF-FIELD BEND
2x131-16mmx1780 (5'-10") @150 (@5.9") VIF-FIELD BEND
3x131-16mmx760 (2'-6") @150 (@5.9") VRT-HEAD(T)
3x196-16mmx360 (1'-2") @100 (@3.9") VRT-HEAD(S)
65-16mmx1730 (5'-8") @150 (@5.9") HRZ-HEAD
17x4-22mmx1730 (5'-8") @600 (@23.6") HRZ-HEAD M'-M'

HORIZONTALS/LONGS CALL OUT

2x2-19mmx6700 (22') @300 (@11.8") DSF HRZ
LAP 915-STAGGER W/10'-0"
2x2-19mmx3050 (10') @300 (@11.8") DSF HRZ
LAP 915-STAGGER W/22'-0"
2x2x2-19mmx9140 (30') @300 (@11.8") DSF HRZ
LAP 915-STAGGER

25-16mmx6700 (22') (@) T&B/HRZ
LAP 740-STAGGER W/10'-0"
25-16mmx3050 (10') (@) T&B/HRZ
LAP 740-STAGGER W/22'-0"
2x25-16mmx9140 (30') (@) T&B/HRZ
LAP 740-STAGGER

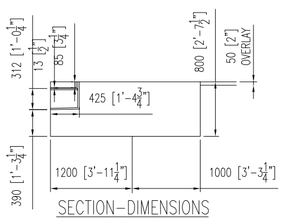

SECTION-DIMENSIONS

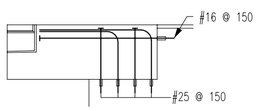

SECTION M*-M*

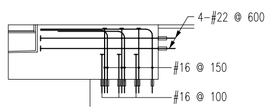

SECTION M'-M'

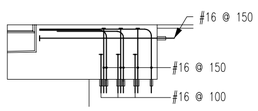

SECTION M-M

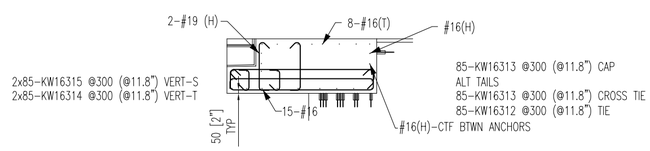

SECTION-STIRRUPS/HRZ

Contractor: MCM CONSTRUCTION, INC
Customer: CAL TRANS
Refer to Run No: KW-TD

Date	Drawn	Chkd.	Contract No.	Dwg. No.
01/07/2012	RJC		13114014	KW-15

Project: YBI TRANSITION STRUCTURES
WESTBOUND BRIDGE

Drawing: HINGE KW CLOSURE
TOP DECK PLAN/ELEV

Harris Salinas Rebar INC.
355 SOUTH VASCO ROAD, LIVERMORE, CALIFORNIA 94550
TEL. (925) 373-0733 FAX. (925) 373-0136

No.	Description	Date	By
	FOR REVIEW	01/15/2012	RJC
	FOR PLACING	XX/XX/2012	RJC

The full intent and purpose of this drawing is the placing of reinforcing steel. Any other use, including use by means of communication, between the Architect, Engineer, Contractor or any other Sub-trades.