DIST.	COUNTY	ROUTE	KILOMETER POST TOTAL PROJECT	SHEET NO.	TOTAL SHEETS
04	SF	80/SAS	13.2/13.9	1166S33	1204
		80/YBITS	12.7/13.2	K715A	806

Caltrans Metric

REGISTERED ENGINEER - CIVIL

01-20-12

PLANS APPROVAL DATE

REGISTERED PROFESSIONAL ENGINEER A.L. ELY No. 18880 Exp. 6-30-13 CIVIL STATE OF CALIFORNIA

The State of California or its officers or agents shall not be responsible for the accuracy or completeness of electronic copies of this plan sheet.

T.Y. LIN / MOFFATT & NICHOL
TWO HARRISON STREET
SAN FRANCISCO, CA 94105

SUPPLEMENTAL SHEET

CONTRACT CHANGE ORDER NO. 216
SHEET 47 OF 55

REQUESTS FOR INFORMATION NOT ADDRESSED IN THIS CCO REMAIN IN FORCE

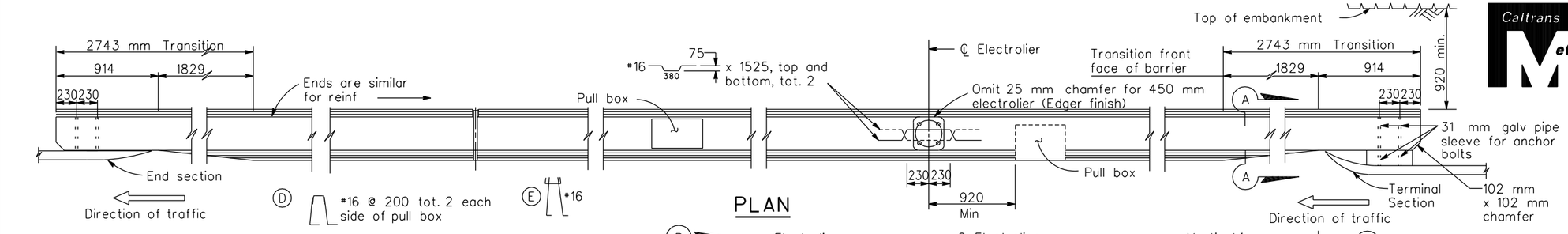

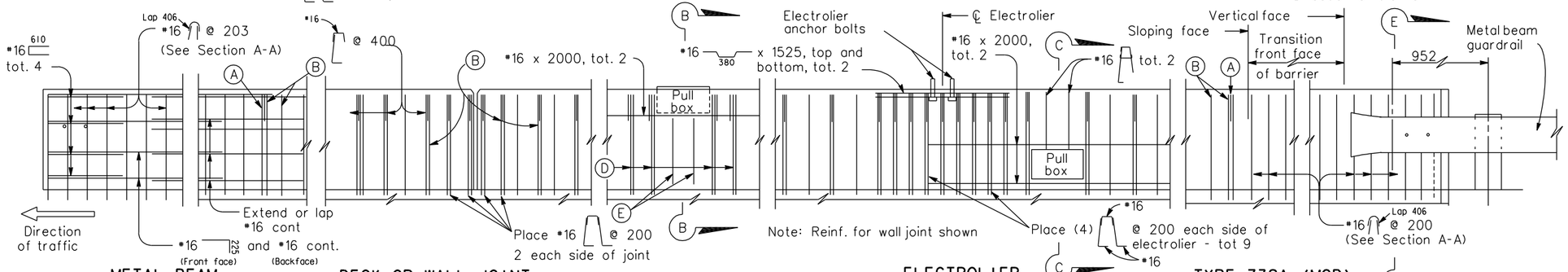

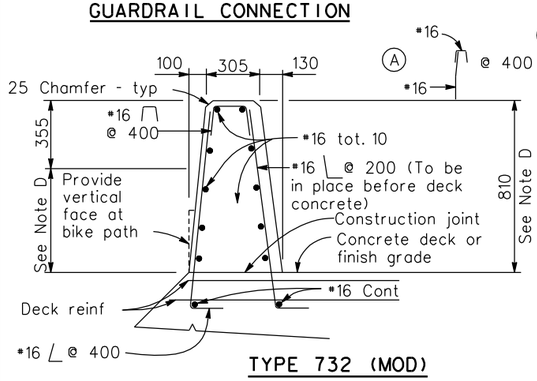

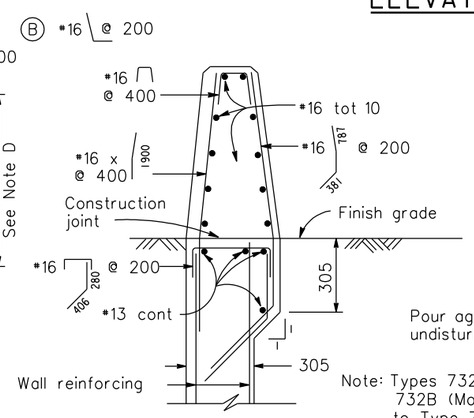

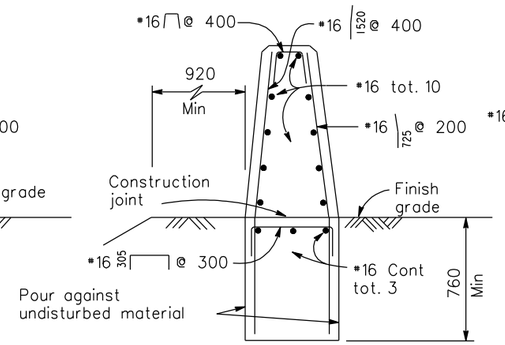

Note: Types 732A (Mod) & 732B (Mod) are similar to Type 732 (Mod) except as noted

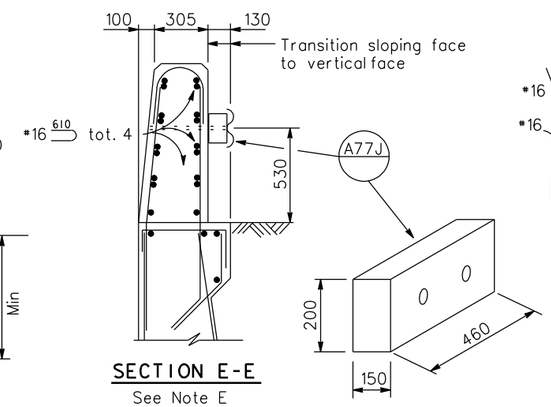

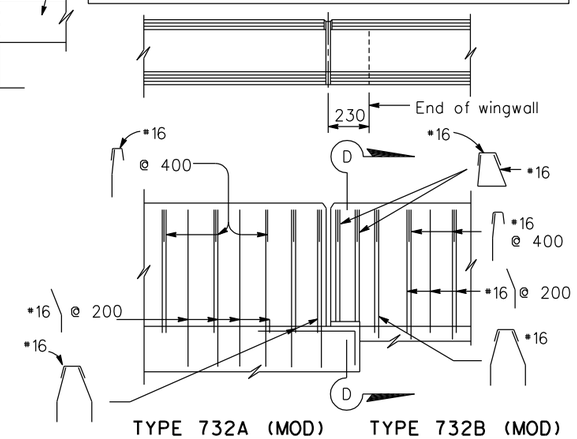

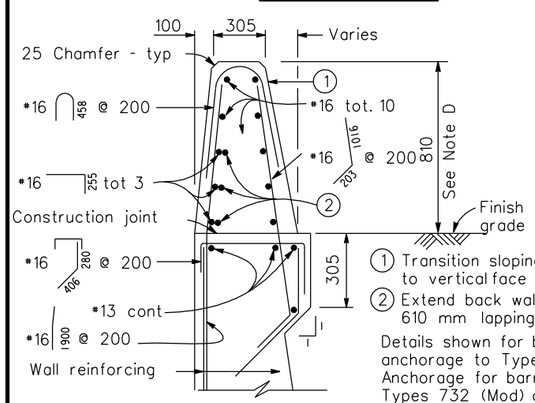

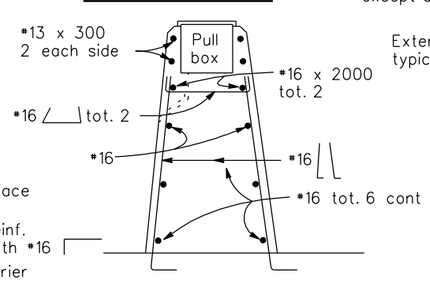

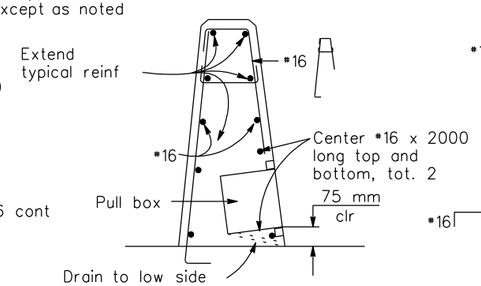

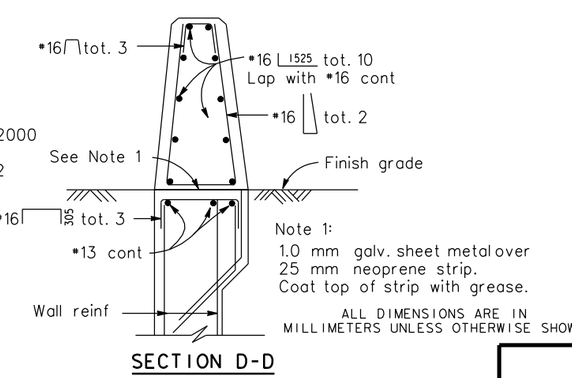

NOTES

A. Walls are to be backfilled before barrier is placed.

B. Clearance to reinforcing steel in barrier to be 25 mm, except as noted. Longitudinal reinforcement to stop at all expansion joints.

C. See project plans for locations of electroliers and pull boxes.

D. Dimensions may vary with roadway cross slope and with certain thickness of surfacing. See Project Plans.

E. For Metal Beam Guardrail Connection details not shown, see General Plan and Standard Plans.

F. Refer to Project Plans and Standard Plan Sheets ES-9A, ES-9C and ES-9D for electrical details concerning barriers. The maximum number of conduits in a barrier is limited to two (2) 50 mm conduits (max.) along with one (1) 75 mm conduit. When a 75 mm conduit is used, it is restricted to the base of barrier.

G. Minimum concrete edge distance to reinforcing shown, shall be maintained, edge distance may be adjusted to accomodate increase in concrete cover for architectural treatment. See Typical Section.

DESIGN OVERSIGHT ADE AKINSANYA

SIGN OFF DATE

Rev. Date: 5-18-98

MARK	DATE	DESCRIPTIONS	BY	CH'D	CCO#
0	01/20/12	YBI CLOSURE POUR	TL	JB	216

REVISIONS

	BY	CHECKED
DESIGN	Desai	Jain
DETAILS	van Ryn/Zucchi/Mai	Jain
QUANTITIES	Liao	E. Nichol

PREPARED FOR THE STATE OF CALIFORNIA DEPARTMENT OF TRANSPORTATION

Jal Birdy
PROJECT ENGINEER

BRIDGE NO. 34-0006 L/R
KILOMETER POST 12.8

SAN FRANCISCO OAKLAND BAY BRIDGE
EAST SPAN SEISMIC SAFETY PROJECT

YBI TRANSITION STRUCTURES - HINGE K

CONCRETE BARRIER TYPE 732 (MOD)

ORIGINAL SCALE IN MILLIMETERS FOR REDUCED PLANS 0 10 20 30 40 50 60 70 80 90 100

CU 04
EA 0120F1

DISREGARD PRINTS BEARING EARLIER REVISION DATES

REVISION DATES (PRELIMINARY STAGE ONLY)

SHEET K166A OF 209

FILE => L:\BB\04-012001\SAS\Contract Plans and CCO\CCO\CCO#216\DGN\ybits-u-concbar.dgn

Jan 6, 2012

USERNAME => arivera DATE PLOTTED => 01 JUN 2012 TIME PLOTTED => 08:50:53