DIST.	COUNTY	ROUTE	KILOMETER POST TOTAL PROJECT	SHEET NO.	TOTAL SHEETS
04	SF	80/SAS	13.2/13.9	1166S30	1204
		80/YBITS	12.7/13.2	K705BA	806

Caltrans Metric

REGISTERED ENGINEER - CIVIL

01-20-12

PLANS APPROVAL DATE

REGISTERED PROFESSIONAL ENGINEER Marwan N. Nader No. C 054426 Exp. 12/31/13 CIVIL STATE OF CALIFORNIA

The State of California or its officers or agents shall not be responsible for the accuracy or completeness of electronic copies of this plan sheet.

T.Y. LIN / MOFFATT & NICHOL
TWO HARRISON STREET
SAN FRANCISCO, CA 94105

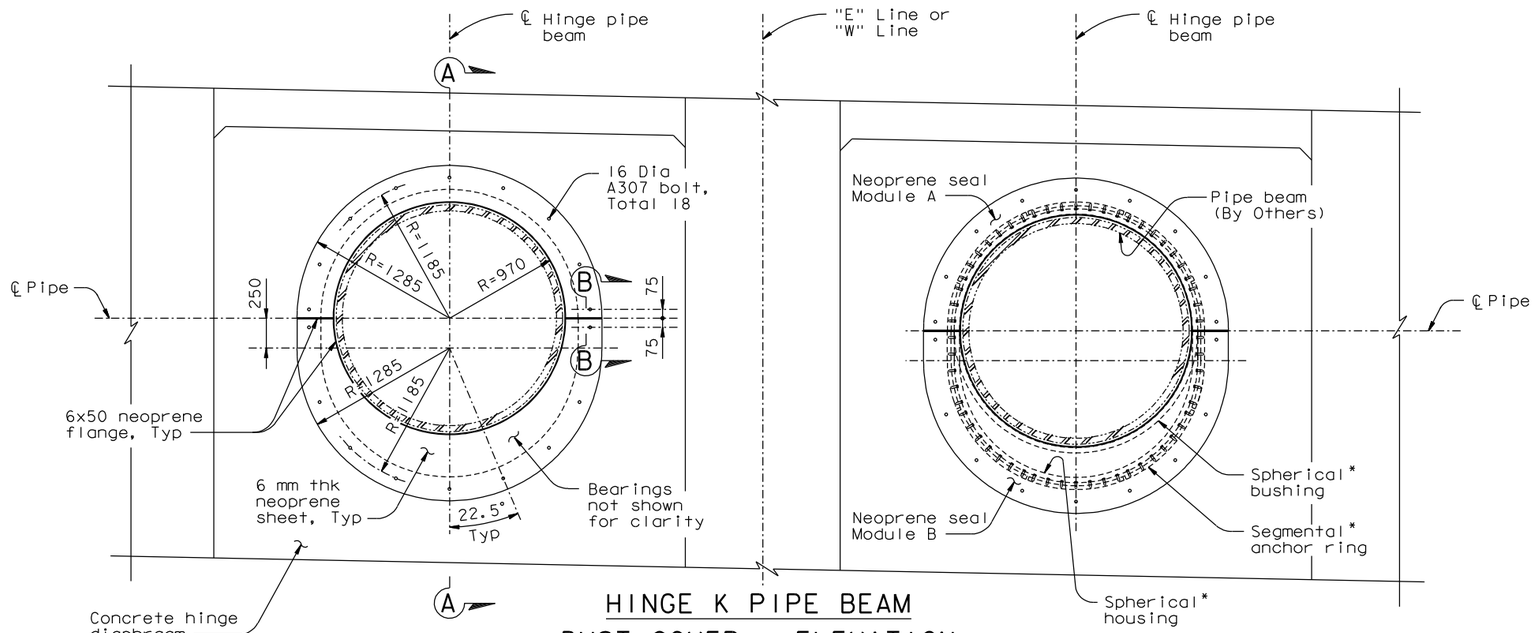

HINGE K PIPE BEAM DUST COVER - ELEVATION

1:25

(WB Shown, EB Similar)

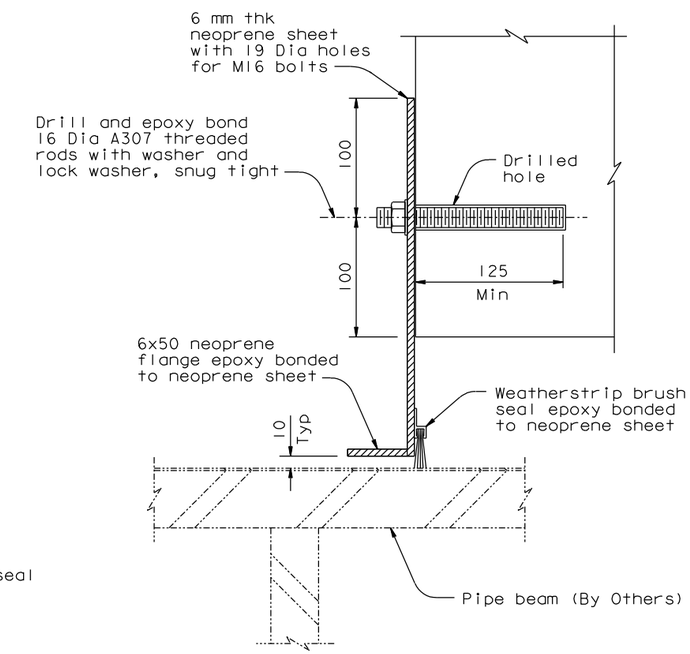

DETAIL A (Detail A' Similar)

1:2.5

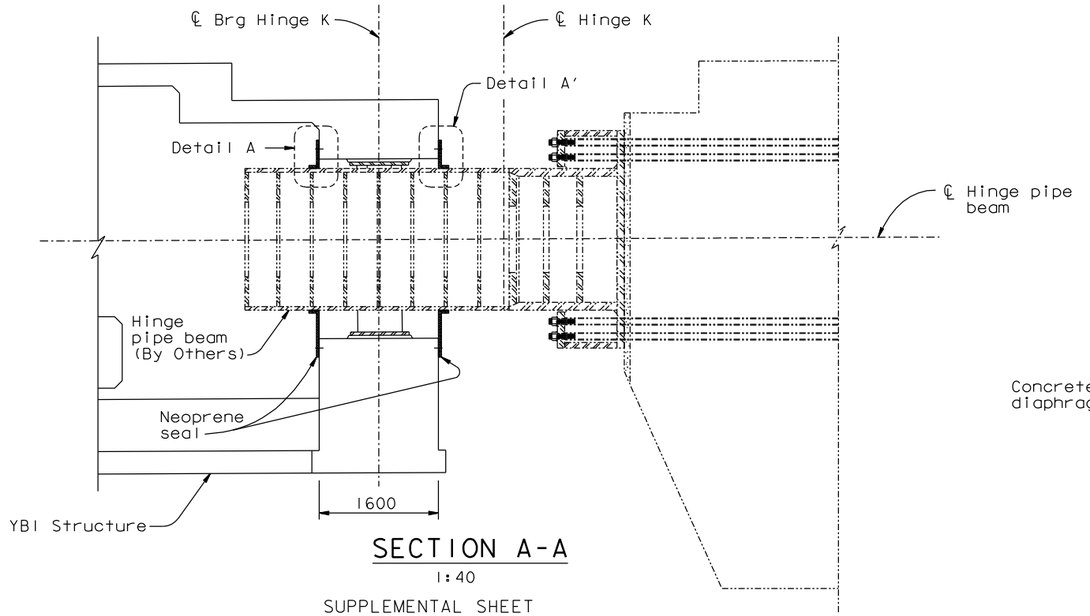

SECTION A-A

1:40

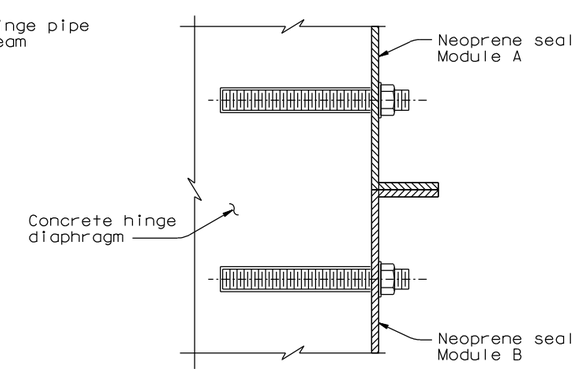

SECTION B-B

1:2.5

NOTES:

* Furnished by Others; Erection in this contract.

SUPPLEMENTAL SHEET

CONTRACT CHANGE ORDER NO. 216
SHEET 44 OF 55

REQUESTS FOR INFORMATION NOT ADDRESSED IN THIS CCO REMAIN IN FORCE

MARK	DATE	DESCRIPTIONS	BY	CH'D	CCO#
0	01/20/12	YBI CLOSURE POUR	RM	MW	216

REVISIONS

DESIGN OVERSIGHT ADE AKINSANYA

SIGN OFF DATE

Rev. Date: 5-18-98

	BY		CHECKED	
DESIGN	BY	N. Vo	CHECKED	M. Nader
DETAILS	BY	H. Patel	CHECKED	J. Duxbury
QUANTITIES	BY	H. Patel	CHECKED	J. Duxbury

PREPARED FOR THE STATE OF CALIFORNIA DEPARTMENT OF TRANSPORTATION

Jal Birdy
PROJECT ENGINEER

BRIDGE NO. 34-0006 L/R
KILOMETER POST 12.8

SAN FRANCISCO OAKLAND BAY BRIDGE
EAST SPAN SEISMIC SAFETY PROJECT

YBI TRANSITION STRUCTURES - HINGE K

HINGE K PIPE BEAM DUST COVER DETAILS

ORIGINAL SCALE IN MILLIMETERS FOR REDUCED PLANS 0 10 20 30 40 50 60 70 80 90 100

CU 04
EA 0120F1

DISREGARD PRINTS BEARING EARLIER REVISION DATES

REVISION DATES (PRELIMINARY STAGE ONLY)

SHEET K156BA OF 209

FILE => I:\bb\04-01200I\sas\contract plans and cco\cco\cco#216\dgn\ybits-n-hngexpjt11.dgn

Jan 6, 2012

USERNAME => orivera DATE PLOTTED => 30 MAY 2012 TIME PLOTTED => 13:31:12