DIST.	COUNTY	ROUTE	KILOMETER POST TOTAL PROJECT	SHEET NO.	TOTAL SHEETS
04	SF	80/SAS	13.2/13.9	1166S29	1204
		80/YBITS	12.7/13.2	K705AA	806

Caltrans Metric

REGISTERED ENGINEER - CIVIL

01-20-12
PLANS APPROVAL DATE

REGISTERED PROFESSIONAL ENGINEER
Marwan N. Nader
No. C 054426
Exp. 12/31/13
CIVIL
STATE OF CALIFORNIA

The State of California or its officers or agents shall not be responsible for the accuracy or completeness of electronic copies of this plan sheet.

T.Y. LIN / MOFFATT & NICHOL
TWO HARRISON STREET
SAN FRANCISCO, CA 94105

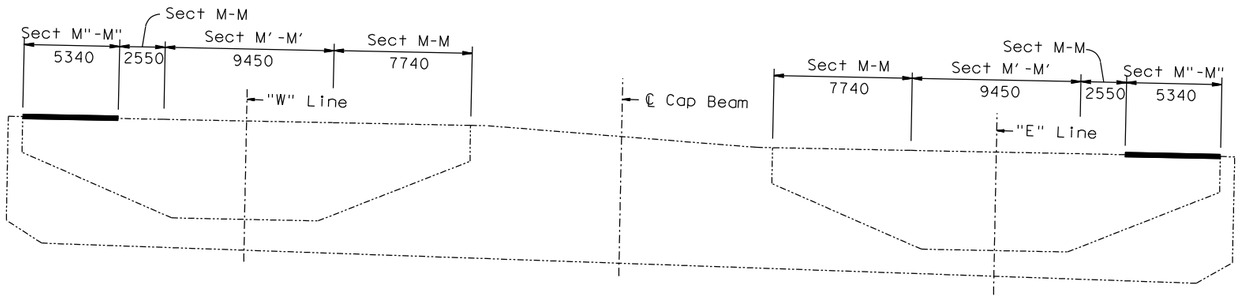

Note: Hinge KE & KW Expansion Joints to be furnished by others and installed by the Contractor.

LOCATION - SECTION M"-M"

NTS

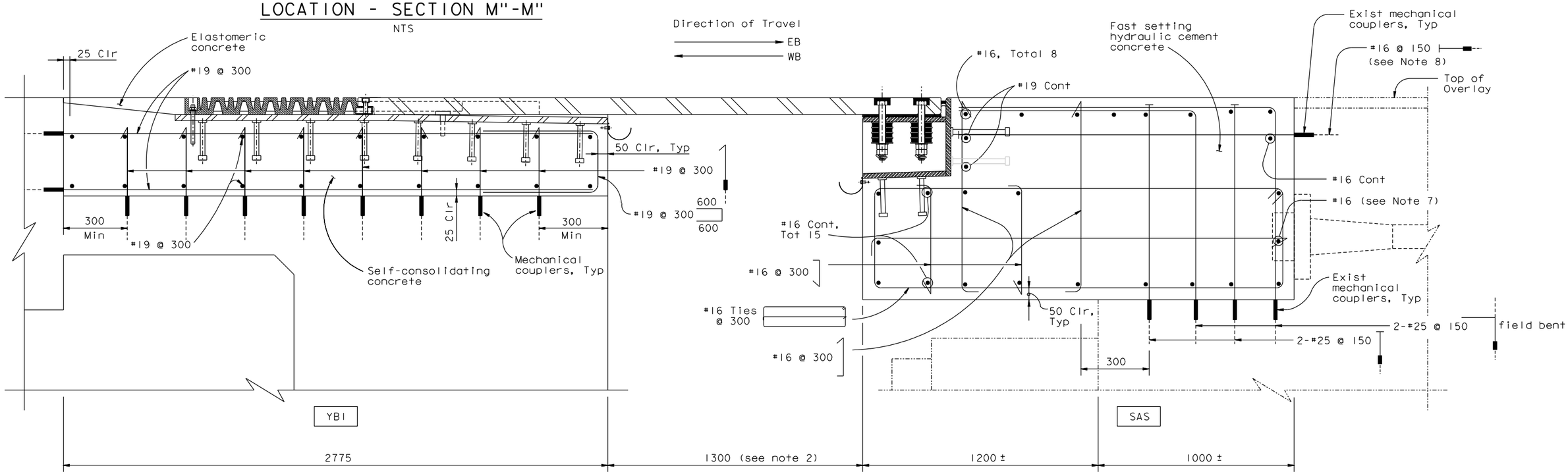

SECTION M"-M"

1:10

LEGEND:

⊢— indicates "T" head reinforcement.

NOTES:

1. Rebars with mechanical couplers shall extend beyond blockout limits by at least 50 d_b.
2. Values are for mean temperature 20°C.
3. Contractor shall locate all existing mechanical couplers.
4. Contractor shall connect reinforcement to existing rebar couplers at blockout limits.
5. Rebars may be relocated to match existing couplers.
6. Mechanical couplers at SAS side provided by Others.
7. Rebar shall be discontinued 25 mm clear of postensionong hardware.
8. Rebar may be bent horizontally to clear anchor studs on channel assembly.

SUPPLEMENTAL SHEET
CONTRACT CHANGE ORDER NO. 216
SHEET 43 OF 55

REQUESTS FOR INFORMATION NOT ADDRESSED IN THIS CCO REMAIN IN FORCE

ALL DIMENSIONS ARE IN MILLIMETERS UNLESS OTHERWISE SHOWN

MARK	DATE	DESCRIPTIONS	BY	CH'D	CCO#
0	01/20/12	YBI CLOSURE POUR	RM	MW	216

REVISIONS

DESIGN OVERSIGHT
ADE AKINSANYA
SIGN OFF DATE

	BY		CHECKED	
DESIGN	BY	C. Redfield	CHECKED	M. Nader
DETAILS	BY	H. Patel	CHECKED	J. Duxbury
QUANTITIES	BY	H. Patel	CHECKED	J. Duxbury

PREPARED FOR THE STATE OF CALIFORNIA DEPARTMENT OF TRANSPORTATION

Jal Birdy
PROJECT ENGINEER

BRIDGE NO. 34-0006 L/R
KILOMETER POST 12.8

SAN FRANCISCO OAKLAND BAY BRIDGE
EAST SPAN SEISMIC SAFETY PROJECT

YBI TRANSITION STRUCTURES - HINGE K

HINGE KE & KW EXPANSION JOINT DETAILS NO. 10

Rev. Date: 5-18-98

ORIGINAL SCALE IN MILLIMETERS FOR REDUCED PLANS 0 10 20 30 40 50 60 70 80 90 100

CU 04
EA 0120F1

DISREGARD PRINTS BEARING EARLIER REVISION DATES

REVISION DATES (PRELIMINARY STAGE ONLY)

SHEET K156AA OF 209

FILE => I:\bb\04-012001\sas\contract plans and cco\cco\cco#216\dgn\ybits-n-hngexpjt10.dgn

Jan 6, 2012

USERNAME => orivera DATE PLOTTED => 30 MAY 2012 TIME PLOTTED => 13:30:40