DIST.	COUNTY	ROUTE	KILOMETER POST TOTAL PROJECT	SHEET NO.	TOTAL SHEETS
04	SF	80/SAS	13.2/13.9	1166S19	1204
		80/YBITS	12.7/13.2	K681A	806

Caltrans Metric

REGISTERED ENGINEER - CIVIL

01-20-12
PLANS APPROVAL DATE

REGISTERED PROFESSIONAL ENGINEER A.L. ELY No. 18880 Exp. 6-30-13 CIVIL STATE OF CALIFORNIA

The State of California or its officers or agents shall not be responsible for the accuracy or completeness of electronic copies of this plan sheet.

T.Y. LIN / MOFFATT & NICHOL
TWO HARRISON STREET
SAN FRANCISCO, CA 94105

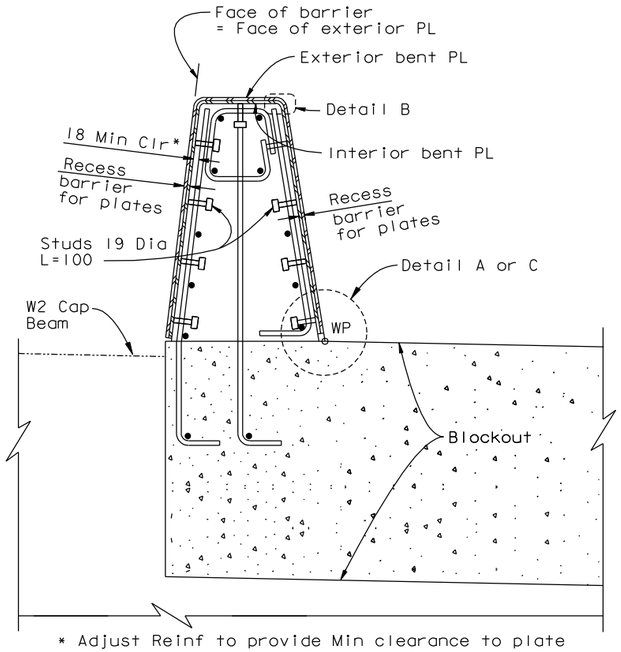

* Adjust Reinf to provide Min clearance to plate

SECTION A-A
1:10

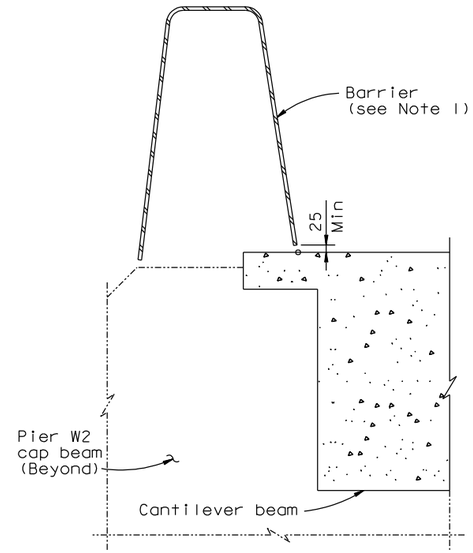

SECTION B-B
1:10

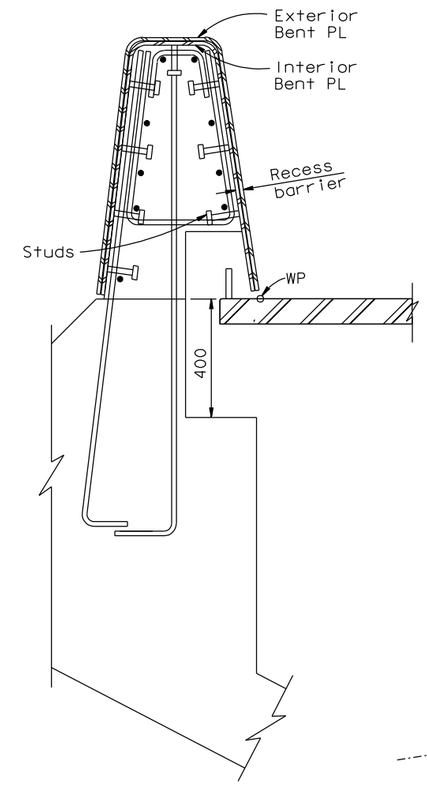

SECTION C-C
1:10

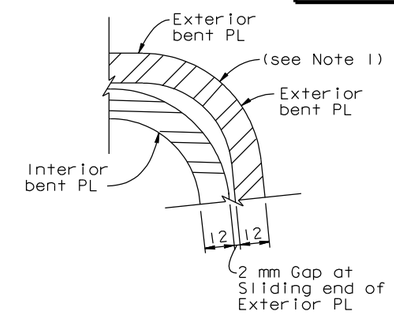

DETAIL B
NTS

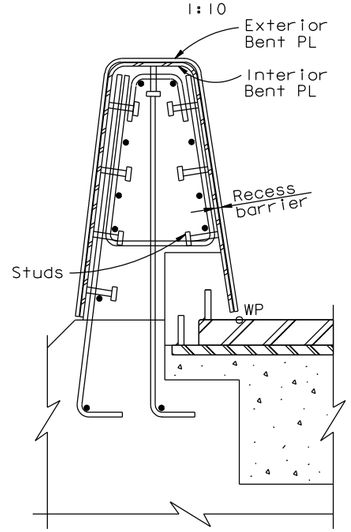

SECTION F-F
1:10

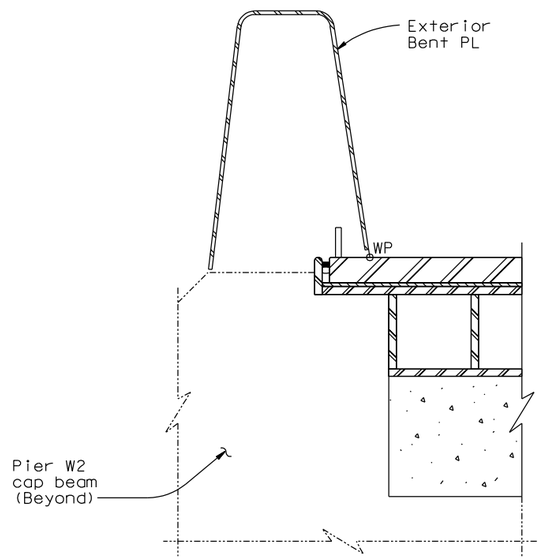

SECTION G-G
1:10

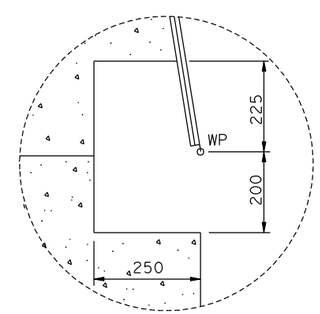

TYPICAL BARRIER
BLOCKOUT
NTS

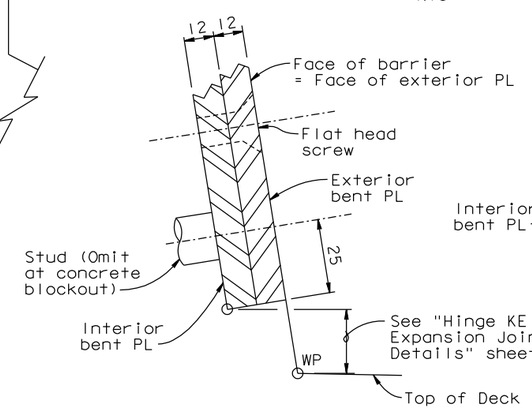

DETAIL TYPICAL AT FIXED END OF EXTERIOR PL
DETAIL A
NTS

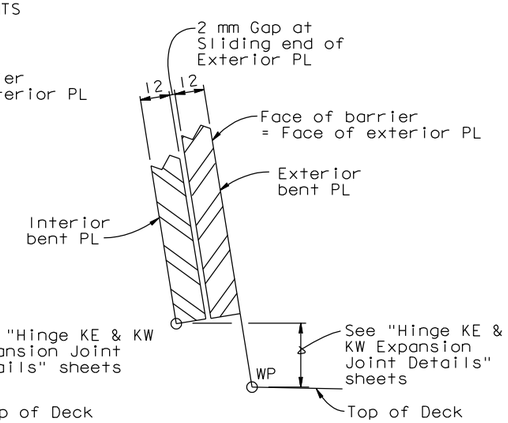

DETAIL TYPICAL AT SLIDING END OF EXTERIOR PL
DETAIL C
NTS

NOTES:

1. Bend steel plates to conform to shape of concrete barrier.
2. Galvanize all metal hardware after fabrication.
3. Steel barrier cover plates to be furnished by others and installed by Contractor.

SUPPLEMENTAL SHEET
CONTRACT CHANGE ORDER NO. 216
SHEET 33 OF 55

REQUESTS FOR INFORMATION NOT ADDRESSED IN THIS CCO REMAIN IN FORCE

ALL DIMENSIONS ARE IN MILLIMETERS UNLESS OTHERWISE SHOWN

DESIGN OVERSIGHT
ADE AKINSANYA
SIGN OFF DATE

MARK	DATE	DESCRIPTIONS	BY	CH'D	CCO#
0	01/20/12	YBI CLOSURE POUR	TL	JB	216

REVISIONS

	BY	CHECKED
DESIGN	Lee	Wang
DETAILS	van Ryn/Zucchi/Mai	Jain
QUANTITIES	Liao	E. Nichol

PREPARED FOR THE STATE OF CALIFORNIA DEPARTMENT OF TRANSPORTATION

J. Birdy
PROJECT ENGINEER

BRIDGE NO. 34-0006L/R
KILOMETER POST 12.8

SAN FRANCISCO OAKLAND BAY BRIDGE
EAST SPAN SEISMIC SAFETY PROJECT

YBI TRANSITION STRUCTURES - HINGE K

HINGE K CLOSURE DETAILS NO. 15

Rev. Date: 5-18-98

ORIGINAL SCALE IN MILLIMETERS FOR REDUCED PLANS 0 10 20 30 40 50 60 70 80 90 100

CU 04
EA 0120F1

DISREGARD PRINTS BEARING EARLIER REVISION DATES

REVISION DATES (PRELIMINARY STAGE ONLY)

SHEET K132A OF 209

FILE => I:\bb\04-012001\sas\contract plans and cco\cco\cco#216\dgn\ybits-n-hinged115.dgn

Jan 6, 2012

USERNAME => arivera DATE PLOTTED => 30 MAY 2012 TIME PLOTTED => 13:25:36