DIST.	COUNTY	ROUTE	KILOMETER POST TOTAL PROJECT	SHEET NO.	TOTAL SHEETS
04	SF	80/SAS	13.2/13.9	1166S15	1204
		80/YBITS	12.7/13.2	K677A	806

REGISTERED ENGINEER - CIVIL
01-20-12
PLANS APPROVAL DATE
REGISTERED PROFESSIONAL ENGINEER A.L. ELY No. 18880 Exp. 6-30-13 CIVIL STATE OF CALIFORNIA
The State of California or its officers or agents shall not be responsible for the accuracy or completeness of electronic copies of this plan sheet.

T.Y. LIN / MOFFATT & NICHOL
TWO HARRISON STREET
SAN FRANCISCO, CA 94105

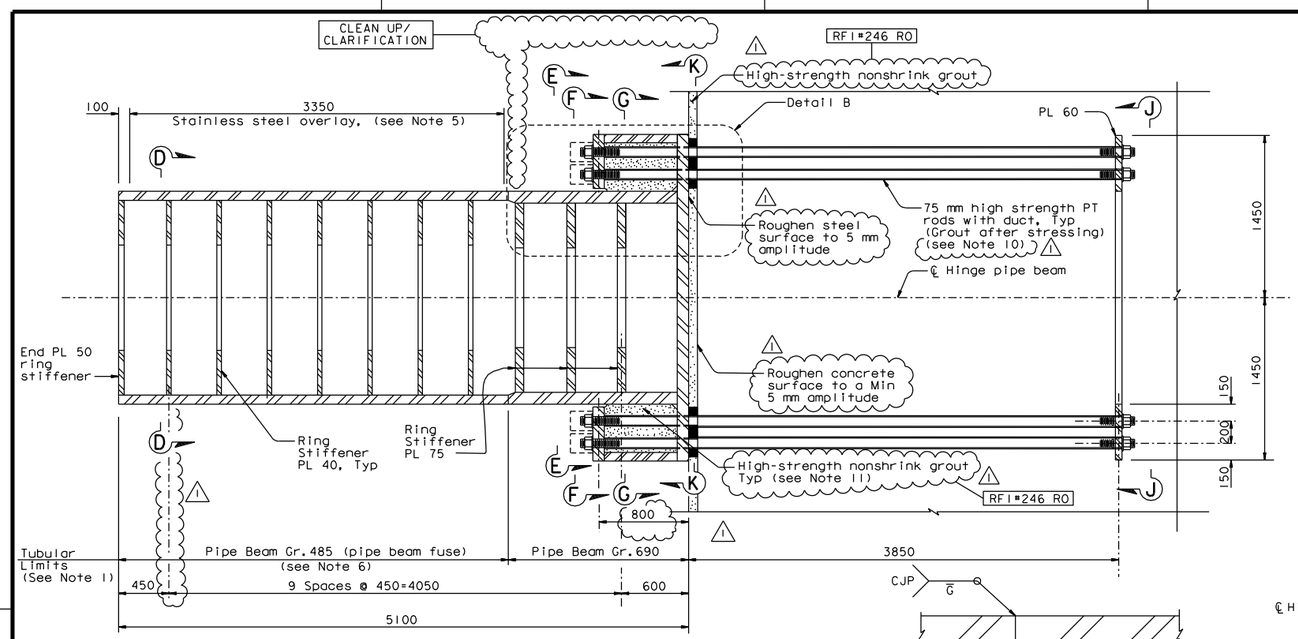

DETAIL A
1:20

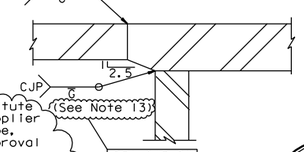

DETAIL C
1:5

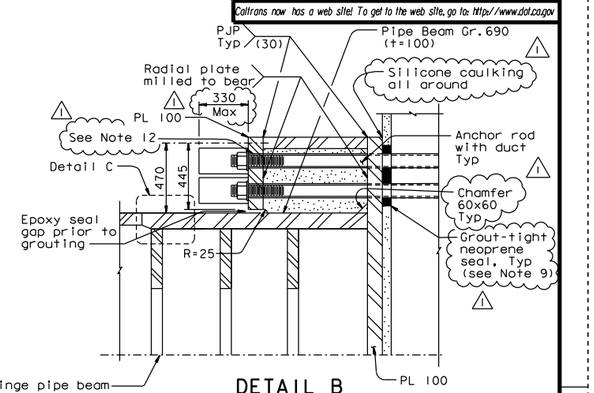

DETAIL B
1:15

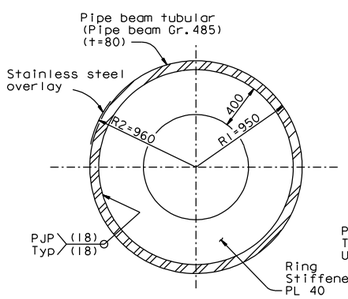

SECTION D-D
1:20

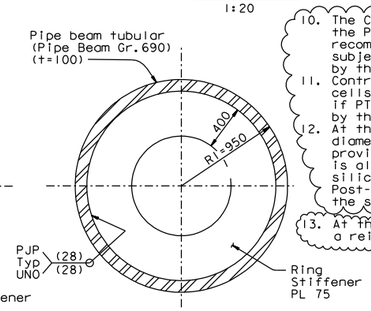

SECTION E-E
1:20

10. The Contractor may substitute the PT duct with a PT Supplier recommended debonding tape, subject to review and approval by the Engineer.
11. Contractor shall grout the interior cells of the pipe beam anchorage if PT duct substitution is approved by the Engineer.
12. At the Contractor's option, a 96 max diameter oversized hole may be used provided a 25 min thick plate washer is also used. Plate washer shall have silicone caulking around the perimeter. Post-tension cap shall be attached to the seal plate washer. RFI#246 RO
13. At the Contractor's option, it is acceptable to add a reinforcing fillet to this weld and grind it smooth. RFI#947 RO

MARK	DATE	DESCRIPTIONS	BY	CH'D	CCO#
1	01/31/07	HINGE K PIPE BEAM BLOCKOUTS	MN	NV	15

REVISIONS

CONTRACT CHANGE ORDER NO. ____
SHEET ___ OF ___

FOR REVISIONS ONLY

NOTES:

1. Pipe Beam tubulars shall be forgings. Hinge beam ring stiffener plate, stiffener plates and anchorage plates shall be pipe beam Gr. 485, UNO.
2. Hinge beam shall be SPCM.
3. For Section F-F through K-K, see "Hinge K Details No. 2" sheet.
4. Steel hinge beam PT anchor rods are 75 mm high strength PT rods (fu=1030 Mpa) with standard galvanized steel ducts, unless specified otherwise. For additional prestressing details, see "Prestressing Notes" sheet, and for general stressing sequence, see "Pier W2 Construction Sequence" sheet.
5. The areas noted as stainless steel overlay shall be 316L weld overlay. The area shall be machine finished to within 1 mm of the 960 theoretical radius with a surface finish of 0.8µm. The minimum final thickness of the stainless steel overlay shall be 5 mm.
6. Total of 4 spare beam fuses (including stiffeners) for hinges KW and KE shall be fabricated with a minimum overall length of 3513 mm. Spare pipe beams to replace the fuse sections in case of damage due to earthquake in the future (By Others). CLEAN UP/ CLARIFICATION RFI#300 RO
7. Jacking force in the steel hinge beam PT anchor rods (HB1-HB76) shall be 3000 kN typical. RFI#400 RO
8. Welds between interior ring stiffener plates and tubulars may be undermatched by one strength level.
9. Grout-tight neoprene seal shown is schematic. The seal shall prevent any grout from seeping through the PT rod holes in the base plate. Area around the hole perimeter shall be ground smooth to produce a tight seal.

ALL DIMENSIONS ARE IN MILLIMETERS UNLESS OTHERWISE SHOWN

5 REVISED PER ADDENDUM NO. 5 DATED DECEMBER 21, 2005

DIST.	COUNTY	ROUTE	KILOMETER POST TOTAL PROJECT	SHEET NO.	TOTAL SHEETS
04	SF	80	13.2/13.9	844RIC	1204

REGISTERED ENGINEER - CIVIL
12-6-04
PLANS APPROVAL DATE
REGISTERED PROFESSIONAL ENGINEER John Sun No. C 54648 Exp. 12/31/05 CIVIL STATE OF CALIFORNIA
The State of California or its officers or agents shall not be responsible for the accuracy or completeness of electronic copies of this plan sheet.

T.Y. LIN / MOFFATT & NICHOL
825 BATTERY STREET
SAN FRANCISCO, CA 94111

Caltrans now has a web site! To get to the web site, go to: http://www.dot.ca.gov

100% PS&E

R. Vallizadeh/V. Toan/Y.L./W.L./F.C.
DESIGN OVERSIGHT
SIGN OFF DATE 01/31/07
Rev. Date: 5-18-98

	BY	CHECKED
DESIGN	J. Sun	C. Redfield
DETAILS	J. Duxbury	M. Chen
QUANTITIES	J. Duxbury	S. Shi

PREPARED FOR THE STATE OF CALIFORNIA DEPARTMENT OF TRANSPORTATION

R. Manzanarez
PROJECT ENGINEER

BRIDGE NO. 34-0006L/R
KILOMETER POST 13.2/13.9

SAN FRANCISCO OAKLAND BAY BRIDGE
EAST SPAN SEISMIC SAFETY PROJECT
SELF-ANCHORED SUSPENSION BRIDGE (SUPERSTRUCTURE & TOWER)
HINGE K DETAILS NO. 1

ORIGINAL SCALE IN MILLIMETERS FOR REDUCED PLANS 0 10 20 30 40 50 60 70 80 90 100
CU 04
EA 0120F1
DISREGARD PRINTS BEARING EARLIER REVISION DATES
REVISION DATES (PRELIMINARY STAGE ONLY) 05/20/05 05/20/05 05/20/05 07/20/06 12/20/06 12/01/05
SHEET 427RIC OF

SUPPLEMENTAL SHEET
CONTRACT CHANGE ORDER NO. 216
SHEET 29 OF 55

REQUESTS FOR INFORMATION NOT ADDRESSED IN THIS CCO REMAIN IN FORCE

DESIGN OVERSIGHT
ADE AKINSANYA
SIGN OFF DATE
Rev. Date: 5-18-98

MARK	DATE	DESCRIPTIONS	BY	CH'D	CCO#
0	01/20/12	YBI CLOSURE POUR	TL	JB	216

REVISIONS

	BY	CHECKED
DESIGN	NA	NA
DETAILS	van Ryn/Zucchi/Mai	Jain
QUANTITIES	Liao	E. Nichol

PREPARED FOR THE STATE OF CALIFORNIA DEPARTMENT OF TRANSPORTATION

Jal Birdy
PROJECT ENGINEER

BRIDGE NO. 34-0006 L/R
KILOMETER POST 12.8

SAN FRANCISCO OAKLAND BAY BRIDGE
EAST SPAN SEISMIC SAFETY PROJECT
YBI TRANSITION STRUCTURES - HINGE K
HINGE K CLOSURE DETAILS NO. 11

ORIGINAL SCALE IN MILLIMETERS FOR REDUCED PLANS 0 10 20 30 40 50 60 70 80 90 100
CU 04
EA 0120F1
DISREGARD PRINTS BEARING EARLIER REVISION DATES
REVISION DATES (PRELIMINARY STAGE ONLY)
SHEET K128A OF 209

FILE => I:\bb\04-0120I\sas\contract plans and cco\cco\cco#216\dgn\ybits-n-hingedtll.dgn

Jan 6, 2012
USERNAME => arivera DATE PLOTTED => 30 MAY 2012 TIME PLOTTED => 13:22:20