DIST.	COUNTY	ROUTE	KILOMETER POST TOTAL PROJECT	SHEET NO.	TOTAL SHEETS
04	SF	80/SAS	13.2/13.9	1166S14	1204
		80/YBITS	12.7/13.2	K676A	806

REGISTERED ENGINEER - CIVIL

01-20-12

PLANS APPROVAL DATE

REGISTERED PROFESSIONAL ENGINEER A.L. ELY No. 18880 Exp. 6-30-13 CIVIL STATE OF CALIFORNIA

The State of California or its officers or agents shall not be responsible for the accuracy or completeness of electronic copies of this plan sheet.

T.Y. LIN / MOFFATT & NICHOL
TWO HARRISON STREET
SAN FRANCISCO, CA 94105

NOTES:

1. The drawing provided hereon is reproduced from the contract plans of the adjacent Self-Anchored Suspension Bridge contract.

DIST.	COUNTY	ROUTE	KILOMETER POST TOTAL PROJECT	SHEET NO.	TOTAL SHEETS
04	SF	80	13.2/13.9	848	1204

REGISTERED ENGINEER - CIVIL

12-6-04

PLANS APPROVAL DATE

REGISTERED PROFESSIONAL ENGINEER Marwan N. Nader No. C 054426 Exp. 12/31/05 CIVIL STATE OF CALIFORNIA

The State of California or its officers or agents shall not be responsible for the accuracy or completeness of electronic copies of this plan sheet.

T.Y. LIN / MOFFATT & NICHOL
825 BATTERY STREET
SAN FRANCISCO, CA 94111

Caltrans now has a web site! To get to the web site, go to: http://www.dot.ca.gov

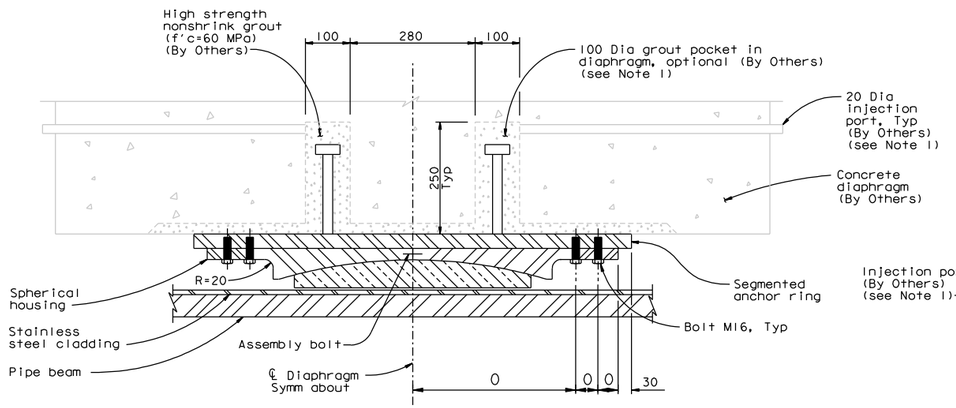

DETAIL A
1:5

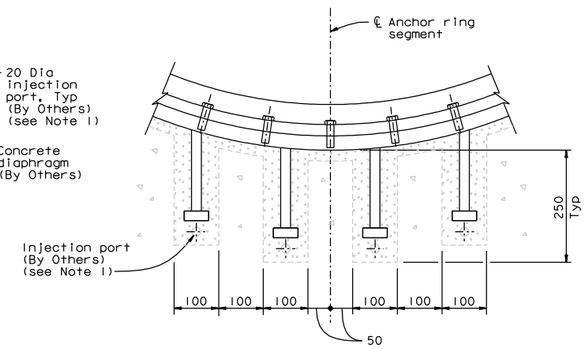

DETAIL B
1:5

GROUTED POCKET ALTERNATIVE FOR PLACEMENT OF BEARING

HINGE K BEARING DESIGN VALUES

Hinge	Support Type	Design Load (KN per pipe beam)		Design Rotation (radians)		Uplift-inside bearing gap (mm)	Longitudinal Movement (mm)	
		Service	Ultimate	Service	Ultimate		Service	Ultimate
KW, KE	Sliding	10100	56250	0.001	0.0130	250	134	1000 (closing) 1300 (opening)

* Design value for shear given corresponds to maximum shear capacity of fuse pipe beam. It can occur in any direction.

NOTES:

1. Grouted pockets with injection ports are an acceptable alternative to insure that the bearings are aligned and installed within the specified tolerances (by Others).

100 % PS&E

ALL DIMENSIONS ARE IN MILLIMETERS UNLESS OTHERWISE SHOWN

R. Valizadeh/V. Toan/Y.L./W.L./F.C.
DESIGN OVERSIGHT
SIGN OFF DATE 12/18/02

Rev. Date: 5-18-98

	BY	CHECKED
DESIGN	M. Nader	J. Krizek
DETAILS	C. Mibelli	N. Vo
QUANTITIES	C. Mibelli	N. Vo

PREPARED FOR THE STATE OF CALIFORNIA DEPARTMENT OF TRANSPORTATION

R. Manzanarez
PROJECT ENGINEER

BRIDGE NO. 34-0006L/R
KILOMETER POST 13.2/13.9

SAN FRANCISCO OAKLAND BAY BRIDGE
EAST SPAN SEISMIC SAFETY PROJECT
SELF-ANCHORED SUSPENSION BRIDGE
(SUPERSTRUCTURE & TOWER)

HINGE K BEARING DETAILS NO. 3

ORIGINAL SCALE IN MILLIMETERS FOR REDUCED PLANS 0 10 20 30 40 50 60 70 80 90 100

CU 04
EA 0120F1

DISREGARD PRINTS BEARING EARLIER REVISION DATES 04/09/02 07/19/02 12/18/02

SHEET 431 OF

SUPPLEMENTAL SHEET

CONTRACT CHANGE ORDER NO. 216
SHEET 28 OF 55

REQUESTS FOR INFORMATION NOT ADDRESSED IN THIS CCO REMAIN IN FORCE

DESIGN OVERSIGHT
ADE AKINSANYA
SIGN OFF DATE

MARK	DATE	DESCRIPTIONS	BY	CH'D	CCO#
0	01/20/12	YBI CLOSURE POUR	TL	JB	216

REVISIONS

Rev. Date: 5-18-98

	BY	CHECKED
DESIGN	NA	NA
DETAILS	van Ryn/Zucchi/Mai	Jain
QUANTITIES	Liao	E. Nichol

PREPARED FOR THE STATE OF CALIFORNIA DEPARTMENT OF TRANSPORTATION

Jal Birdy
PROJECT ENGINEER

BRIDGE NO. 34-0006 L/R
KILOMETER POST 12.8

SAN FRANCISCO OAKLAND BAY BRIDGE
EAST SPAN SEISMIC SAFETY PROJECT

YBI TRANSITION STRUCTURES - HINGE K

HINGE K CLOSURE DETAILS NO. 10

ORIGINAL SCALE IN MILLIMETERS FOR REDUCED PLANS 0 10 20 30 40 50 60 70 80 90 100

CU 04
EA 0120F1

DISREGARD PRINTS BEARING EARLIER REVISION DATES

SHEET K127A OF 209

FILE => I:\bb\04-012001\sas\contract plans and cco\cco\cco#216\dgn\ybits-n-hingedt10.dgn

Dec 69, 20021

USERNAME => arivera DATE PLOTTED => 30 MAY 2012 TIME PLOTTED => 13:21:44