| DIST. | COUNTY | ROUTE | KILOMETER POST TOTAL PROJECT | SHEET NO. | TOTAL SHEETS |
|---|---|---|---|---|---|
| 04 | SF | 80/SAS | 13.2/13.9 | 1166S13 | 1204 |
| | | 80/YBITS | 12.7/13.2 | K675A | 806 |

REGISTERED ENGINEER - CIVIL

01-20-12

PLANS APPROVAL DATE

REGISTERED PROFESSIONAL ENGINEER A.L. ELY No. 18880 Exp. 6-30-13 CIVIL STATE OF CALIFORNIA

The State of California or its officers or agents shall not be responsible for the accuracy or completeness of electronic copies of this plan sheet.

T.Y. LIN / MOFFATT & NICHOL
TWO HARRISON STREET
SAN FRANCISCO, CA 94105

| DIST. | COUNTY | ROUTE | KILOMETER POST TOTAL PROJECT | SHEET NO. | TOTAL SHEETS |
|---|---|---|---|---|---|
| 04 | SF | 80 | 13.2/13.9 | 847C | 1204 |

REGISTERED ENGINEER - CIVIL

12-6-04

PLANS APPROVAL DATE

REGISTERED PROFESSIONAL ENGINEER Marwan N. Nader No. C 054426 Exp. 12/31/05 CIVIL STATE OF CALIFORNIA

The State of California or its officers or agents shall not be responsible for the accuracy or completeness of electronic copies of this plan sheet.

T.Y. LIN / MOFFATT & NICHOL
825 BATTERY STREET
SAN FRANCISCO, CA 94111

Caltrans now has a web site! To get to the web site, go to: http://www.dot.ca.gov

5

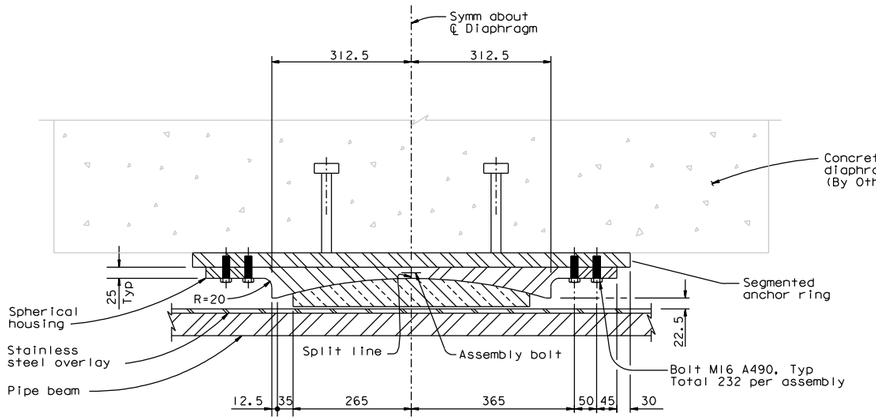


DETAIL A
1:5

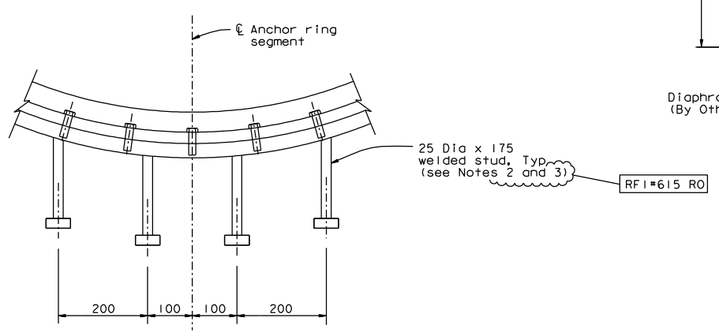


DETAIL B
1:5

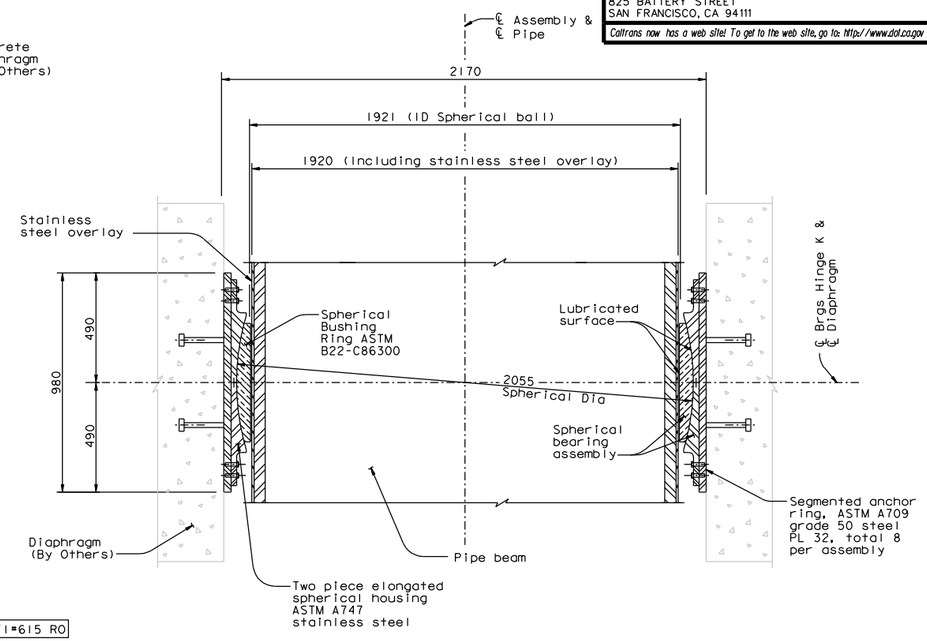


SECTION S-S
1:10
(see Note 1)

NOTES:

1. For other details, see Section R-R in "Hinge K Bearing Details No.1" sheet.
2. At the Contractor's option, welded studs may be installed radially.
3. At the Contractor's option, longer studs up to 210 mm may be used.

RFI#615 R0

100 % PS&E

5 REVISED PER ADDENDUM NO. 5 DATED DECEMBER 21, 2005

ALL DIMENSIONS ARE IN MILLIMETERS UNLESS OTHERWISE SHOWN

R. Valizadeh/V. Toan/Y.L./W.L./F.C.
DESIGN OVERSIGHT
SIGN OFF DATE 12/07/05

| | BY | CHECKED |
|---|---|---|
| DESIGN | M. Nader | J. Krizek |
| DETAILS | C. Mibelli | N. Vo |
| QUANTITIES | C. Mibelli | N. Vo |

PREPARED FOR THE STATE OF CALIFORNIA DEPARTMENT OF TRANSPORTATION

R. Manzanarez
PROJECT ENGINEER

BRIDGE NO. 34-0006L/R
KILOMETER POST 13.2/13.9

SAN FRANCISCO OAKLAND BAY BRIDGE
EAST SPAN SEISMIC SAFETY PROJECT
SELF-ANCHORED SUSPENSION BRIDGE
(SUPERSTRUCTURE & TOWER)
HINGE K BEARING DETAILS NO. 2

Rev. Date: 5-18-98

ORIGINAL SCALE IN MILLIMETERS FOR REDUCED PLANS 0 10 20 30 40 50 60 70 80 90 100

CU 04
EA 0120F1

DISREGARD PRINTS BEARING EARLIER REVISION DATES 04/08/02 07/09/02 12/06/02 12/07/05

REVISION DATES (PRELIMINARY STAGE ONLY)

SHEET 430C OF

NOTES:

1. The drawing provided hereon is reproduced from the contract plans of the adjacent Self-Anchored Suspension Bridge contract.

SUPPLEMENTAL SHEET

CONTRACT CHANGE ORDER NO. 216
SHEET 27 OF 55

REQUESTS FOR INFORMATION NOT ADDRESSED IN THIS CCO REMAIN IN FORCE

DESIGN OVERSIGHT
ADE AKINSANYA
SIGN OFF DATE

| MARK | DATE | DESCRIPTIONS | BY | CH'D | CCO# |
|---|---|---|---|---|---|
| 0 | 01/20/12 | YBI CLOSURE POUR | TL | JB | 216 |

REVISIONS

| | BY | CHECKED |
|---|---|---|
| DESIGN | NA | NA |
| DETAILS | van Ryn/Zucchi/Mai | Jain |
| QUANTITIES | Liao | E. Nichol |

PREPARED FOR THE STATE OF CALIFORNIA DEPARTMENT OF TRANSPORTATION

Jal Birdy
PROJECT ENGINEER

BRIDGE NO. 34-0006 L/R
KILOMETER POST 12.8

SAN FRANCISCO OAKLAND BAY BRIDGE
EAST SPAN SEISMIC SAFETY PROJECT
YBI TRANSITION STRUCTURES - HINGE K
HINGE K CLOSURE DETAILS NO. 9

Rev. Date: 5-18-98

ORIGINAL SCALE IN MILLIMETERS FOR REDUCED PLANS 0 10 20 30 40 50 60 70 80 90 100

CU 04
EA 0120F1

DISREGARD PRINTS BEARING EARLIER REVISION DATES

REVISION DATES (PRELIMINARY STAGE ONLY)

SHEET K126A OF 209

FILE => I:\bb\04-012001\sas\contract plans and cco\cco\cco#216\dgn\ybits-n-hingedt09.dgn

Jan 6, 2012

USERNAME => arivera DATE PLOTTED => 30 MAY 2012 TIME PLOTTED => 13:21:05