DIST.	COUNTY	ROUTE	KILOMETER POST TOTAL PROJECT	SHEET NO.	TOTAL SHEETS
04	SF	80/SAS	13.2/13.9	1166S08	1204
		80/YBITS	12.7/13.2	K671A	806

Caltrans Metric

REGISTERED ENGINEER - CIVIL

01-20-12

PLANS APPROVAL DATE

REGISTERED PROFESSIONAL ENGINEER A.L. ELY No. 18880 Exp. 6-30-13 CIVIL STATE OF CALIFORNIA

The State of California or its officers or agents shall not be responsible for the accuracy or completeness of electronic copies of this plan sheet.

T.Y. LIN / MOFFATT & NICHOL
TWO HARRISON STREET
SAN FRANCISCO, CA 94105

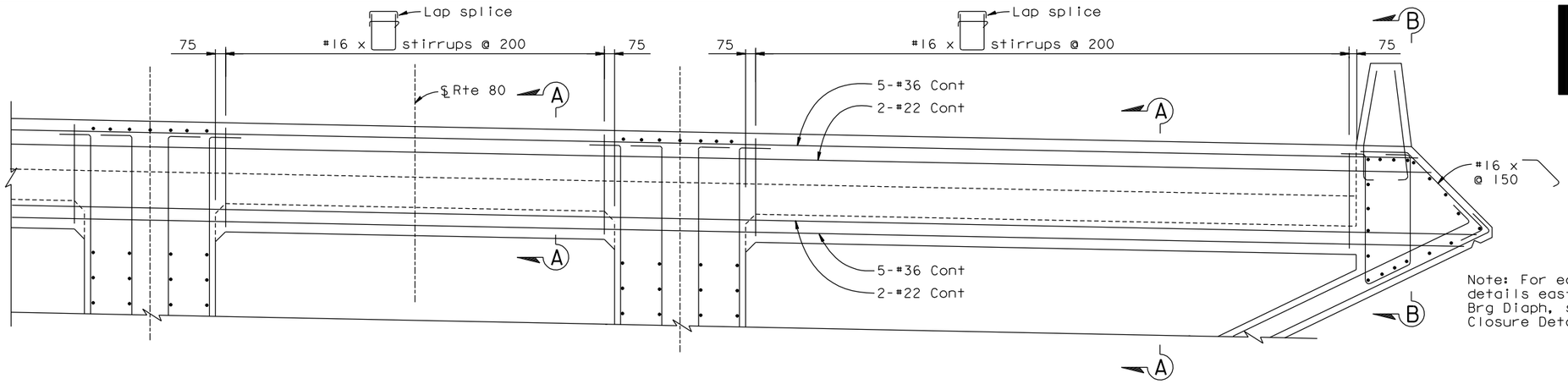

Note: For edge of deck details east of Hinge K Brg Diaph, see "Hinge K Closure Details No.7" sheet.

PARTIAL ELEVATION EDGE BEAM ADJACENT TO EXPANSION JOINT ASSEMBLY BLOCKOUT

1:25

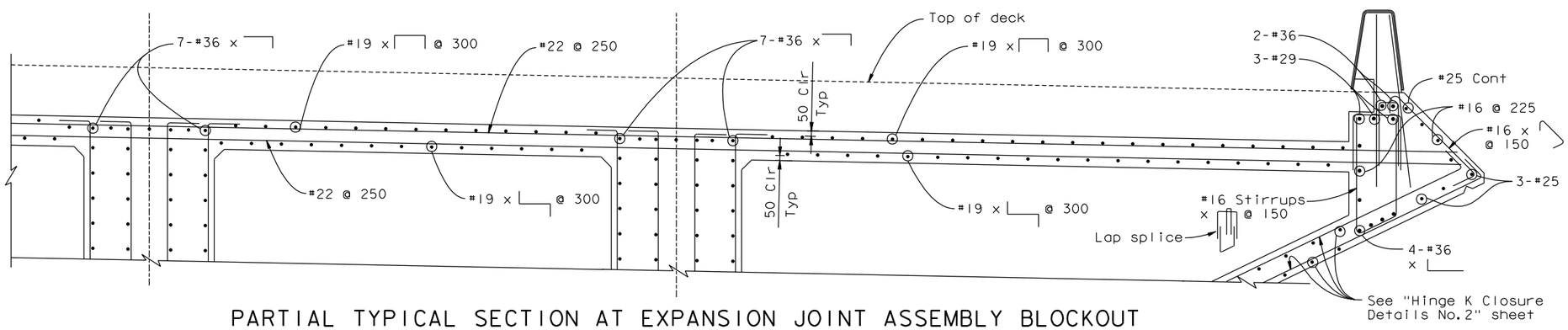

Note: For reinf at blockout for deck exp joint assembly, see "Hinge KE & KW Expansion Joint Details" sheet.

PARTIAL TYPICAL SECTION AT EXPANSION JOINT ASSEMBLY BLOCKOUT

1:25

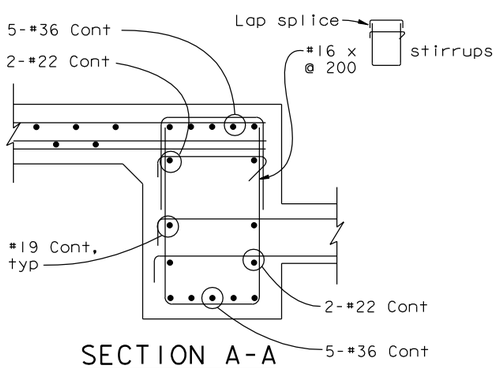

SECTION A-A

1:15

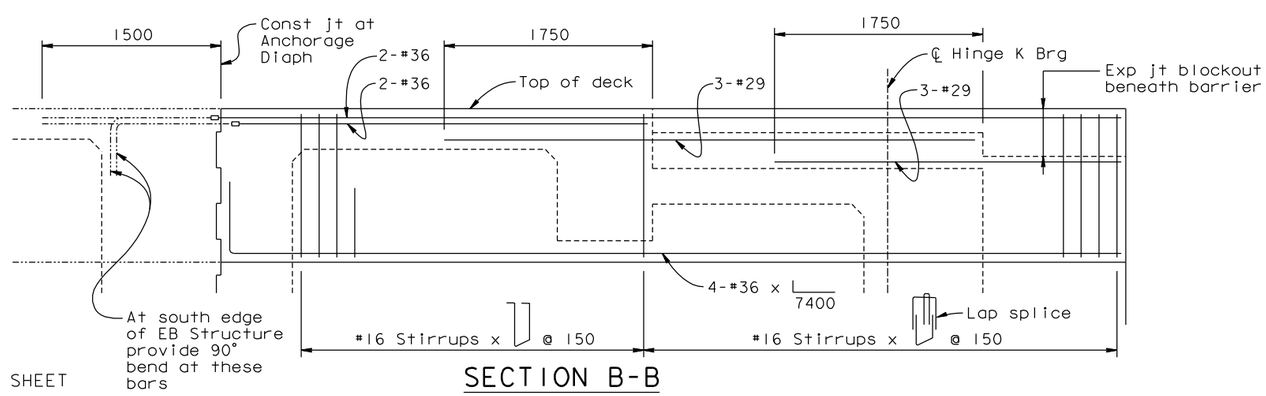

SECTION B-B

1:25

SUPPLEMENTAL SHEET

CONTRACT CHANGE ORDER NO. 216
SHEET 22 OF 55

REQUESTS FOR INFORMATION NOT ADDRESSED IN THIS CCO REMAIN IN FORCE

ALL DIMENSIONS ARE IN MILLIMETERS UNLESS OTHERWISE SHOWN

DESIGN OVERSIGHT
ADE AKINSANYA
SIGN OFF DATE

MARK	DATE	DESCRIPTIONS	BY	CH'D	CCO#
0	01/20/12	YBI CLOSURE POUR	TL	JB	216

REVISIONS

DESIGN	BY Lee	CHECKED Wong
DETAILS	BY van Ryn/Zucchi/Mai	CHECKED Jain
QUANTITIES	BY Liao	CHECKED E. Nichol

PREPARED FOR THE STATE OF CALIFORNIA DEPARTMENT OF TRANSPORTATION

Jal Birdy
PROJECT ENGINEER

BRIDGE NO. 34-0006 L/R
KILOMETER POST 12.8

SAN FRANCISCO OAKLAND BAY BRIDGE
EAST SPAN SEISMIC SAFETY PROJECT

YBI TRANSITION STRUCTURES - HINGE K

HINGE K CLOSURE DETAILS NO.5

Rev. Date: 5-18-98

ORIGINAL SCALE IN MILLIMETERS FOR REDUCED PLANS 0 10 20 30 40 50 60 70 80 90 100

CU 04
EA 0120F1

DISREGARD PRINTS BEARING EARLIER REVISION DATES

REVISION DATES (PRELIMINARY STAGE ONLY)

SHEET K122A OF 209

FILE => I:\bb\04-0120F1\sas\contract plans and cco\cco\cco#216\dgn\ybits-n-hinged105.dgn

Jan 6, 2012

USERNAME => arivera DATE PLOTTED => 30 MAY 2012 TIME PLOTTED => 13:18:27