Notes:
- Hinge K closure pour not to be placed until a min of 75 days after prestressing adjacent frame.
- At EB structure, bike path counterweight shall be placed prior to placement of Hinge K closure pour.
- Prior to placement of Hinge K closure concrete, counterweights shall be placed at the cantilever ends of the adjacent frames to balance a portion of the dead load reaction of the closure concrete (approx 13 300 KN). Center of gravity of counterweight to be located at station line for WB Structure and 625 mm south of station line for EB Structure. Counterweights to be removed after closure concrete has attained required strength and prior to falsework release.
- Concrete ballast within Hinge K closure shall be placed after Hinge K bearing assembly is grouted in final position.

SUPPLEMENTAL SHEET
CONTRACT CHANGE ORDER NO. 216
SHEET 18 OF 55

REQUESTS FOR INFORMATION NOT ADDRESSED IN THIS CCO REMAIN IN FORCE

Caltrans Metric

DIST.	COUNTY	ROUTE	KILOMETER POST TOTAL PROJECT	SHEET NO.	TOTAL SHEETS
04	SF	80/SAS	13.2/13.9	1166S04	1204
		80/YBITS	12.7/13.2	K667A	806

REGISTERED ENGINEER - CIVIL
01-20-12
PLANS APPROVAL DATE
The State of California or its officers or agents shall not be responsible for the accuracy or completeness of electronic copies of this plan sheet.

REGISTERED PROFESSIONAL ENGINEER A.L. ELY No. 18880 Exp. 6-30-13 CIVIL STATE OF CALIFORNIA

T.Y. LIN / MOFFATT & NICHOL
TWO HARRISON STREET
SAN FRANCISCO, CA 94105

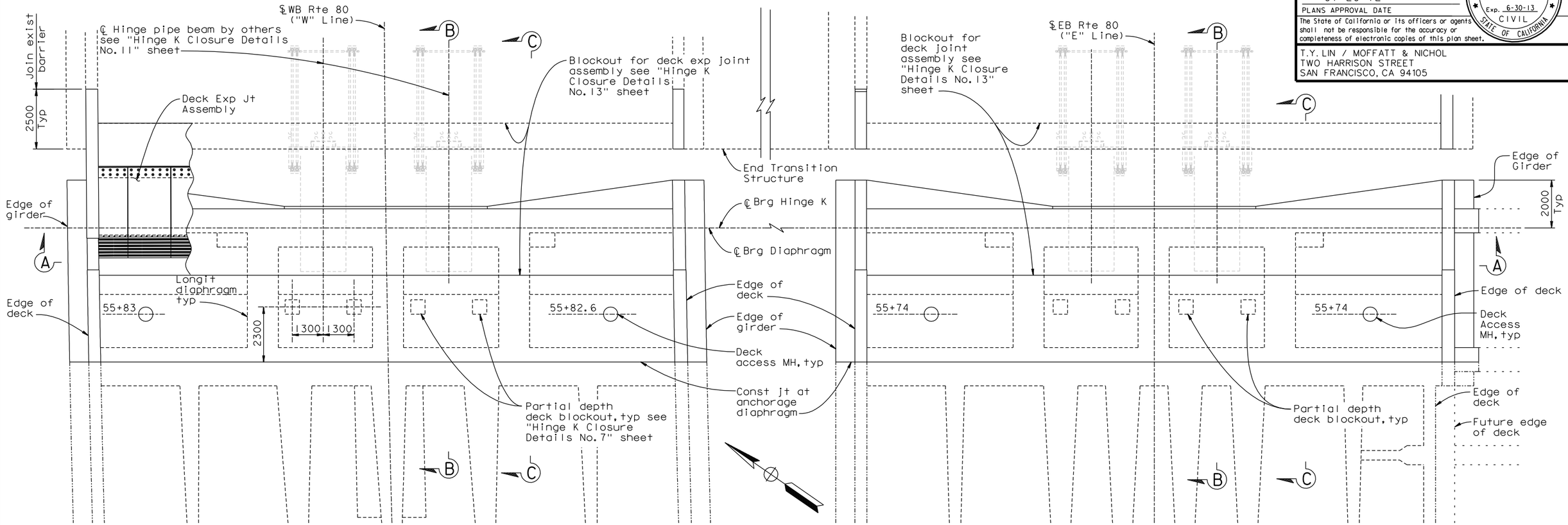

PLAN
1:80

Note: For Sections B-B & C-C see "Hinge K Closure Details No. 2" sheet.

** Indicates dimension measured at ℄ Brg Hinge K

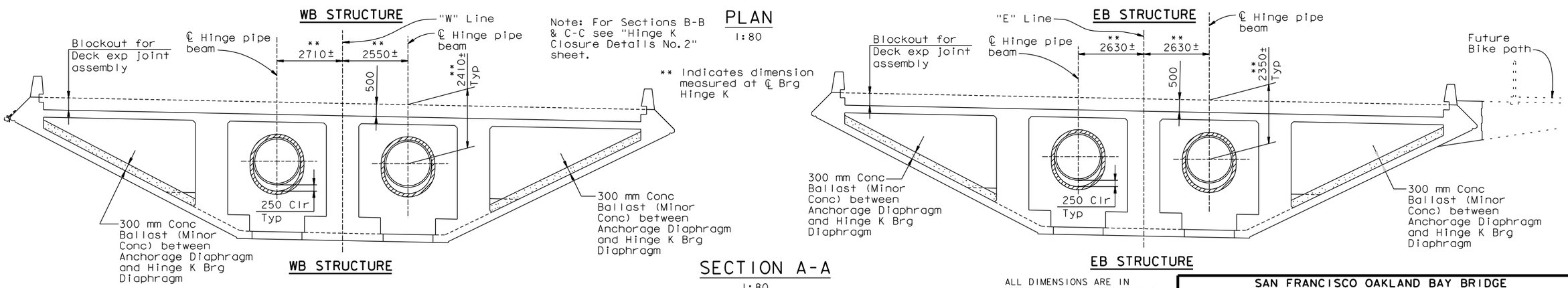

SECTION A-A
1:80

ALL DIMENSIONS ARE IN MILLIMETERS UNLESS OTHERWISE SHOWN

MARK	DATE	DESCRIPTIONS	BY	CH'D	CCO#
0	01/20/12	YBI CLOSURE POUR	TL	JB	216

REVISIONS

DESIGN OVERSIGHT: ADE AKINSANYA
SIGN OFF DATE

	BY	CHECKED
DESIGN	Lee	Atiqullah
DETAILS	van Ryn/Zucchi/Mai	Jain
QUANTITIES	Liao	E. Nichol

PREPARED FOR THE STATE OF CALIFORNIA DEPARTMENT OF TRANSPORTATION

Jal Birdy
PROJECT ENGINEER

BRIDGE NO. 34-0006 L/R
KILOMETER POST 12.8

SAN FRANCISCO OAKLAND BAY BRIDGE
EAST SPAN SEISMIC SAFETY PROJECT

YBI TRANSITION STRUCTURES - HINGE K

HINGE K CLOSURE DETAILS NO. 1

Rev. Date: 5-18-98

ORIGINAL SCALE IN MILLIMETERS FOR REDUCED PLANS 0 10 20 30 40 50 60 70 80 90 100

CU 04
EA 0120F1

DISREGARD PRINTS BEARING EARLIER REVISION DATES

REVISION DATES (PRELIMINARY STAGE ONLY)

SHEET K118A OF 209

FILE => I:\bb\04-0120F1\sas\contract plans and cco\cco\cco#216\dgn\ybits-n-hinged101.dgn

Jan 6, 2012

USERNAME => arivera DATE PLOTTED => 30 MAY 2012 TIME PLOTTED => 13:15:57