DIST.	COUNTY	ROUTE	KILOMETER POST TOTAL PROJECT	SHEET NO.	TOTAL SHEETS
04	SF	80	13.2/13.9	825R5	1204

Caltrans Metric

REGISTERED ENGINEER - CIVIL

12-6-04
PLANS APPROVAL DATE

The State of California or its officers or agents shall not be responsible for the accuracy or completeness of electronic copies of this plan sheet.

REGISTERED PROFESSIONAL ENGINEER Tien Hung Ho No. C 43990 Exp. 6/30/13 CIVIL STATE OF CALIFORNIA

T.Y. LIN / MOFFATT & NICHOL
825 BATTERY STREET
SAN FRANCISCO, CA 94111

Caltrans now has a web site! To get to the web site, go to: http://www.dot.ca.gov

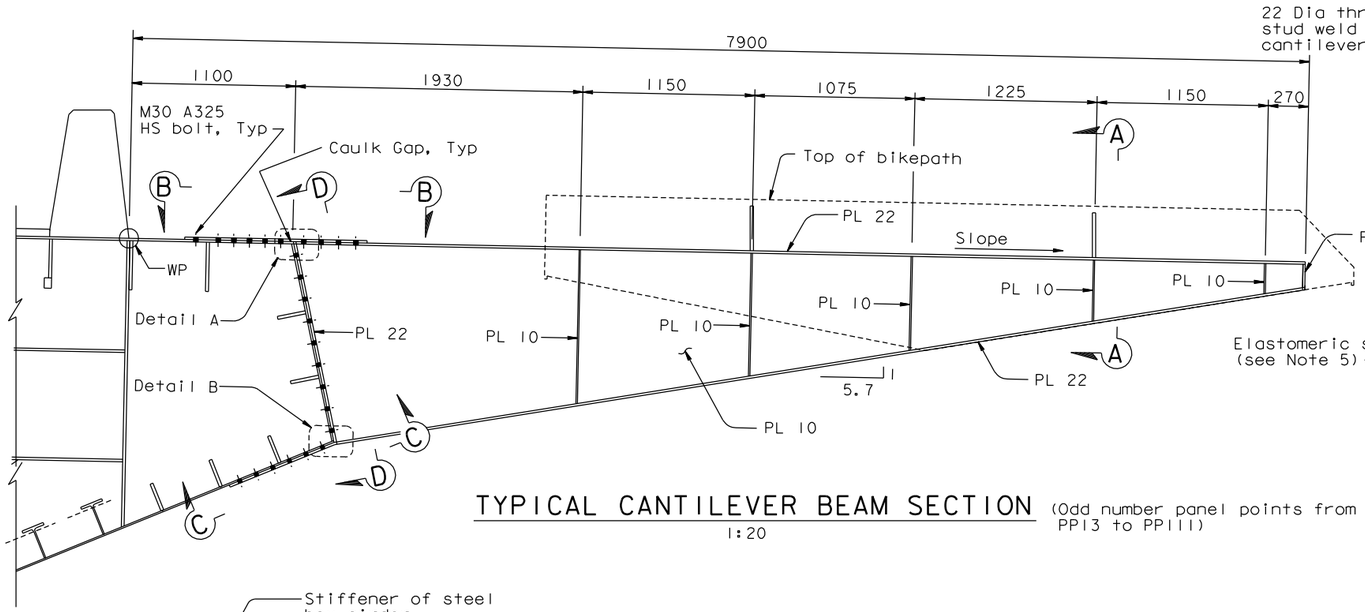

TYPICAL CANTILEVER BEAM SECTION (Odd number panel points from PP13 to PP111)
1:20

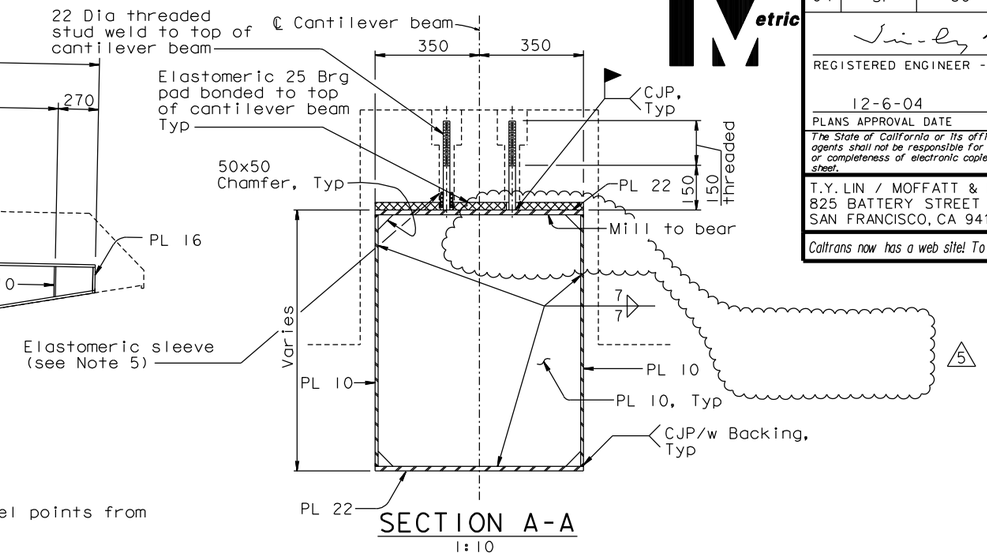

SECTION A-A
1:10

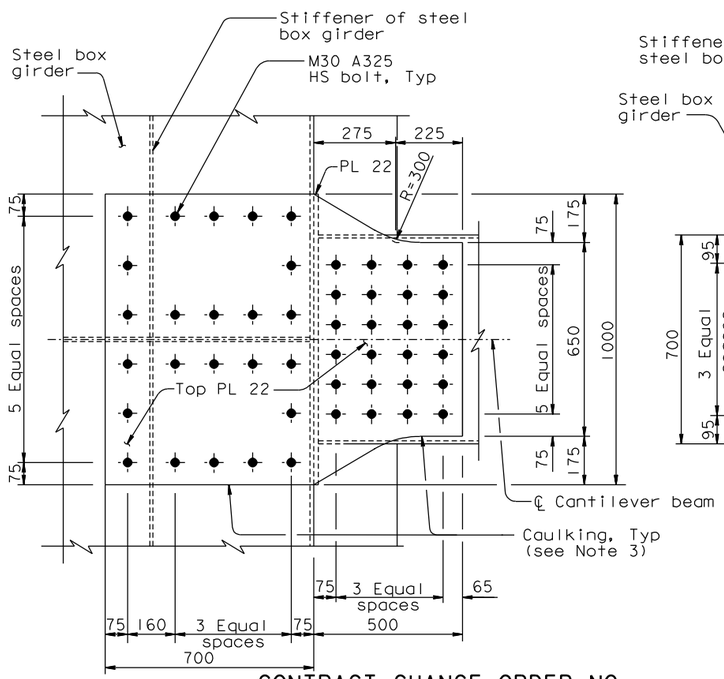

SECTION B-B
1:10

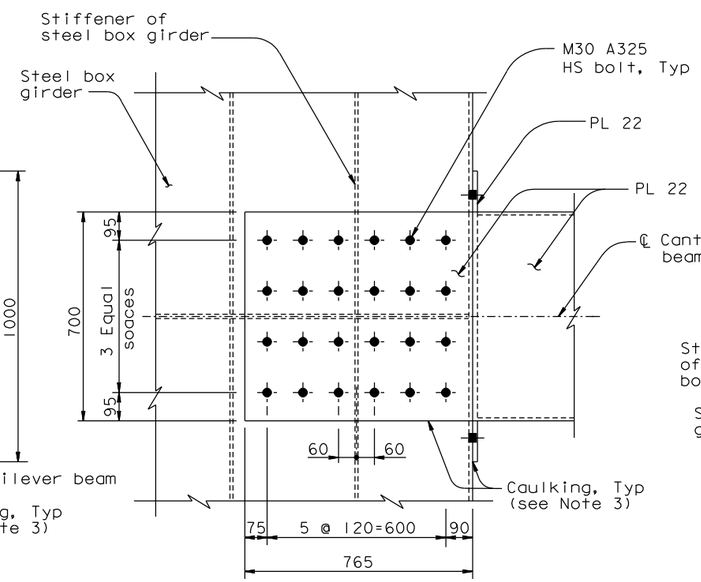

SECTION C-C
1:10

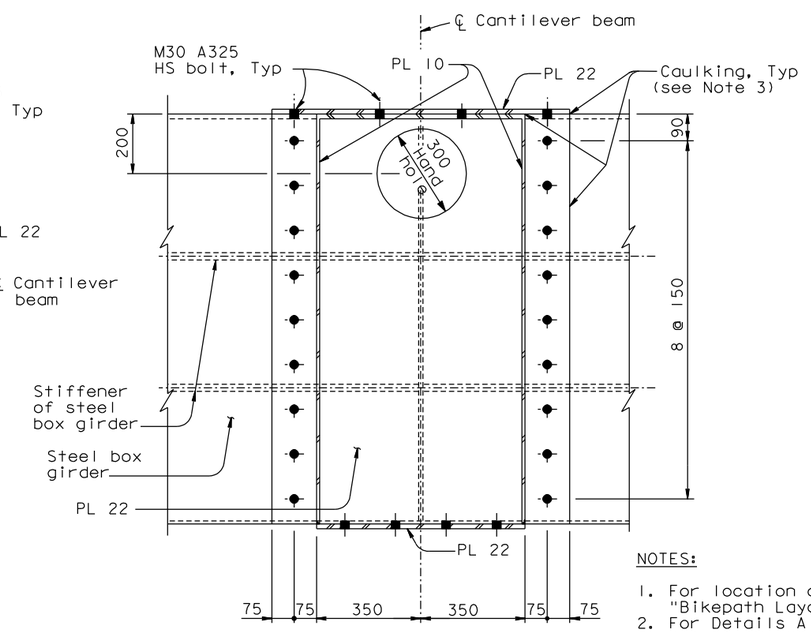

SECTION D-D
1:10

NOTES:

1. For location of typical cantilever beam, see "Bikepath Layout" sheets.
2. For Details A and B, see "Suspender Bracket Details No.2" sheet.
3. Caulking shall be provided along all edges of bolted connection between bikepath cantilever beam and box girder.
4. Note deleted. (5)
5. For elastomeric sleeve detail, see "Bikepath Details No.4A" sheet.

CONTRACT CHANGE ORDER NO. ____
SHEET ____ OF ____

REQUESTS FOR INFORMATION NOT ADDRESSED IN THIS CCO REMAIN IN FORCE

MARK	DATE	DESCRIPTIONS	BY	CH'D	CCO#
5	08/10/11	BIKEPATH PAD REVISIONS	GB	TH	211
4	01/25/11	BIKEPATH STUD ISSUE	CC	TH	186
3	08/20/10	BIKEPATH DETAILS	TH	CC	99
2	07/07/08	CAULKING	AS	TH	66
1	07/20/07	BIKEPATH BRACKETS	GB	TH	33

REVISIONS

R. Valizadeh/V. Toan/Y.L./W.L./F.C.
DESIGN OVERSIGHT
SIGN OFF DATE 08/10/11

Rev. Date: 5-18-98

DESIGN	BY T. Ho	CHECKED T. McMeans	
DETAILS	BY R. Xu	CHECKED P. Ritchie	
QUANTITIES	BY C. Bernardo	CHECKED S. Shi	

PREPARED FOR THE STATE OF CALIFORNIA DEPARTMENT OF TRANSPORTATION

ALL DIMENSIONS ARE IN MILLIMETERS UNLESS OTHERWISE SHOWN

R. Manzanarez
PROJECT ENGINEER

BRIDGE NO. 34-0006L/R
KILOMETER POST 13.2/13.9

SAN FRANCISCO OAKLAND BAY BRIDGE
EAST SPAN SEISMIC SAFETY PROJECT
SELF-ANCHORED SUSPENSION BRIDGE
(SUPERSTRUCTURE & TOWER)

BIKEPATH DETAILS NO. 1

ORIGINAL SCALE IN MILLIMETERS FOR REDUCED PLANS 0 10 20 30 40 50 60 70 80 90 100

CU 04
EA 0120F1

DISREGARD PRINTS BEARING EARLIER REVISION DATES

REVISION DATES (PRELIMINARY STAGE ONLY) 05/18/99 08/02/99 05/31/01 04/08/02 07/01/02 12/18/02 11/13/05

SHEET 408R5 OF

FILE => I:\bb\04-012001\sas\contract plans and cco\cco\cco*211\1-original 08-10-11\dgn\agbwd01.dgn

USERNAME => DWinrow DATE PLOTTED => 10 AUG 2011 TIME PLOTTED => 11:00:31

100 % PS&E

DIST.	COUNTY	ROUTE	KILOMETER POST TOTAL PROJECT	SHEET NO.	TOTAL SHEETS
04	SF	80	13.2/13.9	828R4	1204

Caltrans Metric

REGISTERED ENGINEER - CIVIL

12-6-04
PLANS APPROVAL DATE

REGISTERED PROFESSIONAL ENGINEER — Tien Hung Ho — No. C 43990 — Exp. 6/30/13 — CIVIL — STATE OF CALIFORNIA

The State of California or its officers or agents shall not be responsible for the accuracy or completeness of electronic copies of this plan sheet.

T.Y. LIN / MOFFATT & NICHOL
825 BATTERY STREET
SAN FRANCISCO, CA 94111

Caltrans now has a web site! To get to the web site, go to: http://www.dot.ca.gov

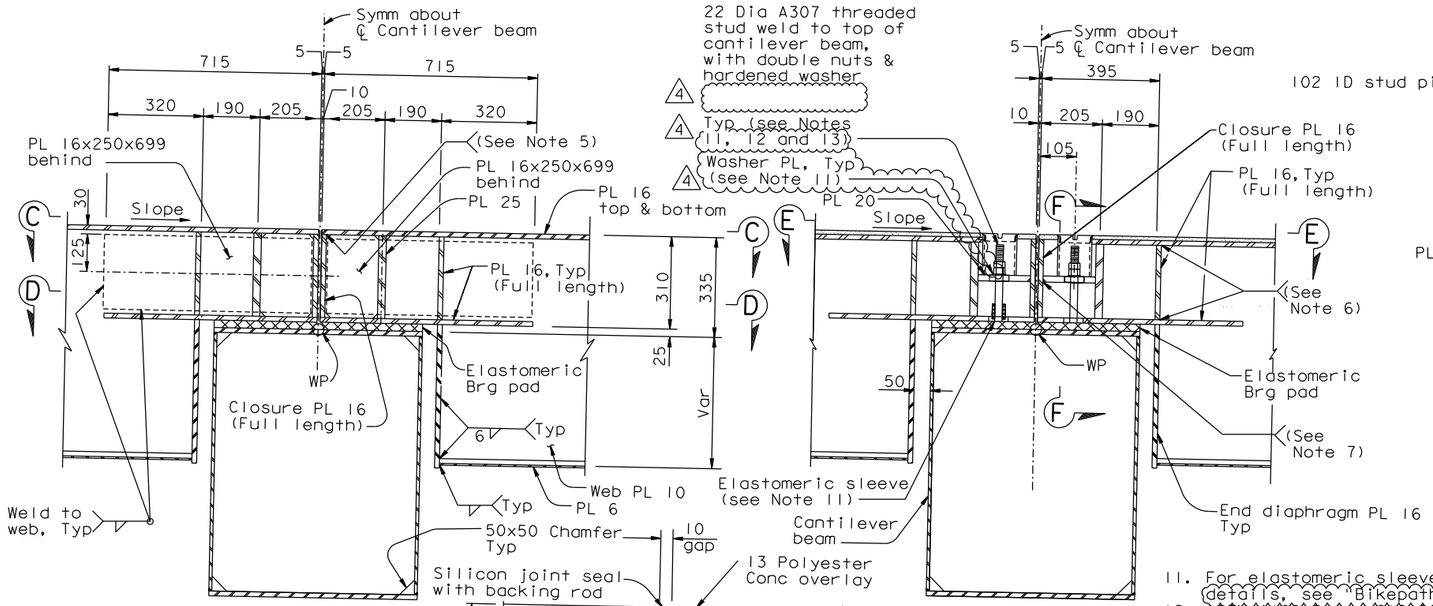

SECTION A-A (See Note 3)
1:10

SECTION B-B
1:10
(See Note 3)

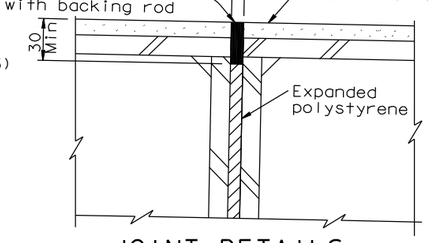

JOINT DETAILS
1:2.5

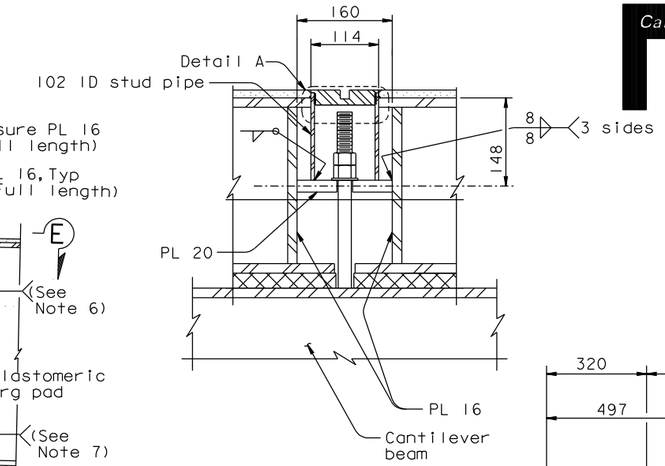

SECTION F-F
1:5

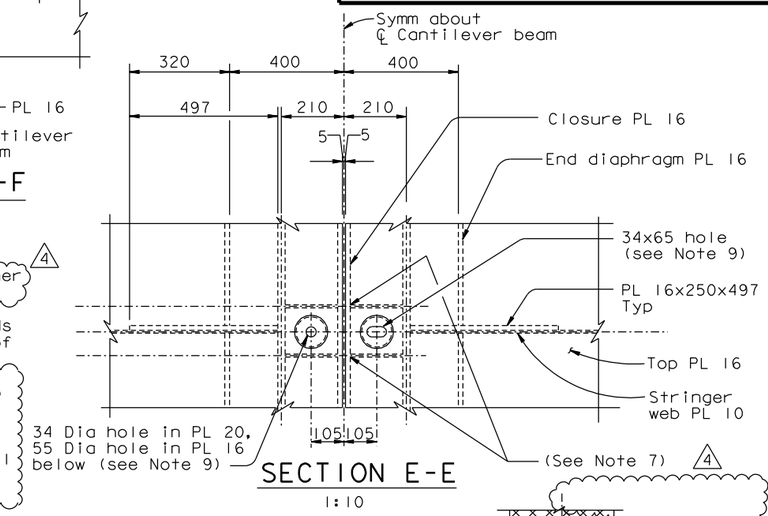

SECTION E-E
1:10

11. For elastomeric sleeve detail and plate washer details, see "Bikepath Details No.4A" sheet.
12. ASTM A108 Grade C1018, with mechanical properties conforming to that of Type B Studs in AWS D1.1 Table 7.1, may be used in lieu of ASTM A307.
13. Nuts on the east end of each bikepath panel shall be tightened prior to load transfer to provide 0.5 Fy tension in the studs. Nuts on the west end of each bikepath panel shall be tightened after load transfer to provide 0.5 Fy tension in the studs. Tightening shall be performed using a calibrated turn of the nut method.

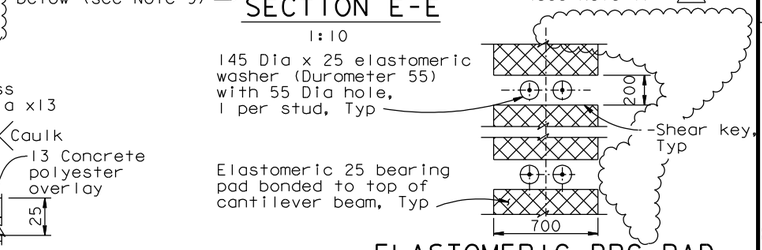

ELASTOMERIC BRG PAD
1:20

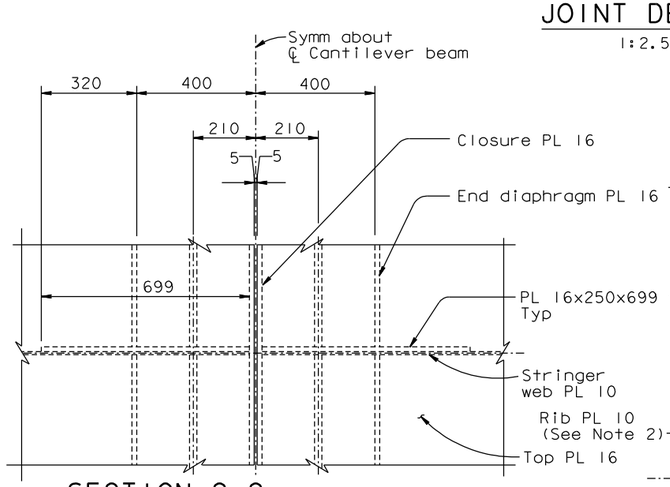

SECTION C-C
1:10

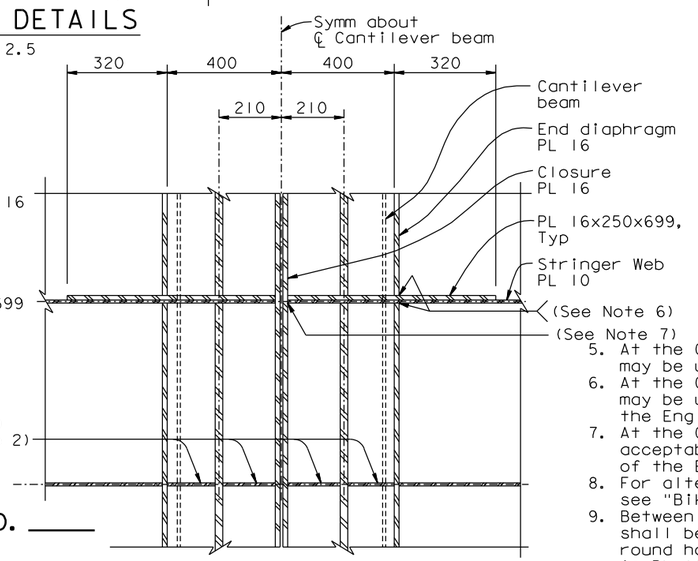

SECTION D-D
1:10

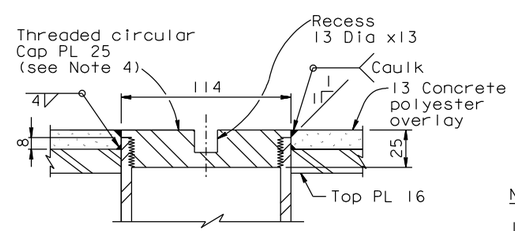

DETAIL A
1:2

5. At the Contractor's option, 10mm effective PJP may be used all around edges of the Closure PL 16.
6. At the Contractor's option, 10mm effective PJP may be used subject to review and approval of the Engineer.
7. At the Contractor's option, tight-fit is acceptable, subject to review and approval of the Engineer.
8. For alternate elastomeric bearing pad details, see "Bikepath Details No.4A" sheet.
9. Between PP 117 and PP 121, the slotted hole size shall be 44x75 in both PL 20 and PL 16 below. The round hole size shall be 44 Dia in PL 20 and 65 Dia in PL 16 below. Elastomeric washer hole shall be 55 Dia.
10. Note deleted.

NOTES:

1. For location of Sections A-A and B-B, see "Bikepath Framing Details No.1" through "Bikepath Framing Details No.6" sheets.
2. At the Contractor's option, Rib PL 10 may be omitted in area bounded by End Diaphragm PL 16 and Closure PL 16, subject to review and approval of the Engineer.
3. At the Contractor's option, CJP with backing, or 8mm double sided fillets may be used in lieu of CJP, subject to review and approval of the Engineer.
4. The threaded cap shall be supplied with two recesses spaced apart such that the cap can be installed with the aid of a spanner wrench. The recesses shall not penetrate the plate. The Contractor may propose alternate details for opening and closing the threaded cap, subject to review and approval of the Engineer. Threads shall follow ANSI standards. The Contractor may propose an alternate threading detail, subject to review and approval of the Engineer.

CONTRACT CHANGE ORDER NO. ____
SHEET ___ OF ___

REQUESTS FOR INFORMATION NOT ADDRESSED IN THIS CCO REMAIN IN FORCE

MARK	DATE	DESCRIPTIONS	BY	CH'D	CCO#
4	08/10/11	BIKEPATH PAD REVISIONS	GB	TH	211
3	02/04/11	BIKEPATH STUD ISSUE	CC	TH	186
2	08/20/10	BIKEPATH DETAILS	CC	TH	99
1	07/24/09	BIKEPATH DETAILS	CC	TH	99

REVISIONS

ALL DIMENSIONS ARE IN MILLIMETERS UNLESS OTHERWISE SHOWN

R. Valizadeh/V. Toan/Y.L./W.L./F.C.
DESIGN OVERSIGHT
SIGN OFF DATE 08/10/11

DESIGN	BY T. Ho	CHECKED T. McMeans	
DETAILS	BY R. Xu	CHECKED P. Ritchie	
QUANTITIES	BY C. Bernardo	CHECKED S. Shi	

PREPARED FOR THE STATE OF CALIFORNIA DEPARTMENT OF TRANSPORTATION

R. Manzanarez
PROJECT ENGINEER

BRIDGE NO. 34-0006L/R
KILOMETER POST 13.2/13.9

SAN FRANCISCO OAKLAND BAY BRIDGE
EAST SPAN SEISMIC SAFETY PROJECT
SELF-ANCHORED SUSPENSION BRIDGE
(SUPERSTRUCTURE & TOWER)

BIKEPATH DETAILS NO. 4

Rev. Date: 5-18-98

ORIGINAL SCALE IN MILLIMETERS FOR REDUCED PLANS 0 10 20 30 40 50 60 70 80 90 100

CU 04
EA 0120F1

DISREGARD PRINTS BEARING EARLIER REVISION DATES

REVISION DATES (PRELIMINARY STAGE ONLY): 08/07/99 05/31/01 04/08/02 07/01/02 12/13/02 11/13/05

SHEET 411R4 OF

FILE => I:\bb\04-012001\sas\contract plans and cco\cco\cco#211\1-original 08-10-11\dgn\agbwd04.dgn

USERNAME => DWinrow DATE PLOTTED => 10 AUG 2011 TIME PLOTTED => 11:02:35

100% PS&E

DIST.	COUNTY	ROUTE	KILOMETER POST TOTAL PROJECT	SHEET NO.	TOTAL SHEETS
04	SF	80	13.2/13.9	828SIR2	1204

Caltrans Metric

REGISTERED ENGINEER - CIVIL

08-20-10
PLANS APPROVAL DATE

REGISTERED PROFESSIONAL ENGINEER Tien Hung Ho No. C 43990 Exp. 06/30/13 CIVIL STATE OF CALIFORNIA

The State of California or its officers or agents shall not be responsible for the accuracy or completeness of electronic copies of this plan sheet.

T.Y. LIN / MOFFATT & NICHOL
825 BATTERY STREET
SAN FRANCISCO, CA 94111

Caltrans now has a web site! To get to the web site, go to: http://www.dot.ca.gov

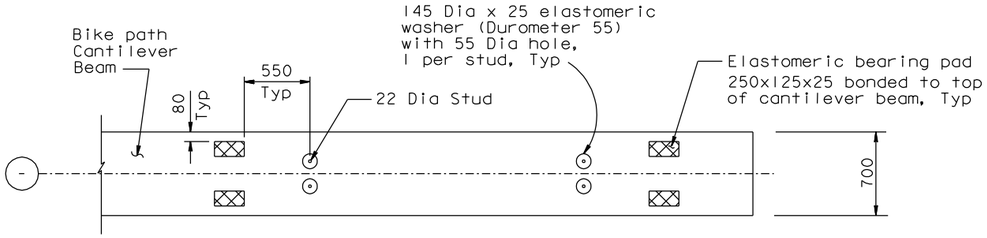

(PP5-PP115, PP123-PP127)

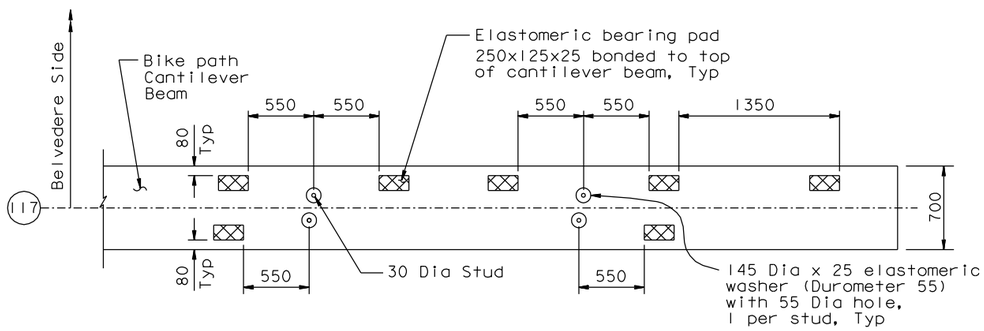

(PP117 SHOWN, PP121 OPPOSITE)

ALTERNATE ELASTOMERIC BEARING PAD

1:25

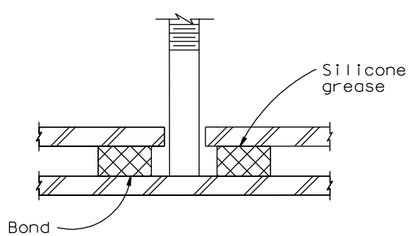

ELASTOMERIC WASHER DETAIL

1:2.5

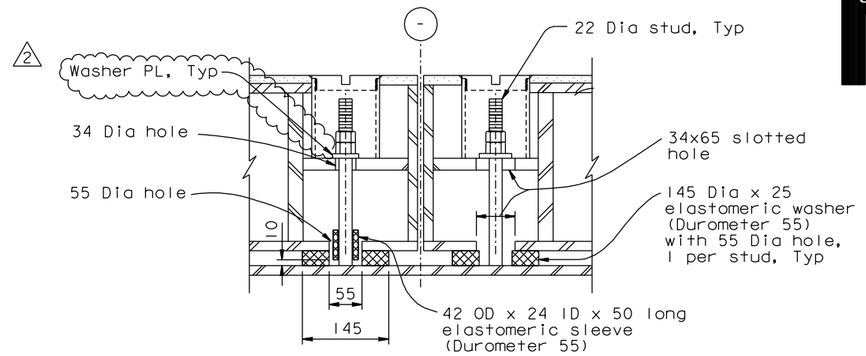

(PP5-PP115, PP123-PP127)

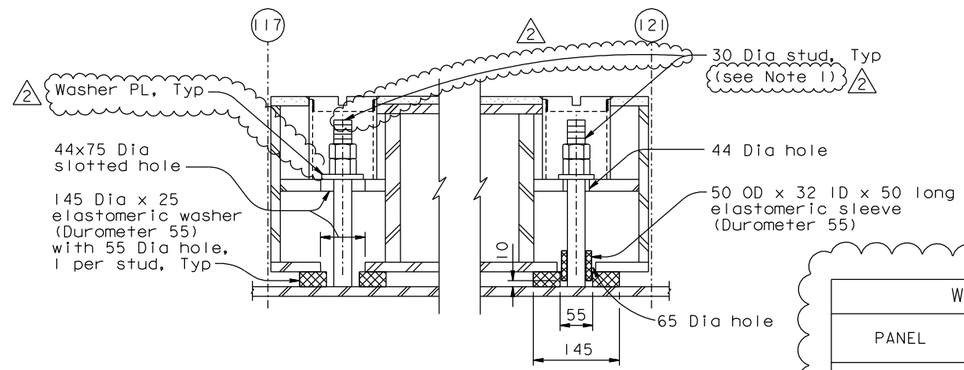

(PP117-PP121)

1:5

ELASTOMERIC SLEEVE DETAIL

1:5

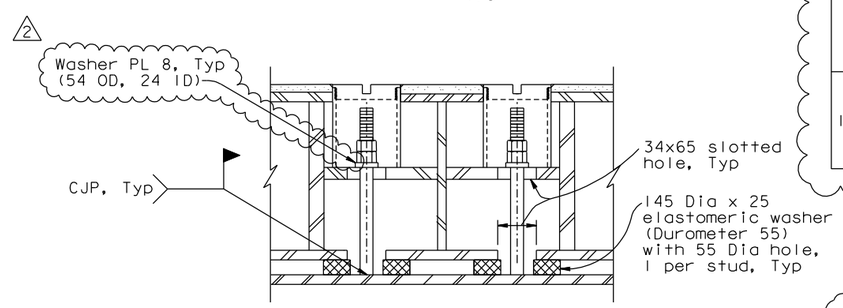

SECTION F-F

1:5

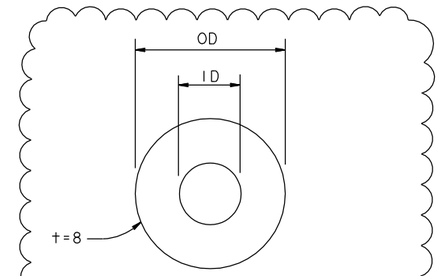

WASHER PLATE DETAIL

NTS

WASHER PLATE DIMENSIONS

PANEL	END	OD	ID
5 - 117, 121 - 127	EAST	44	24
	WEST	54	24
117 - 127 (BELVEDERE PANEL)	EAST	60	33
	WEST	70	33
127 - HINGE A ℄	PP 127	60	35
	PP 128	60	35

NOTES:

1. Nuts on the east end of each bikepath panel shall be tightened prior to load transfer to provide 0.5 Fy tension in the studs. Nuts on the west end of each bikepath panel shall be tightened after load transfer to provide 0.5 Fy tension in the studs. Tightening shall be performed by using a calibrated turn of the nut method.

CONTRACT CHANGE ORDER NO. _____
SHEET ____ OF ____

REQUESTS FOR INFORMATION NOT ADDRESSED IN THIS CCO REMAIN IN FORCE

MARK	DATE	DESCRIPTIONS	BY	CH'D	CCO#
2	08/10/11	BIKEPATH PAD REVISIONS	GB	TH	211
1	01/25/11	BIKEPATH STUD ISSUE	TH	CC	186
0	08/20/10	BIKEPATH DETAILS	CC	TH	99

REVISIONS

R. Valizadeh/V. Toan/Y.L./W.L./F.C.
DESIGN OVERSIGHT
SIGN OFF DATE 08/10/11

	BY	CHECKED
DESIGN	C. Choi	T. Ho
DETAILS	C. Choi	T. Ho
QUANTITIES	C. Choi	T. Ho

PREPARED FOR THE STATE OF CALIFORNIA DEPARTMENT OF TRANSPORTATION

ALL DIMENSIONS ARE IN MILLIMETERS UNLESS OTHERWISE SHOWN

R. Manzanarez
PROJECT ENGINEER

BRIDGE NO. 34-0006L/R
KILOMETER POST 13.2/13.9

SAN FRANCISCO OAKLAND BAY BRIDGE
EAST SPAN SEISMIC SAFETY PROJECT
SELF-ANCHORED SUSPENSION BRIDGE
(SUPERSTRUCTURE & TOWER)

BIKEPATH DETAILS NO. 4A

Rev. Date: 5-18-98

ORIGINAL SCALE IN MILLIMETERS FOR REDUCED PLANS 0 10 20 30 40 50 60 70 80 90 100

CU 04
EA 0120F1

DISREGARD PRINTS BEARING EARLIER REVISION DATES 08/20/10

REVISION DATES (PRELIMINARY STAGE ONLY)

SHEET 411SIR2 OF

FILE => I:\bb\04-012001\sas\contract plans and cco\cco\cco=211\1-original 08-10-11\dgn\agbwd04a.dgn

USERNAME => DWinrow DATE PLOTTED => 10 AUG 2011 TIME PLOTTED => 11:03:25

100 % PS&E

DIST.	COUNTY	ROUTE	KILOMETER POST TOTAL PROJECT	SHEET NO.	TOTAL SHEETS
04	SF	80	13.2/13.9	832R5	1204

REGISTERED ENGINEER - CIVIL

12-06-04
PLANS APPROVAL DATE

The State of California or its officers or agents shall not be responsible for the accuracy or completeness of electronic copies of this plan sheet.

REGISTERED PROFESSIONAL ENGINEER Tien Hung Ho No. C 43990 Exp. 6/30/13 CIVIL STATE OF CALIFORNIA

T.Y. LIN / MOFFATT & NICHOL
825 BATTERY STREET
SAN FRANCISCO, CA 94111

Caltrans now has a web site! To get to the web site, go to: http://www.dot.ca.gov

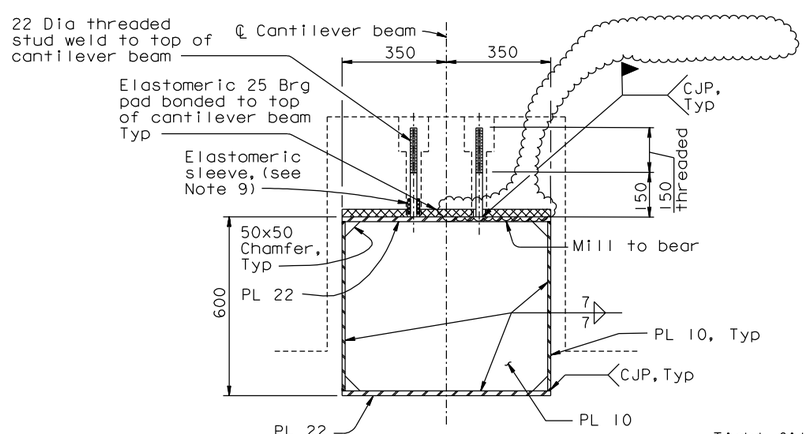

SECTION C-C
1:10

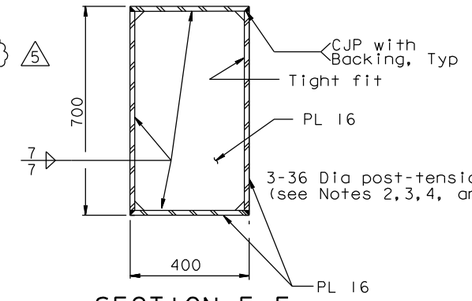

SECTION E-E
1:10

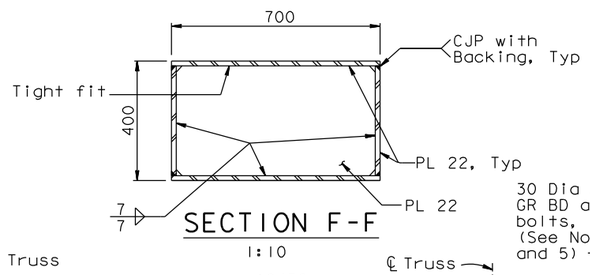

SECTION F-F
1:10

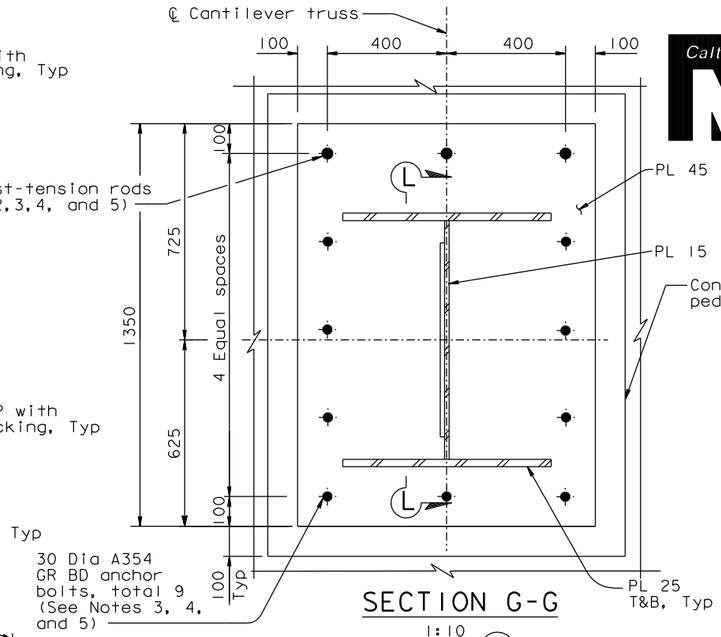

SECTION G-G
1:10

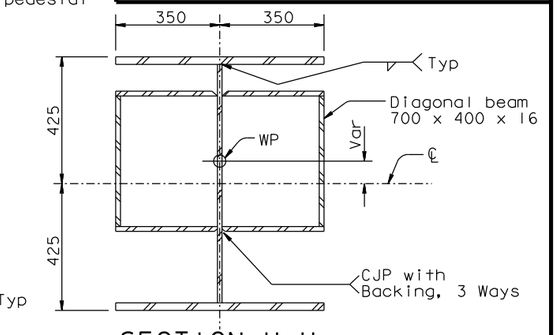

SECTION H-H
1:10

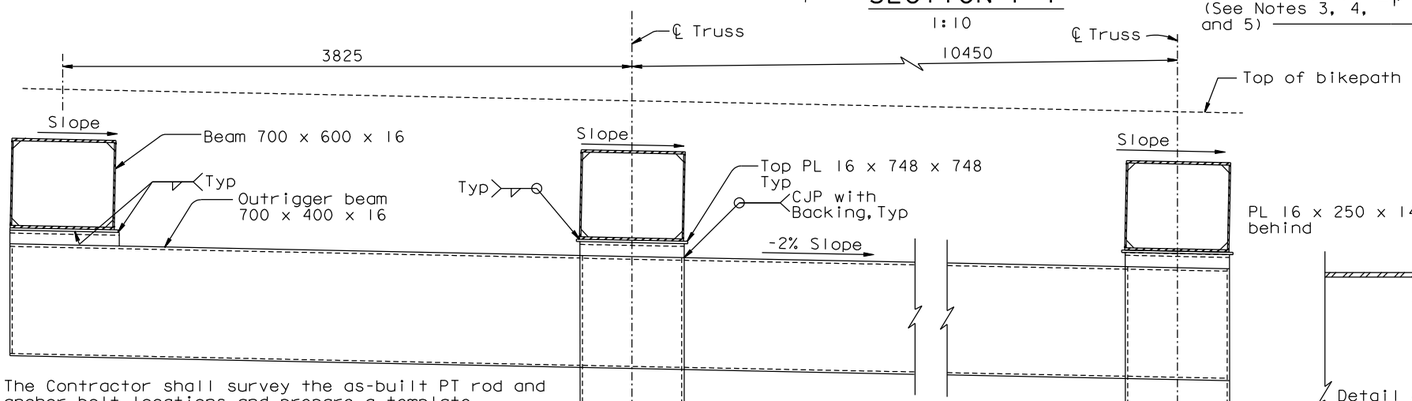

4. The Contractor shall survey the as-built PT rod and anchor bolt locations and prepare a template. This template shall be trial fit in the field prior to drilling the holes in the base plate.
5. The Contractor shall furnish all PT and anchor bolt components, and shall provide corrosion protection covering exposed ends.
6. For details not shown, see "Bikepath Details No.17, 18 & 19" sheets.
7. Note deleted.
8. Note deleted.
9. For elastomeric sleeve detail, see "Bikepath Details No.4A" sheet.

SECTION D-D
1:20

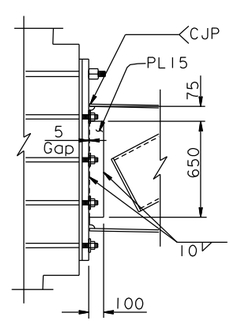

SECTION L-L
1:20

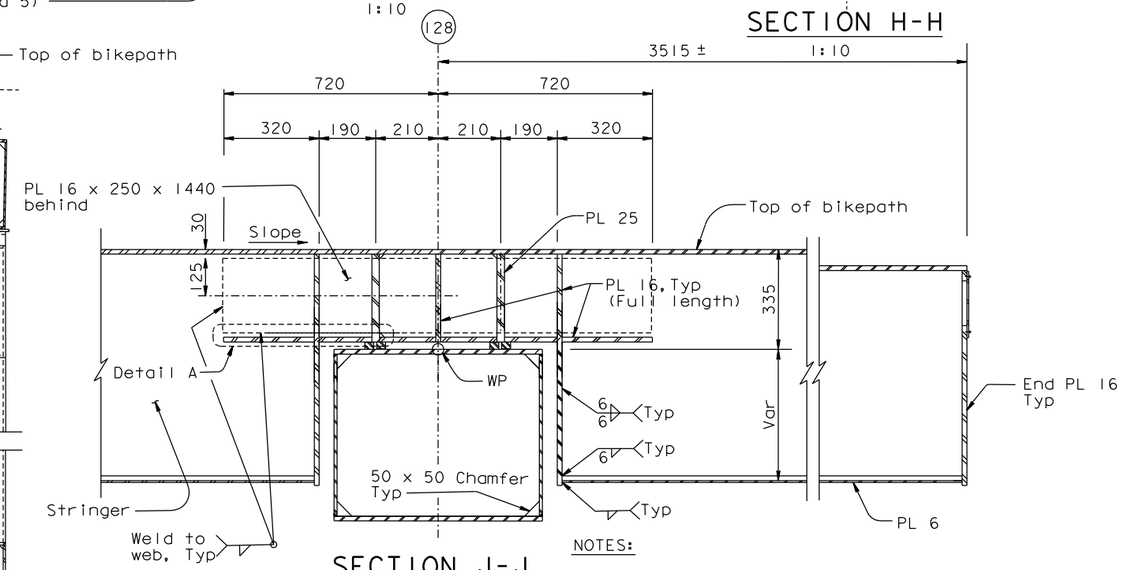

SECTION J-J
1:10
(See Note 6)

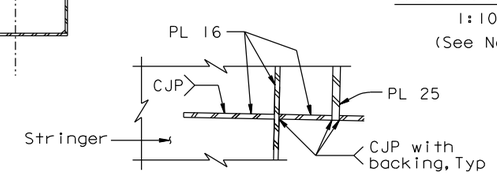

DETAIL A
1:10

NOTES:

1. For Detail D, see "Bikepath Details No.5" sheet.
2. PT rods are ASTM A722 high strength 36 Dia rods (Fu=1030 MPa), with standard galvanized steel ducts, unless specified otherwise. The jacking force of 734 KN to be applied by Others. The Contractor may substitute the PT duct with a PT supplier recommended debonding tape, subject to review and approval of the Engineer. If the PT duct substitution is approved by the Engineer, the spherical nut inside the W2 cap beam is not required.
3. The tolerance for placement of the PT rods and anchor bolts is ±25 mm.

ALL DIMENSIONS ARE IN MILLIMETERS UNLESS OTHERWISE SHOWN

CONTRACT CHANGE ORDER NO. _____
SHEET ____ OF ____

REQUESTS FOR INFORMATION NOT ADDRESSED IN THIS CCO REMAIN IN FORCE

MARK	DATE	DESCRIPTIONS	BY	CH'D	CCO#
5	08/10/11	BIKEPATH PAD REVISIONS	GB	TH	211
4	03/04/11	BIKEPATH DETAILS	TH	CC	99
3	01/25/11	BIKEPATH STUD ISSUE	TH	CC	186
2	08/20/10	BIKEPATH DETAILS	TH	CC	99
1	05/04/07	W2 CAP BEAM ISD RESOLUTION	JD	TH	34SI

REVISIONS

R. Valizadeh/V. Toan/Y.L./W.L./F.C.
DESIGN OVERSIGHT
SIGN OFF DATE 08/10/11

	BY	CHECKED
DESIGN	T. Ho	T. McMeans
DETAILS	R. Xu	P. Ritchie
QUANTITIES	C. Bernardo	S. Shi

PREPARED FOR THE STATE OF CALIFORNIA DEPARTMENT OF TRANSPORTATION

R. Manzanarez
PROJECT ENGINEER

BRIDGE NO. 34-0006L/R
KILOMETER POST 13.2/13.9

SAN FRANCISCO OAKLAND BAY BRIDGE
EAST SPAN SEISMIC SAFETY PROJECT
SELF-ANCHORED SUSPENSION BRIDGE
(SUPERSTRUCTURE & TOWER)

BIKEPATH DETAILS NO.8

Rev. Date: 5-18-98

ORIGINAL SCALE IN MILLIMETERS FOR REDUCED PLANS 0 10 20 30 40 50 60 70 80 90 100

CU 04
EA 0120F1

DISREGARD PRINTS BEARING EARLIER REVISION DATES

REVISION DATES (PRELIMINARY STAGE ONLY) 05/31/01 04/08/02 07/01/02 12/18/02 11/13/05

SHEET 415R5 OF

FILE => I:\bb\04-012001\sas\contract plans and cco\cco\cco#211\1-original 08-10-11\dgn\agbwd08.dgn

USERNAME => DWinrow DATE PLOTTED => 10 AUG 2011 TIME PLOTTED => 11:04:25

100 % PS&E

DIST.	COUNTY	ROUTE	KILOMETER POST TOTAL PROJECT	SHEET NO.	TOTAL SHEETS
04	SF	80	13.2/13.9	833R5	1204

Caltrans Metric

REGISTERED ENGINEER - CIVIL

12-6-04
PLANS APPROVAL DATE

REGISTERED PROFESSIONAL ENGINEER Tien Hung Ho No. C 43990 Exp. 6/30/13 CIVIL STATE OF CALIFORNIA

The State of California or its officers or agents shall not be responsible for the accuracy or completeness of electronic copies of this plan sheet.

T.Y. LIN / MOFFATT & NICHOL
825 BATTERY STREET
SAN FRANCISCO, CA 94111

Caltrans now has a web site! To get to the web site, go to: http://www.dot.ca.gov

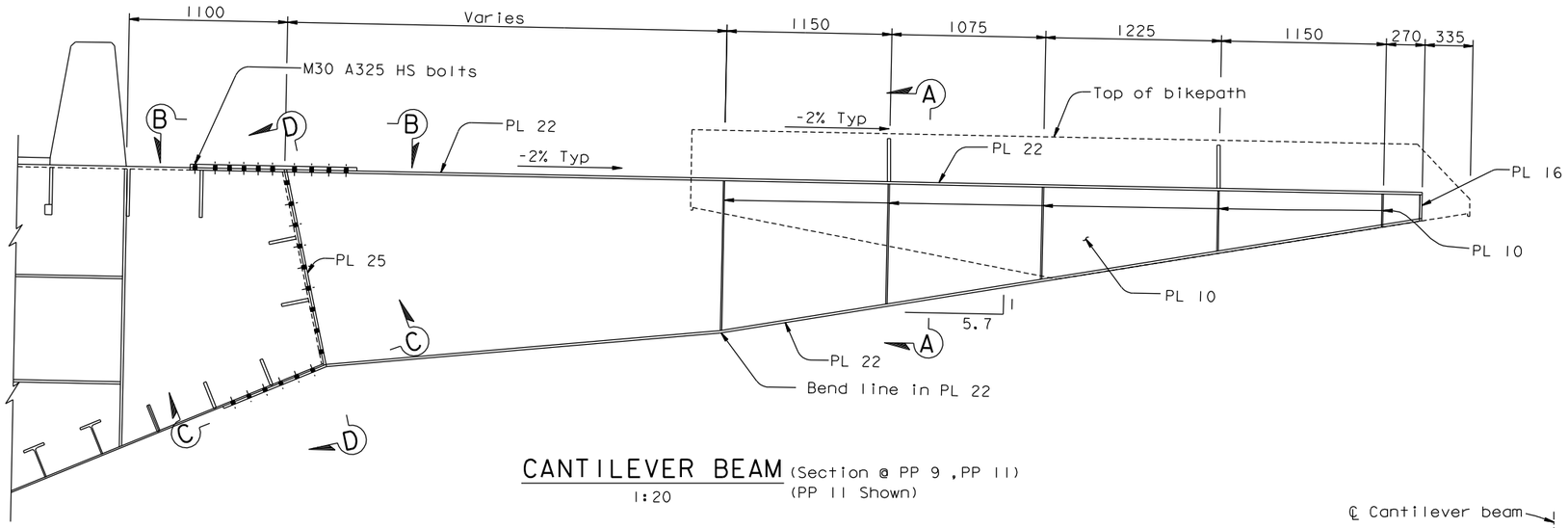

CANTILEVER BEAM (Section @ PP 9 ,PP 11)
1:20 (PP 11 Shown)

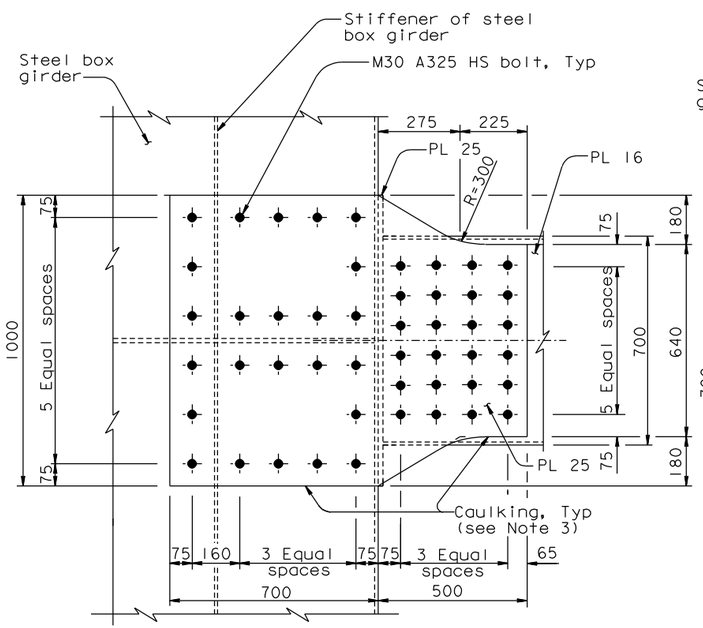

SECTION B-B
1:10

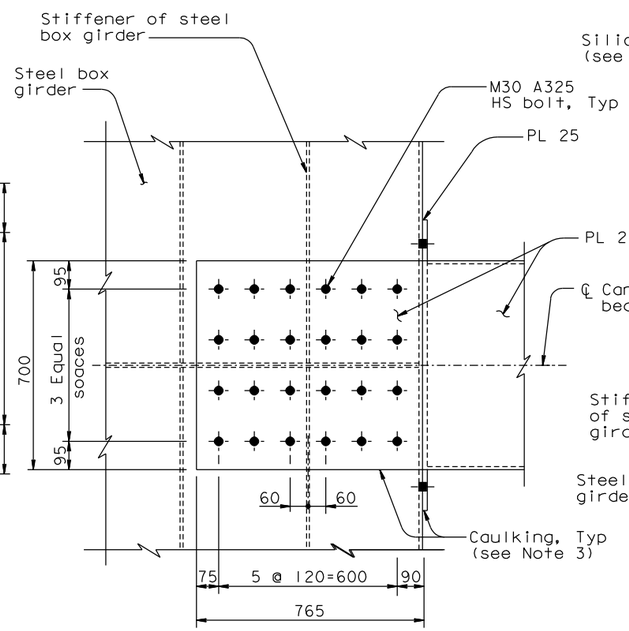

SECTION C-C
1:10

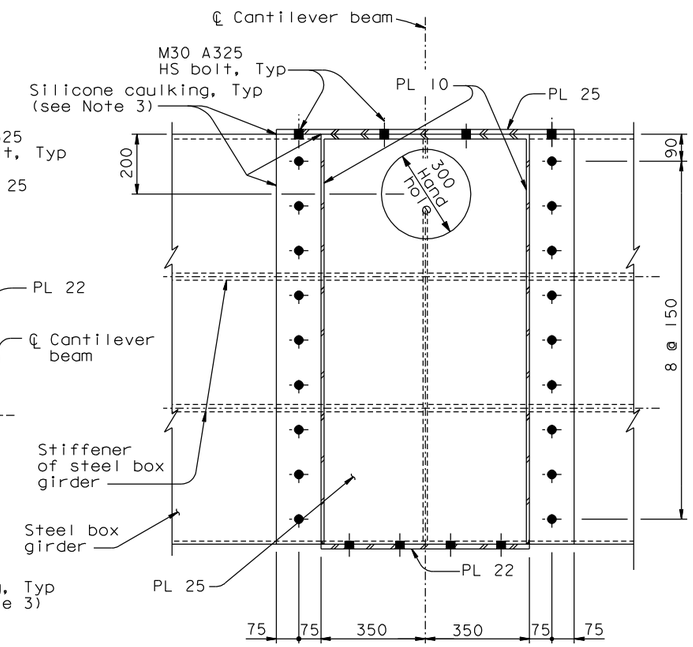

SECTION D-D
1:10

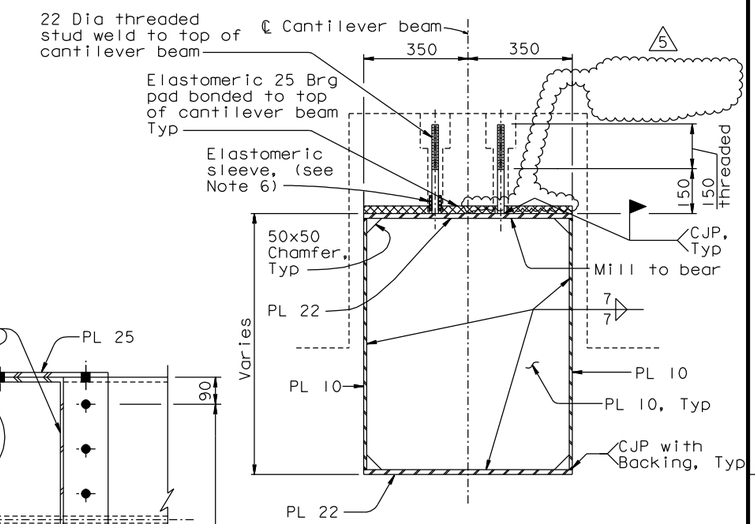

SECTION A-A
1:10

NOTES:

1. Bikepath deck similar to typical bikepath deck. For details, see "Bikepath Details No.3" sheet.
2. For details not shown, see "Bikepath Details No.1" sheet.
3. Caulking shall be provided along edges of bolted connection between bikepath cantilever beam and box girder.
4. Note deleted. (5)
5. Note deleted. (5)
6. For elastomeric sleeve detail, see "Bikepath Details No.4A" sheet.

CONTRACT CHANGE ORDER NO. ____
SHEET ___ OF ___

REQUESTS FOR INFORMATION NOT ADDRESSED IN THIS CCO REMAIN IN FORCE

MARK	DATE	DESCRIPTIONS	BY	CH'D	CCO#
5	08/10/11	BIKEPATH PAD REVISIONS	GB	TH	211
4	01/25/11	BIKEPATH STUD ISSUE	TH	CC	186
3	08/20/10	BIKEPATH DETAILS	TH	CC	99
2	07/07/08	CAULKING	AS	TH	66
1	07/20/07	BIKEPATH BRACKETS	GB	TH	33

REVISIONS

R. Valizadeh/V. Toan/Y.L./W.L./F.C.
DESIGN OVERSIGHT
SIGN OFF DATE 08/10/11

	BY	CHECKED
DESIGN	T. Ho	T. McMeans
DETAILS	R. Xu	P. Ritchie
QUANTITIES	C. Bernardo	S. Shi

PREPARED FOR THE STATE OF CALIFORNIA DEPARTMENT OF TRANSPORTATION

ALL DIMENSIONS ARE IN MILLIMETERS UNLESS OTHERWISE SHOWN

R. Manzanarez
PROJECT ENGINEER

BRIDGE NO. 34-0006L/R
KILOMETER POST 13.2/13.9

SAN FRANCISCO OAKLAND BAY BRIDGE
EAST SPAN SEISMIC SAFETY PROJECT
SELF-ANCHORED SUSPENSION BRIDGE
(SUPERSTRUCTURE & TOWER)

BIKEPATH DETAILS NO. 9

Rev. Date: 5-18-98

ORIGINAL SCALE IN MILLIMETERS FOR REDUCED PLANS 0 10 20 30 40 50 60 70 80 90 100

CU 04
EA 0120F1

DISREGARD PRINTS BEARING EARLIER REVISION DATES

REVISION DATES (PRELIMINARY STAGE ONLY) 05/17/01 04/08/02 07/01/02 12/18/02 11/13/05

SHEET 416R5 OF

FILE => L:\BB\04-012001\SAS\Contract Plans and CCO\CCO\CCO#211\1-Original 08-10-11\DGN\agbwd09.dgn

100% PS&E

DATE PLOTTED => 10 AUG 2011 TIME PLOTTED => 11:11:28

USERNAME => DWinrow

DIST.	COUNTY	ROUTE	KILOMETER POST TOTAL PROJECT	SHEET NO.	TOTAL SHEETS
04	SF	80	13.2/13.9	834R6	1204

REGISTERED ENGINEER - CIVIL

12-6-04
PLANS APPROVAL DATE

REGISTERED PROFESSIONAL ENGINEER Tien Hung Ho No. C 43990 Exp. 6/30/13 CIVIL STATE OF CALIFORNIA

The State of California or its officers or agents shall not be responsible for the accuracy or completeness of electronic copies of this plan sheet.

T.Y. LIN / MOFFATT & NICHOL
825 BATTERY STREET
SAN FRANCISCO, CA 94111

Caltrans now has a web site! To get to the web site, go to: http://www.dot.ca.gov

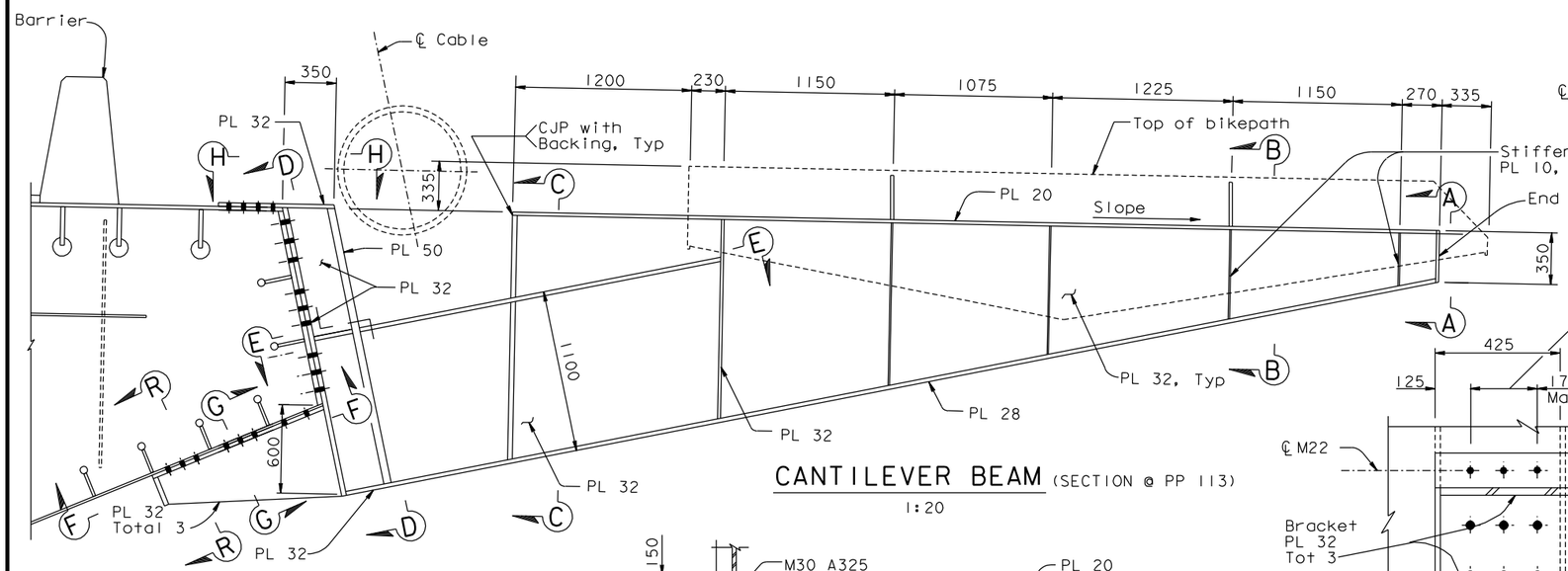

CANTILEVER BEAM (SECTION @ PP 113)
1:20

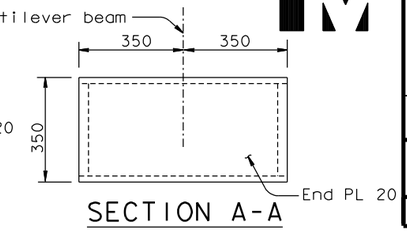

SECTION A-A
1:10

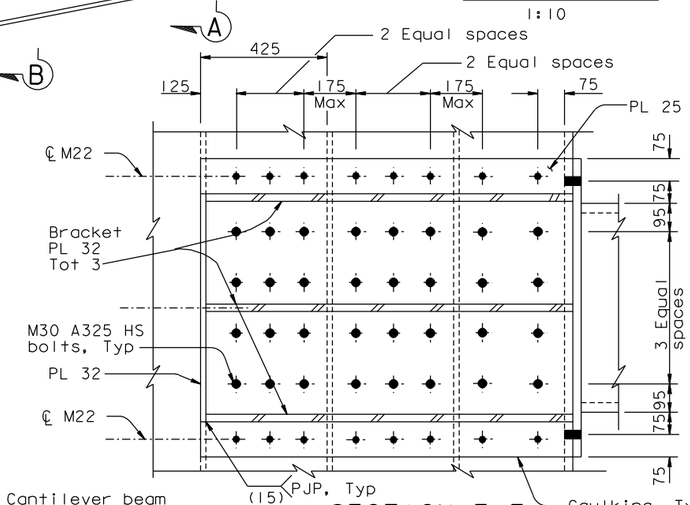

SECTION F-F
1:10

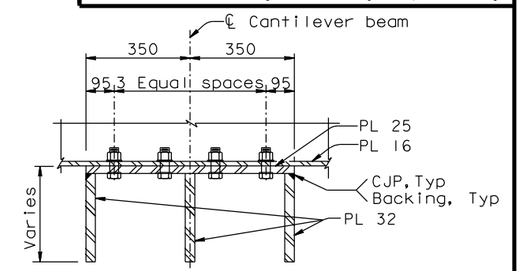

SECTION G-G
1:10

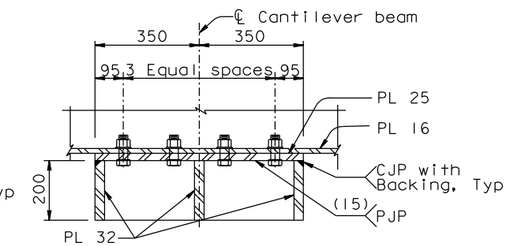

SECTION R-R
1:10

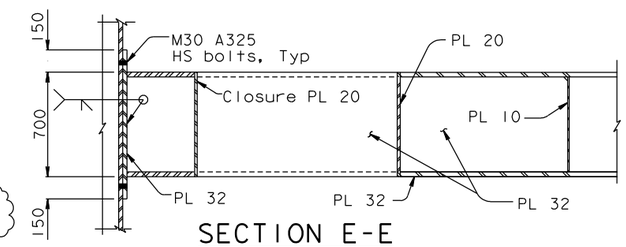

SECTION E-E
1:20

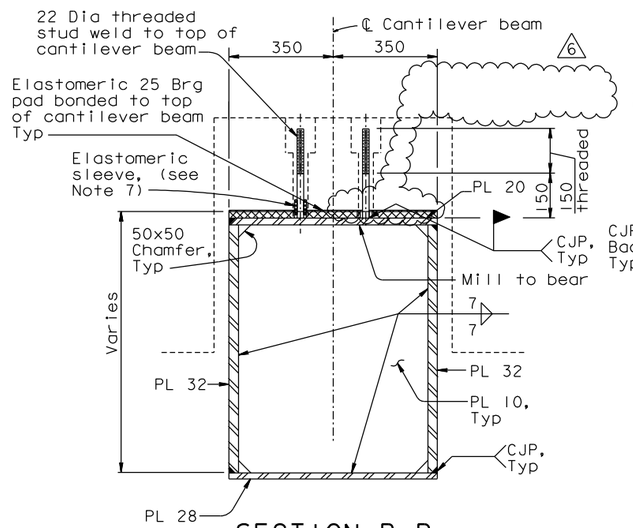

SECTION B-B
1:10

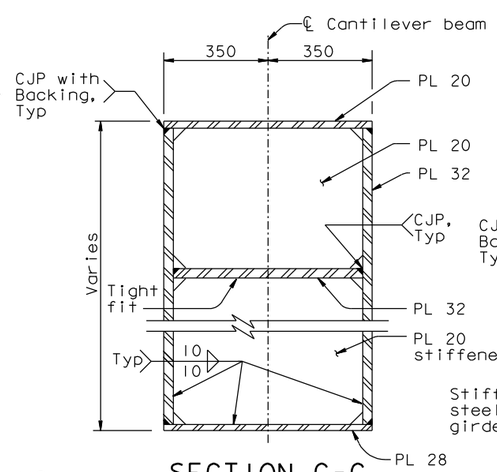

SECTION C-C
1:10

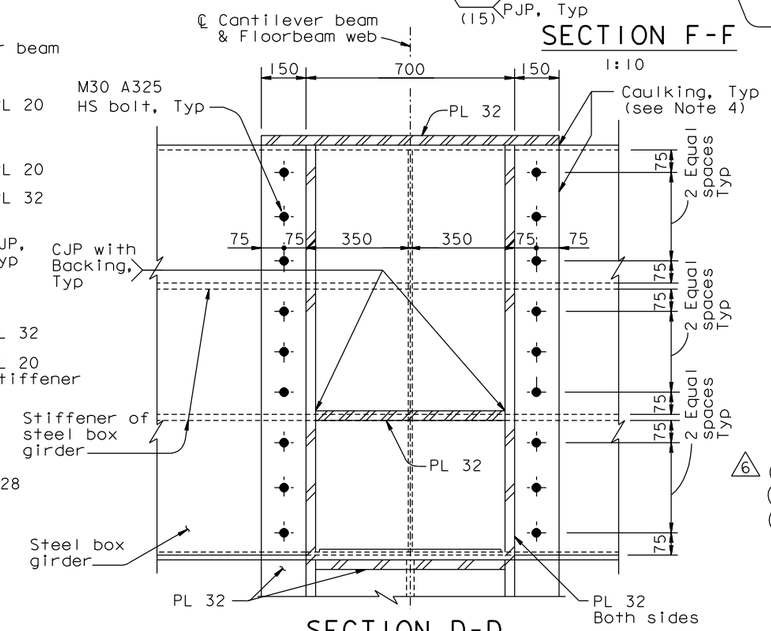

SECTION D-D
1:10

ALL DIMENSIONS ARE IN MILLIMETERS UNLESS OTHERWISE SHOWN

NOTES:

1. The cable location shown is based on the information provided in "Suspension Cable Layout" sheets. The Contractor shall verify these locations based on the "as built" cable profile described in "Construction Sequence" sheets. In the event of a conflict, bikepath bracket details may be revised and submitted to the Engineer for review and approval.
2. Bikepath deck similar to typical bikepath deck, for details, see "Bikepath Details No.3" sheets.
3. For Section H-H, see Section F-F of "Bikepath Details No.11" sheet.
4. Caulking shall be provided along all edges of bolted connection between bikepath cantilever beam and box girder.
5. Note deleted. (6)
6. Note Deleted.
7. For elastomeric sleeve detail, see "Bikepath Details No.4A" sheet.

CONTRACT CHANGE ORDER NO. ____
SHEET ____ OF ____

REQUESTS FOR INFORMATION NOT ADDRESSED IN THIS CCO REMAIN IN FORCE

MARK	DATE	DESCRIPTIONS	BY	CH'D	CCO#
6	08/10/11	BIKEPATH PAD REVISIONS	GB	TH	211
5	01/25/11	BIKEPATH STUD ISSUE	TH	CC	186
4	08/20/10	BIKEPATH DETAILS	TH	CC	99
3	12/23/08	BIKEPATH DETAILS	TH	MN	99
2	07/07/08	CAULKING	AS	TH	66
1	07/20/07	BIKEPATH BRACKETS	GB	TH	33

REVISIONS

R. Valizadeh/V. Toan/Y.L./W.L./F.C.
DESIGN OVERSIGHT
SIGN OFF DATE 08/10/11

	BY	CHECKED
DESIGN	T. Ho	T. McMeans
DETAILS	R. Xu	P. Ritchie
QUANTITIES	C. Bernardo	S. Shi

PREPARED FOR THE STATE OF CALIFORNIA DEPARTMENT OF TRANSPORTATION

R. Manzanarez
PROJECT ENGINEER

BRIDGE NO. 34-0006L/R
KILOMETER POST 13.2/13.9

SAN FRANCISCO OAKLAND BAY BRIDGE
EAST SPAN SEISMIC SAFETY PROJECT
SELF-ANCHORED SUSPENSION BRIDGE
(SUPERSTRUCTURE & TOWER)

BIKEPATH DETAILS NO. 10

Rev. Date: 5-18-98

ORIGINAL SCALE IN MILLIMETERS FOR REDUCED PLANS 0 10 20 30 40 50 60 70 80 90 100

CU 04
EA 0120F1

DISREGARD PRINTS BEARING EARLIER REVISION DATES

REVISION DATES (PRELIMINARY STAGE ONLY) 05/17/01 04/08/02 07/01/02 12/19/02

SHEET 417R6 OF

FILE => L:\BB\04-012001\SAS\Contract Plans and CCO\CCO\CCO#211\1-Original 08-10-11\DGN\agbwd10.dgn

100% PS&E DATE PLOTTED => 10 AUG 2011 TIME PLOTTED => 11:13:15

USERNAME => DWinrow

DIST.	COUNTY	ROUTE	KILOMETER POST TOTAL PROJECT	SHEET NO.	TOTAL SHEETS
04	SF	80	13.2/13.9	836R6	1204

REGISTERED ENGINEER - CIVIL

12-6-04
PLANS APPROVAL DATE

REGISTERED PROFESSIONAL ENGINEER Tien Hung Ho No. C 43990 Exp. 06/30/13 CIVIL STATE OF CALIFORNIA

The State of California or its officers or agents shall not be responsible for the accuracy or completeness of electronic copies of this plan sheet.

T.Y. LIN / MOFFATT & NICHOL
825 BATTERY STREET
SAN FRANCISCO, CA 94111

Caltrans now has a web site! To get to the web site, go to: http://www.dot.ca.gov

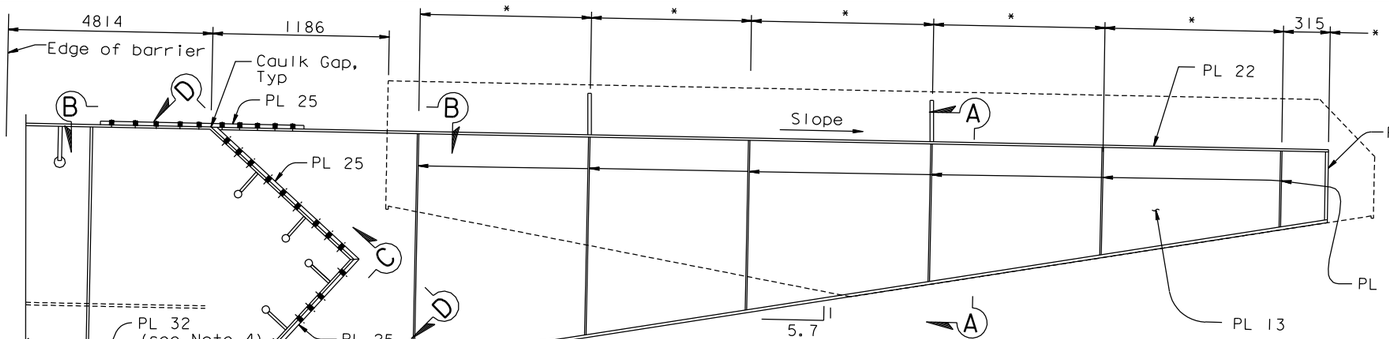

CANTILEVER BEAM (PP 121)
1:20

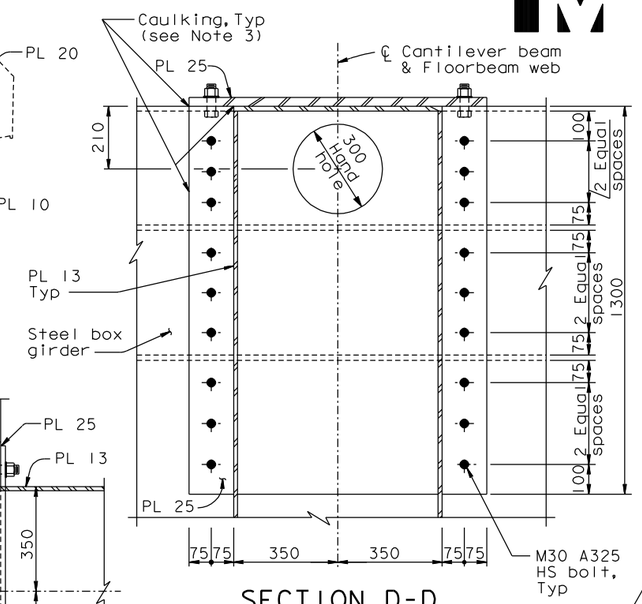

SECTION D-D
1:10

NOTES:

1. Stiffener plate spacing to match bikepath stringer spacing, see "Bikepath Framing Details No.5" sheet.
2. For call box support locations and details, see "Road Plans".
3. Caulking shall be provided along all edges of bolted connection between bikepath cantilever beam and box girder.
4. For bikepath bracket stiffener, see Note 6 on "Floorbeam At East Transition No.4" sheet.
5. Note deleted. (6)
6. Note deleted.
7. For elastomeric sleeve detail, see "Bikepath Details No.4A" sheet.

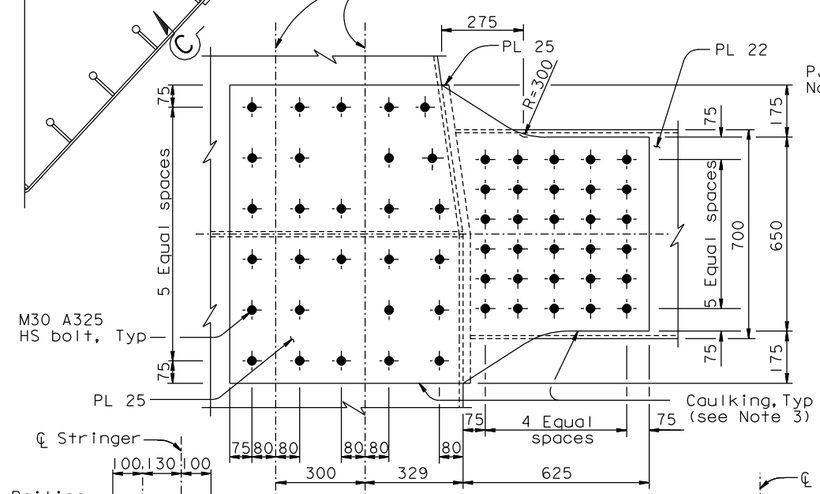

VIEW B-B
1:10

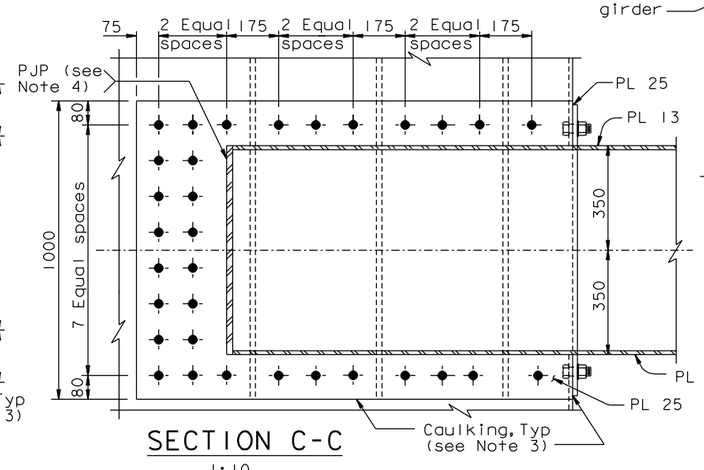

SECTION C-C
1:10

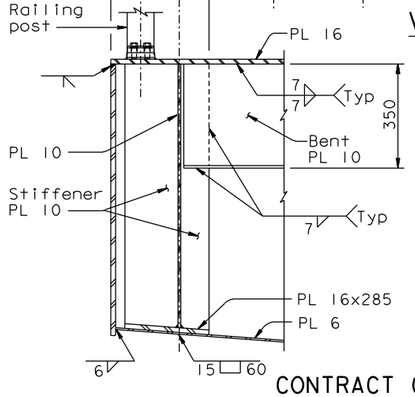

DETAIL E
1:10

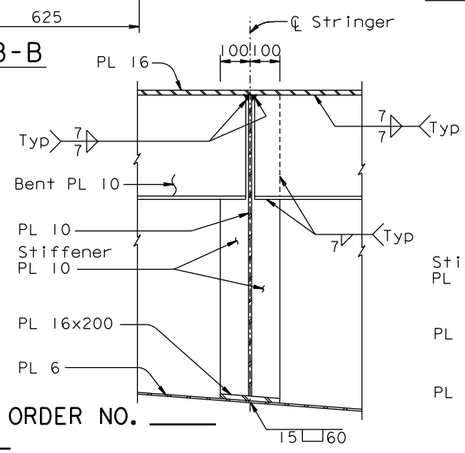

DETAIL F
1:10

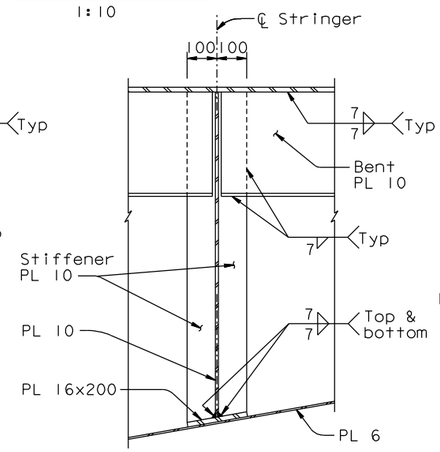

DETAIL G
1:10

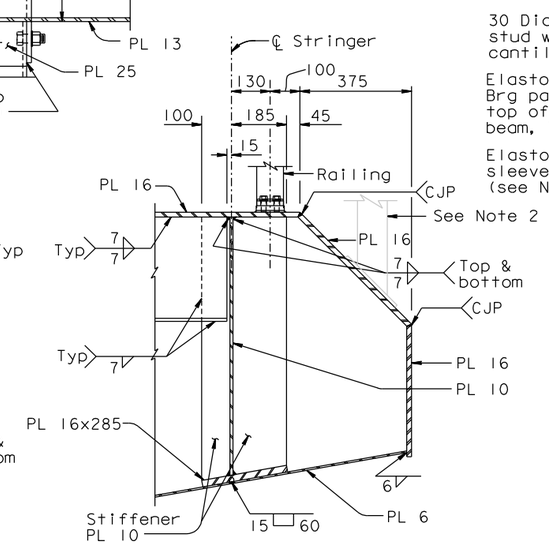

DETAIL H
1:10

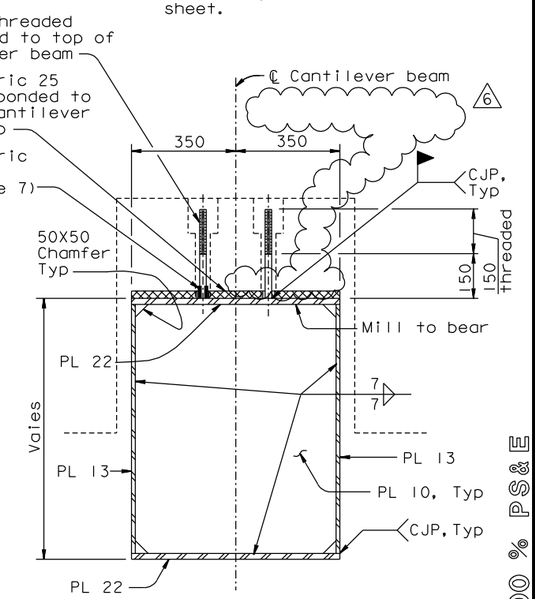

SECTION A-A
1:10

CONTRACT CHANGE ORDER NO. ____
SHEET ____ OF ____

REQUESTS FOR INFORMATION NOT ADDRESSED IN THIS CCO REMAIN IN FORCE

MARK	DATE	DESCRIPTIONS	BY	CH'D	CCO#
6	08/10/11	BIKEPATH PAD REVISIONS	GB	TH	211
5	01/25/11	BIKEPATH STUD ISSUE	TH	CC	186
4	09/24/10	BIKEPATH DETAILS	TH	CC	99
3	08/20/10	BIKEPATH DETAILS	TH	CC	99
2	07/07/08	CAULKING	AS	TH	66
1	07/20/07	BIKEPATH BRACKETS	GB	TH	33

REVISIONS

ALL DIMENSIONS ARE IN MILLIMETERS UNLESS OTHERWISE SHOWN

R. Valizadeh/V. Toan/Y.L./W.L./F.C.
DESIGN OVERSIGHT
SIGN OFF DATE 08/10/11

	BY	CHECKED
DESIGN	T. Ho	T. McMeans
DETAILS	R. Xu	P. Ritchie
QUANTITIES	C. Bernardo	S. Shi

PREPARED FOR THE STATE OF CALIFORNIA DEPARTMENT OF TRANSPORTATION

R. Manzanarez
PROJECT ENGINEER

BRIDGE NO. 34-0006L/R
KILOMETER POST 13.2/13.9

SAN FRANCISCO OAKLAND BAY BRIDGE
EAST SPAN SEISMIC SAFETY PROJECT
SELF-ANCHORED SUSPENSION BRIDGE
(SUPERSTRUCTURE & TOWER)

BIKEPATH DETAILS NO. 12

Rev. Date: 5-18-98

ORIGINAL SCALE IN MILLIMETERS FOR REDUCED PLANS 0 10 20 30 40 50 60 70 80 90 100

CU 04
EA 0120F1

DISREGARD PRINTS BEARING EARLIER REVISION DATES

REVISION DATES (PRELIMINARY STAGE ONLY) 05/31/01 04/08/02 07/01/02 12/19/02 11/13/05

SHEET 419R6 OF

FILE => I:\bb\04-012001\sas\contract plans and cco\cco\cco#211\1-original 08-10-11\dgn\agbwd12.dgn

100 % PS&E

USERNAME => DWinrow DATE PLOTTED => 10 AUG 2011 TIME PLOTTED => 11:14:24

DIST.	COUNTY	ROUTE	KILOMETER POST TOTAL PROJECT	SHEET NO.	TOTAL SHEETS
04	SF	80	13.2/13.9	838R6	1204

Caltrans Metric

REGISTERED ENGINEER - CIVIL

12-6-04

PLANS APPROVAL DATE

REGISTERED PROFESSIONAL ENGINEER Tien Hung Ho No. C 43990 Exp. 6/30/13 CIVIL STATE OF CALIFORNIA

The State of California or its officers or agents shall not be responsible for the accuracy or completeness of electronic copies of this plan sheet.

T.Y. LIN / MOFFATT & NICHOL
825 BATTERY STREET
SAN FRANCISCO, CA 94111

Caltrans now has a web site! To get to the web site, go to: http://www.dot.ca.gov

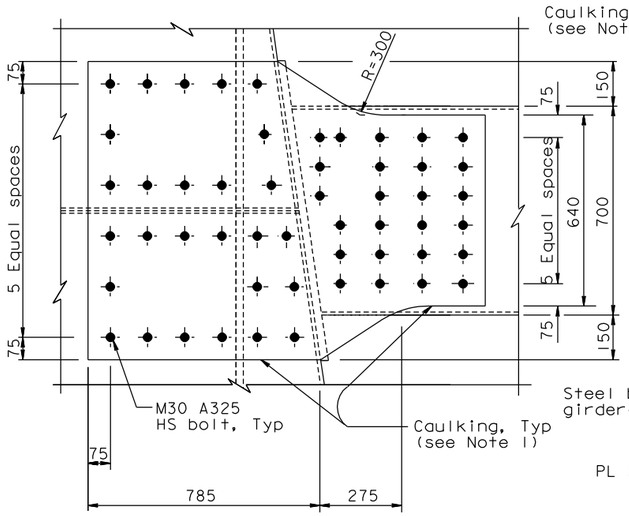

VIEW J-J
1:10

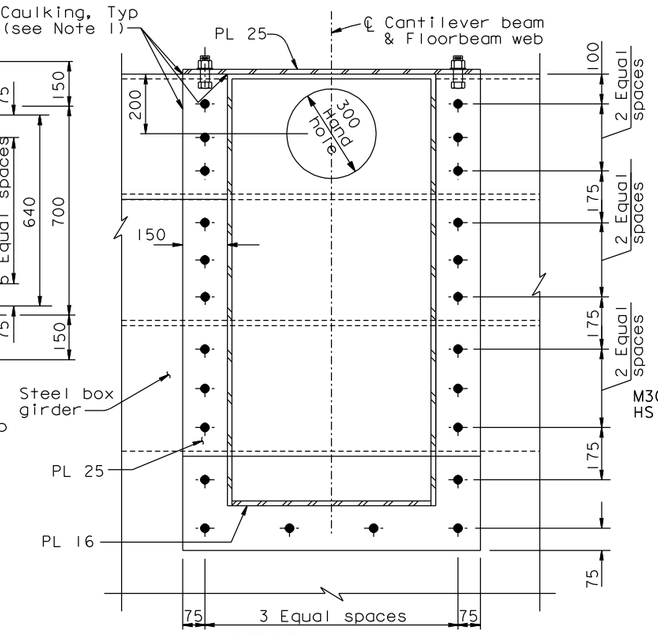

SECTION K-K
1:10

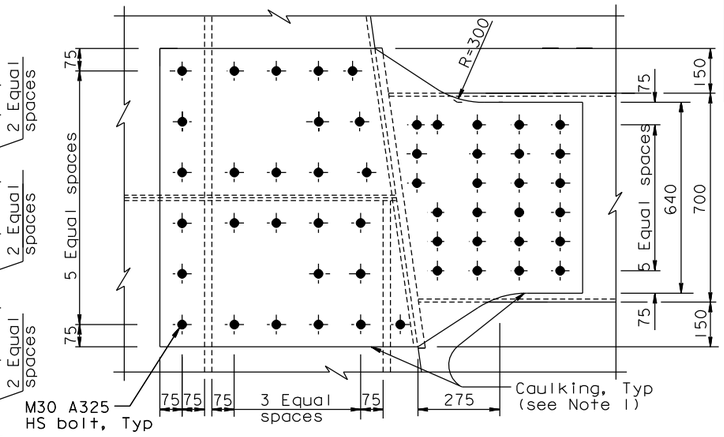

VIEW L-L
1:10

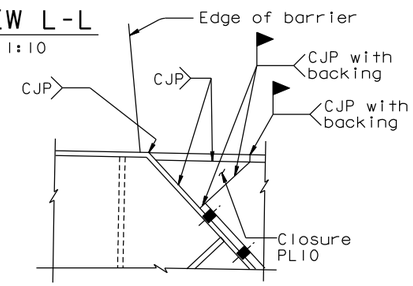

DETAIL A
1:5

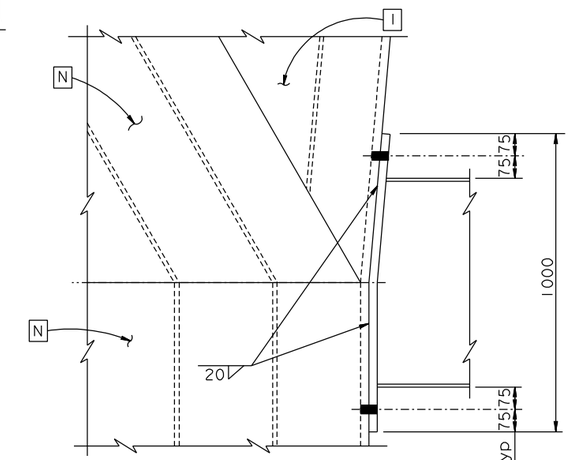

SECTION P-P
1:10

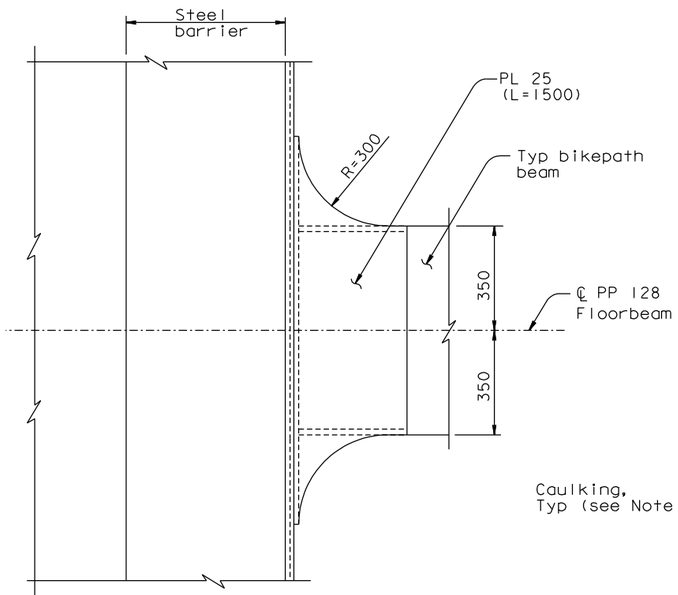

VIEW M-M
1:10

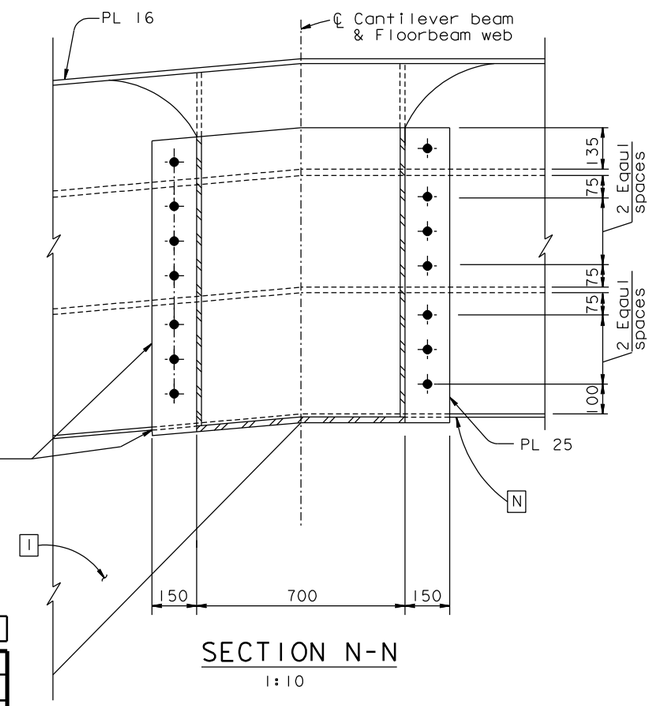

SECTION N-N
1:10

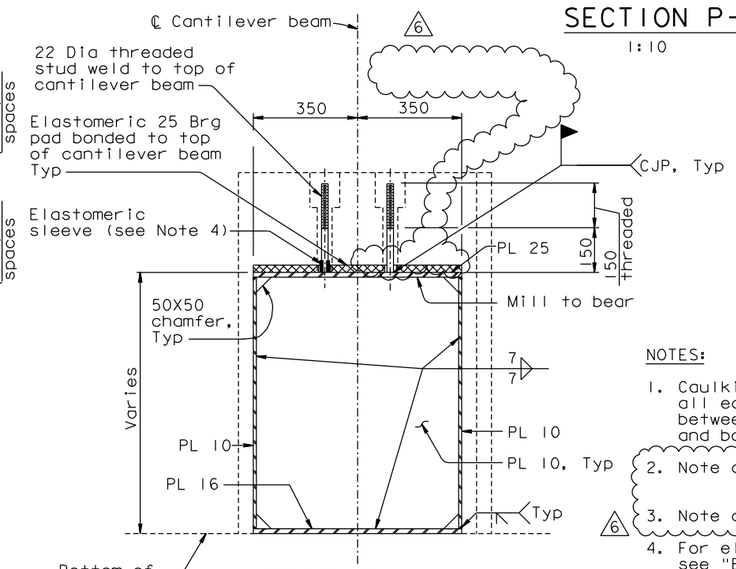

SECTION H-H
1:10

NOTES:

1. Caulking shall be provided along all edges of bolted connection between bikepath cantilever beam and box girder.
2. Note deleted.
3. Note deleted.
4. For elastomeric sleeve detail, see "Bikepath Details No. 4A" sheet.

CONTRACT CHANGE ORDER NO. ____
SHEET ___ OF ___

REQUESTS FOR INFORMATION NOT ADDRESSED IN THIS CCO REMAIN IN FORCE

MARK	DATE	DESCRIPTIONS	BY	CH'D	CCO#
6	08/10/11	BIKEPATH PAD REVISIONS	GB	TH	211
5	01/25/11	BIKEPATH STUD ISSUE	TH	CC	186
4	08/20/10	BIKEPATH DETAILS	TH	CC	99
3	09/25/09	BIKEPATH DETAILS	TH	HT	99
2	07/07/08	CAULKING	AS	TH	66
1	07/20/07	BIKEPATH BRACKETS	GB	TH	33

REVISIONS

ALL DIMENSIONS ARE IN MILLIMETERS UNLESS OTHERWISE SHOWN

R. Valizadeh/V. Toan/Y.L./W.L./F.C.
DESIGN OVERSIGHT
SIGN OFF DATE 08/10/11

	BY	CHECKED
DESIGN	T. Ho	T. McMeans
DETAILS	R. Xu	P. Ritchie
QUANTITIES	C. Bernardo	S. Shi

PREPARED FOR THE STATE OF CALIFORNIA DEPARTMENT OF TRANSPORTATION

R. Manzanarez
PROJECT ENGINEER

BRIDGE NO. 34-0006L/R
KILOMETER POST 13.2/13.9

SAN FRANCISCO OAKLAND BAY BRIDGE
EAST SPAN SEISMIC SAFETY PROJECT
SELF-ANCHORED SUSPENSION BRIDGE
(SUPERSTRUCTURE & TOWER)

BIKEPATH DETAILS NO. 14

Rev. Date: 5-18-98

ORIGINAL SCALE IN MILLIMETERS FOR REDUCED PLANS 0 10 20 30 40 50 60 70 80 90 100

CU 04
EA 0120F1

DISREGARD PRINTS BEARING EARLIER REVISION DATES

REVISION DATES (PRELIMINARY STAGE ONLY) 05/31/01 04/08/02 07/04/02 12/18/02 11/13/05

SHEET 421R6 OF

100% PS&E

DATE PLOTTED => 10 AUG 2011 TIME PLOTTED => 11:22:12

USERNAME => DWinrow

FILE => I:\bb\04-012001\sas\contract plans and cco\cco\cco#211\1-original 08-10-11\dgn\agbwd14.dgn

DIST.	COUNTY	ROUTE	KILOMETER POST TOTAL PROJECT	SHEET NO.	TOTAL SHEETS
04	SF	80	13.2/13.9	840SIR3	1204

REGISTERED ENGINEER - CIVIL

08-20-10

PLANS APPROVAL DATE

The State of California or its officers or agents shall not be responsible for the accuracy or completeness of electronic copies of this plan sheet.

REGISTERED PROFESSIONAL ENGINEER Marwan N. Nader No. C 054426 Exp. 12/31/11 CIVIL STATE OF CALIFORNIA

T.Y. LIN / MOFFATT & NICHOL
825 BATTERY STREET
SAN FRANCISCO, CA 94111

Caltrans now has a web site! To get to the web site, go to: http://www.dot.ca.gov

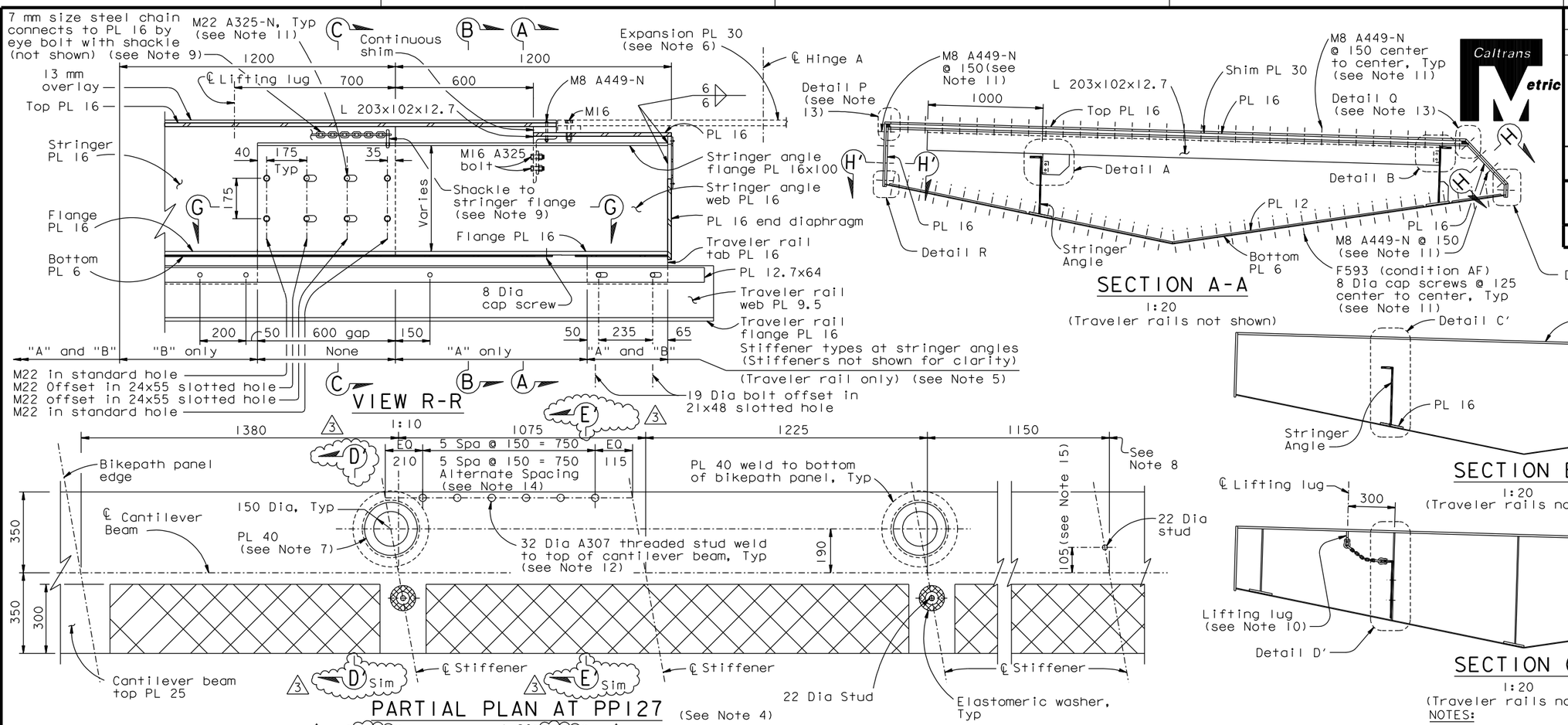

CONTRACT CHANGE ORDER NO. ____
SHEET ___ OF ___

REQUESTS FOR INFORMATION NOT ADDRESSED IN THIS CCO REMAIN IN FORCE

14. At the Contractor's option, the 25 dimension may be fabricated to 45 mm with an erection tolerance of ±20, and the alternate spacing shall be used.
15. At the Contractor's option, an erection tolerance of ±20 may be used.
16. At the Contractor's option, Alternate Partial Plan at PP128 may be used. See"Bikepath Details No.22" sheet.

ALL DIMENSIONS ARE IN MILLIMETERS UNLESS OTHERWISE SHOWN

NOTES:

1. For informatin not shown, see "Bikepath Details No.1" through "Bikepath Details No.4", "Bikepath Details No.13" and "E2/E3 Bikepath Traveler Rails" sheets.
2. For Sections D-D, E-E & N-N, see "Bikepath Details No.18" sheet.
3. For Sections G-G & H-H and Details A, B, C & D, see "Bikepath Details No.19" sheet.
4. Provide tie down studs per " Bikepath Details No.4" sheet.
5. For stringer angle stiffeners at traveler rails see "Bikepath Details No.19" sheet.
6. For Details not shown, see "Bikepath Details No.15" and "Bikepath Details No.15A" sheets.
7. 3 mm HDPE epoxy bonded to top of PL 40.
8. Stiffener plate spacing are shown for information only. Stiffener plate spacing to match bikepath stringer spacing.
9. Eyebolts, shackles and chains shall be hot-dipped galvanized and have a working load capacity of 16 kN.
10. For lifting lug details, see "Tower Access Details No.9" sheet.
11. Bolts shall be installed with threads included in the shear plane.
12. ASTM A108 Grade C1018, with mechanical properties conforming to that of Type B Studs in AWS D1.1 Table 7.1, may be used in lieu of ASTM A307.
13. For Details P, Q, R & S, see "Bikepath Details No.20" sheet.

MARK	DATE	DESCRIPTIONS	BY	CH'D	CCO#
3	08/10/11	BIKEPATH PAD REVISIONS	GB	TH	211
2	03/04/11	BIKEPATH DETAILS	RB	MN	99
1	02/04/11	BIKEPATH STUD ISSUE	CC	MN	186
0	08/20/10	BIKEPATH DETAILS	RB	MN	99

REVISIONS

R. Valizadeh/V. Toan/Y.L./W.L./F.C.
DESIGN OVERSIGHT
Roya Valizadeh / Vong Toan / Y. Liu
SIGN OFF DATE 08/10/11

DESIGN	BY G. Baker	CHECKED M. Nader	
DETAILS	BY R. Boundouki	CHECKED M. Benoit	
QUANTITIES	BY R. Boundouki	CHECKED A. Baumberger	

PREPARED FOR THE STATE OF CALIFORNIA DEPARTMENT OF TRANSPORTATION

R. Manzanarez
PROJECT ENGINEER

BRIDGE NO. 34-0006L/R
KILOMETER POST 13.2/13.9

SAN FRANCISCO OAKLAND BAY BRIDGE
EAST SPAN SEISMIC SAFETY PROJECT
SELF-ANCHORED SUSPENSION BRIDGE
(SUPERSTRUCTURE & TOWER)

BIKEPATH DETAILS NO. 17

Rev. Date: 5-18-98

ORIGINAL SCALE IN MILLIMETERS FOR REDUCED PLANS 0 10 20 30 40 50 60 70 80 90 100

CU 04
EA 0120F1

DISREGARD PRINTS BEARING EARLIER REVISION DATES

REVISION DATES (PRELIMINARY STAGE ONLY) 08/20/10

SHEET 423SIR3 OF

FILE => I:\bb\04-012001\sas\contract plans and cco\cco\cco#211\1-original 08-10-11\dgn\agbwd16a.dgn

USERNAME => DWinrow DATE PLOTTED => 10 AUG 2011 TIME PLOTTED => 11:23:07

100% PS&E

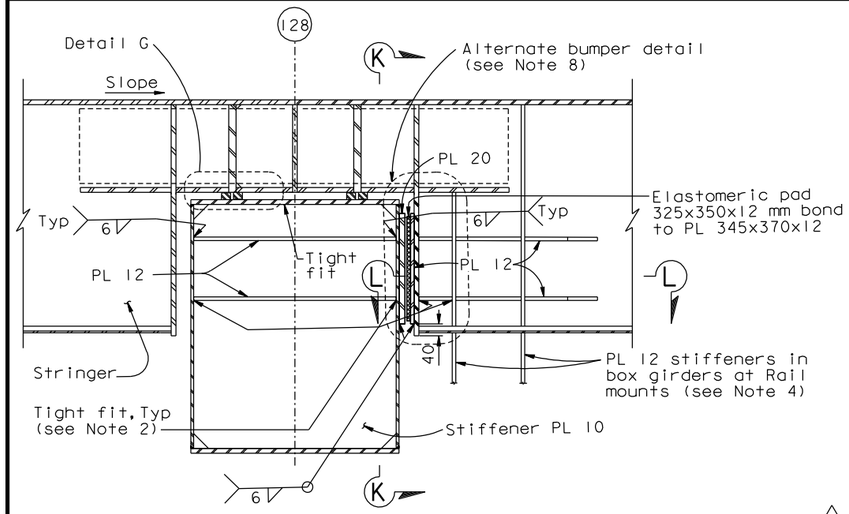

SECTION D-D (Section D'-D' similar)

1:10

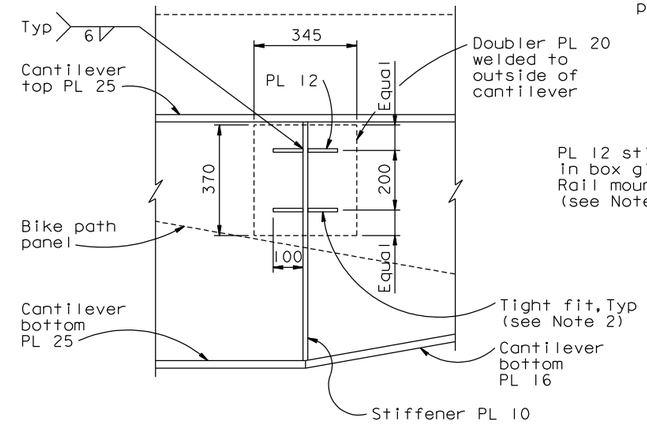

SECTION K-K

1:10

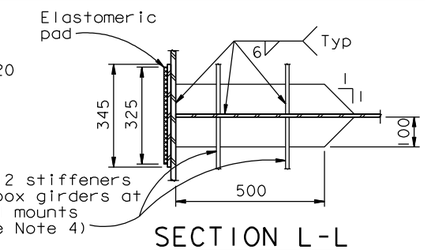

SECTION L-L

1:10

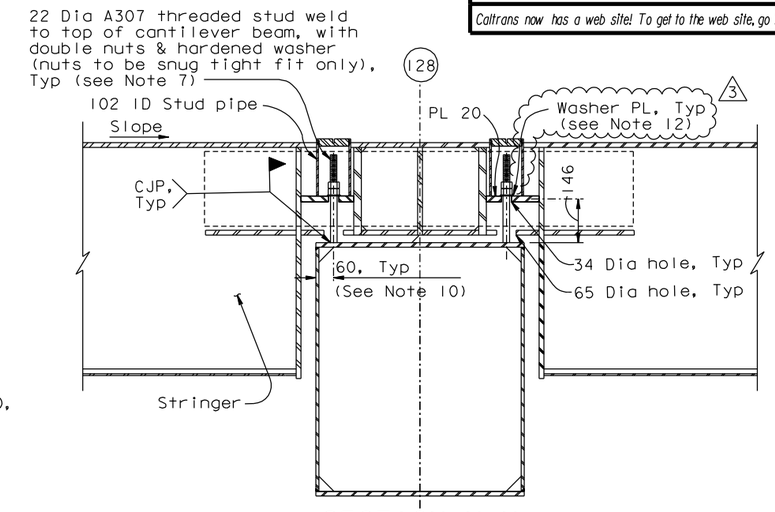

SECTION N-N (See Note 3)

1:10

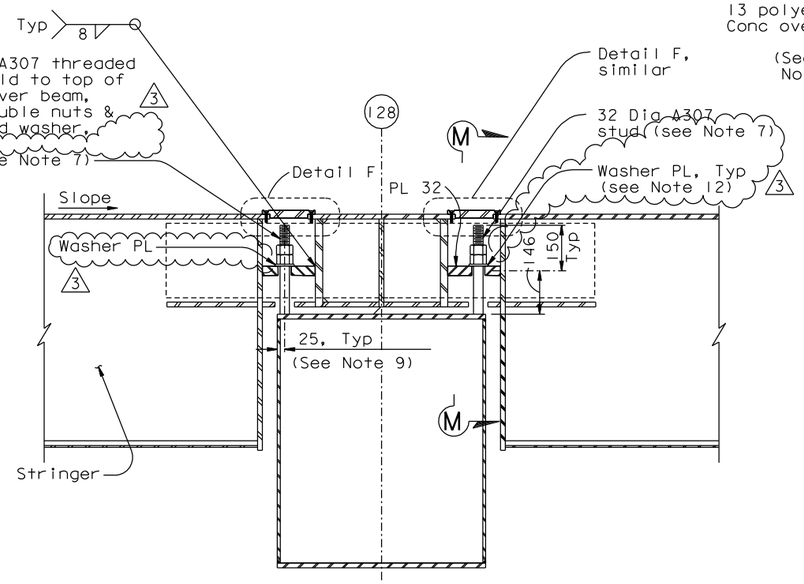

SECTION E-E (Section E'-E' similar)

1:10

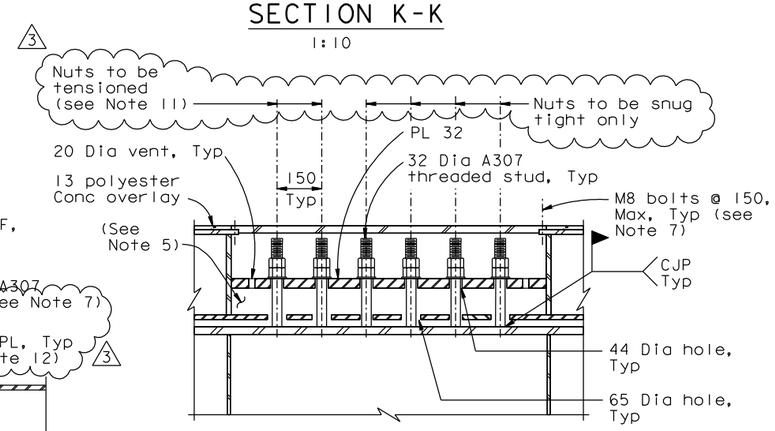

SECTION M-M

1:10

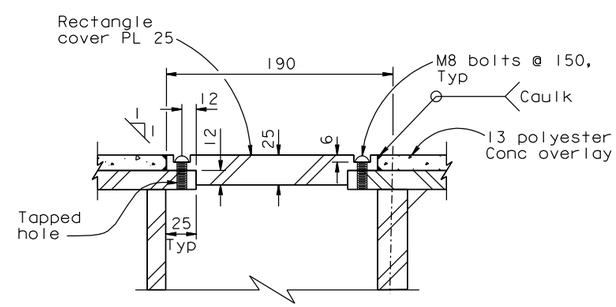

DETAIL F

1:2.5

CONTRACT CHANGE ORDER NO. _____
SHEET ____ OF ____

REQUESTS FOR INFORMATION NOT ADDRESSED IN THIS CCO REMAIN IN FORCE

MARK	DATE	DESCRIPTIONS	BY	CH'D	CCO#
3	08/10/11	BIKEPATH PAD REVISIONS	GB	TH	211
2	03/04/11	BIKEPATH DETAILS	CC	MN	99
1	02/04/11	BIKEPATH STUD ISSUE	CC	MN	186
0	08/20/10	BIKEPATH DETAILS	RB	MN	99

REVISIONS

R. Valizadeh/V. Toan/Y.L./W.L./F.C.
DESIGN OVERSIGHT
Y. Liu
SIGN OFF DATE 08/10/11

	BY	CHECKED
DESIGN	G. Baker	M. Nader
DETAILS	R. Boundouki	M. Benoit
QUANTITIES	R. Boundouki	A. Baumberger

PREPARED FOR THE STATE OF CALIFORNIA DEPARTMENT OF TRANSPORTATION

R. Manzanarez
PROJECT ENGINEER

BRIDGE NO. 34-0006L/R
KILOMETER POST 13.2/13.9

ALL DIMENSIONS ARE IN MILLIMETERS UNLESS OTHERWISE SHOWN

Rev. Date: 5-18-98

ORIGINAL SCALE IN MILLIMETERS FOR REDUCED PLANS 0 10 20 30 40 50 60 70 80 90 100

CU 04
EA 0120F1

DISREGARD PRINTS BEARING EARLIER REVISION DATES 08/20/10

Caltrans Metric

DIST.	COUNTY	ROUTE	KILOMETER POST TOTAL PROJECT	SHEET NO.	TOTAL SHEETS
04	SF	80	13.2/13.9	840S2R3	1204

REGISTERED ENGINEER - CIVIL
08-20-10
PLANS APPROVAL DATE

REGISTERED PROFESSIONAL ENGINEER Marwan N. Nader No. C 054426 Exp. 12/31/11 CIVIL STATE OF CALIFORNIA

The State of California or its officers or agents shall not be responsible for the accuracy or completeness of electronic copies of this plan sheet.

T.Y. LIN / MOFFATT & NICHOL
825 BATTERY STREET
SAN FRANCISCO, CA 94111

Caltrans now has a web site! To get to the web site, go to: http://www.dot.ca.gov

SAN FRANCISCO OAKLAND BAY BRIDGE
EAST SPAN SEISMIC SAFETY PROJECT
SELF-ANCHORED SUSPENSION BRIDGE
(SUPERSTRUCTURE & TOWER)

BIKEPATH DETAILS NO. 18

REVISION DATES (PRELIMINARY STAGE ONLY) 08/20/10

SHEET 432S2R3 OF

FILE => I:\bb\04-012001\sas\contract plans and cco\cco\cco#211\1-original 08-10-11\dgn\agbwd16b.dgn

USERNAME => DWinrow DATE PLOTTED => 10 AUG 2011 TIME PLOTTED => 11:23:49

100 % PS&E

NOTES:

1. For information not shown, see "Bikepath Details No.1 through "Bikepath Details No.4", "Bikepath Details No.13" and "E2/E3 Bikepath Traveler Rails" sheets.
2. Plate shall be tight-fit prior to welding.
3. For Details not shown, see Section H-H on "Bikepath Details No.14" sheet.
4. For information not shown, see "E2/E3 Bikepath Traveler Rails-03" sheet.
5. After installation of bikepath panel, fill space with expandable polyurethane foam filler.
6. For Detail G, see "Bikepath Details No.19" sheet.
7. ASTM A108 Grade C1018, with mechanical properties conforming to that of Type B Studs in AWS D1.1 Table 7.1, may be used in lieu of ASTM A307.
8. At the Contractor's option, the alternate bumper detail may be used, see "Bikepath Details No.21" sheet.
9. At the Contractor's option, the 25 dimension may be fabricated to 45 mm with an erection tolerance of ±20.
10. At the Contractor's option, an erection tolerance of ±20 may be used. (3)
11. Nuts on the east end of each bikepath panel shall be tightened prior to load transfer to provide 0.5 Fy tension in the studs. Nuts on the west end of each bikepath panel shall be tightened after load transfer to provide 0.5 Fy tension in the studs. Tightening shall be performed using a calibrated turn of the nut method.
12. For washer plate details, see "Bikepath Details No.4A" sheet.