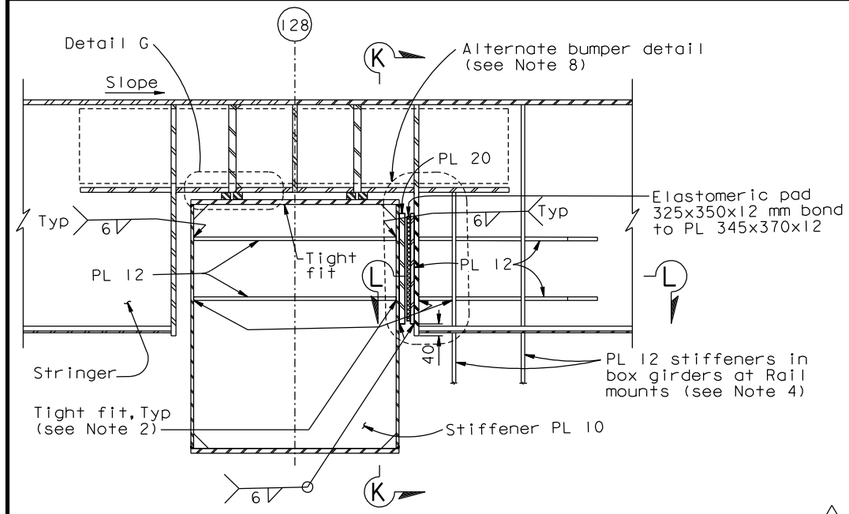

SECTION D-D (Section D'-D' similar)

1:10

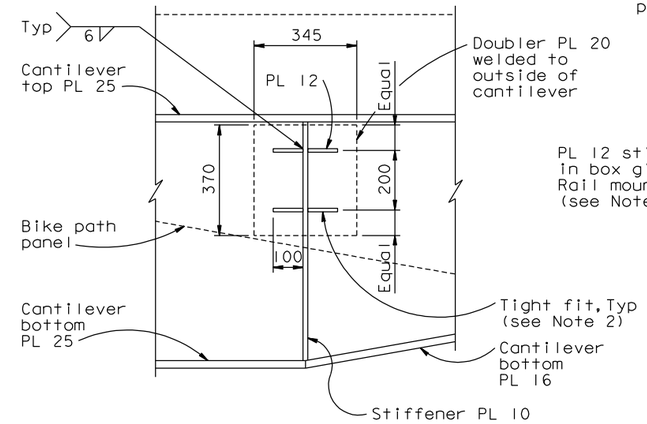

SECTION K-K

1:10

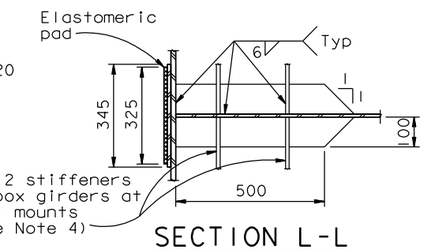

SECTION L-L

1:10

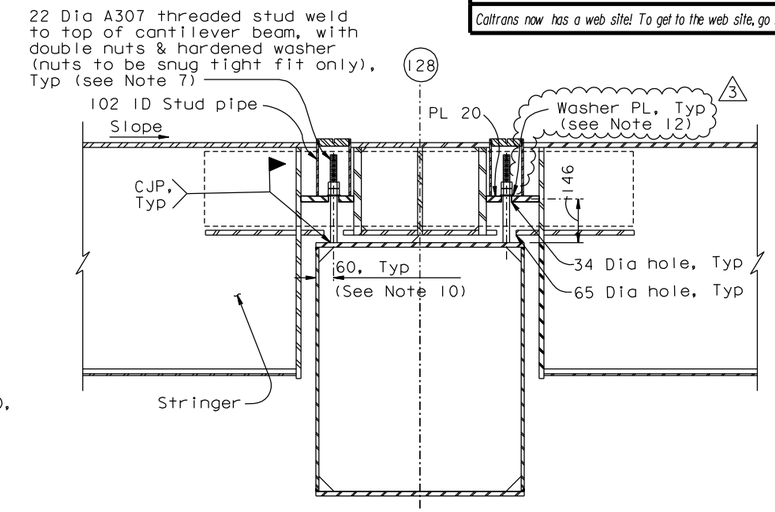

SECTION N-N (See Note 3)

1:10

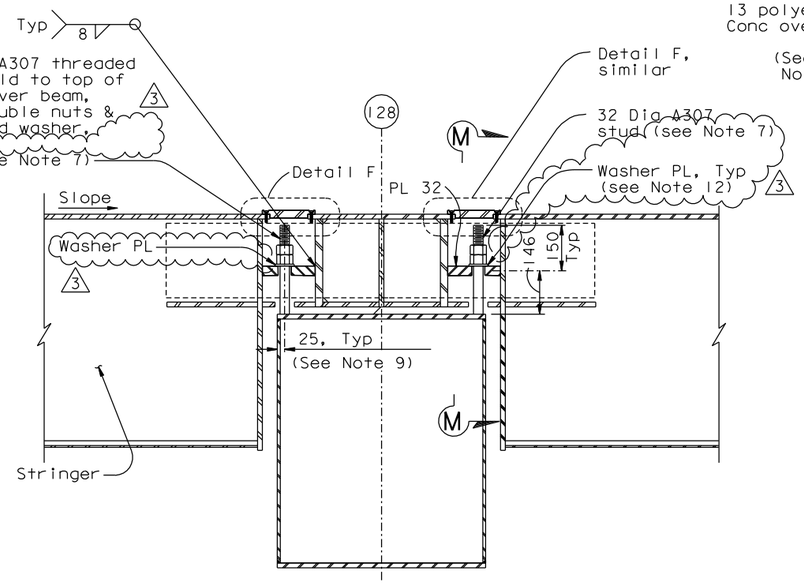

SECTION E-E (Section E'-E' similar)

1:10

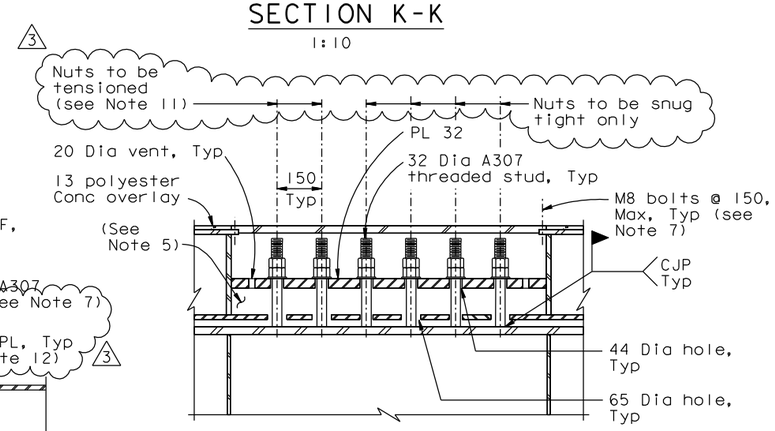

SECTION M-M

1:10

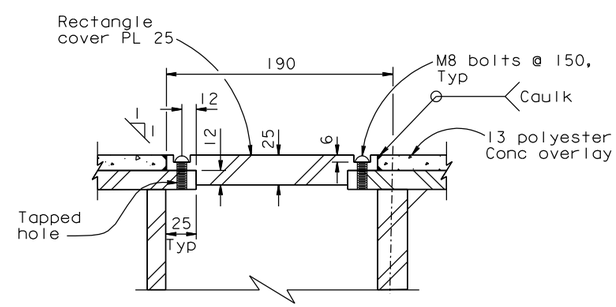

DETAIL F

1:2.5

CONTRACT CHANGE ORDER NO. _____
SHEET ____ OF ____

REQUESTS FOR INFORMATION NOT ADDRESSED IN THIS CCO REMAIN IN FORCE

MARK	DATE	DESCRIPTIONS	BY	CH'D	CCO#
3	08/10/11	BIKEPATH PAD REVISIONS	GB	TH	211
2	03/04/11	BIKEPATH DETAILS	CC	MN	99
1	02/04/11	BIKEPATH STUD ISSUE	CC	MN	186
0	08/20/10	BIKEPATH DETAILS	RB	MN	99

REVISIONS

R. Valizadeh/V. Toan/Y.L./W.L./F.C.
DESIGN OVERSIGHT
Y. Liu
SIGN OFF DATE 08/10/11

	BY	CHECKED
DESIGN	G. Baker	M. Nader
DETAILS	R. Boundouki	M. Benoit
QUANTITIES	R. Boundouki	A. Baumberger

PREPARED FOR THE STATE OF CALIFORNIA DEPARTMENT OF TRANSPORTATION

R. Manzanarez
PROJECT ENGINEER

BRIDGE NO. 34-0006L/R
KILOMETER POST 13.2/13.9

ALL DIMENSIONS ARE IN MILLIMETERS UNLESS OTHERWISE SHOWN

Rev. Date: 5-18-98

ORIGINAL SCALE IN MILLIMETERS FOR REDUCED PLANS 0 10 20 30 40 50 60 70 80 90 100

CU 04
EA 0120F1

DISREGARD PRINTS BEARING EARLIER REVISION DATES 08/20/10

Caltrans Metric

DIST.	COUNTY	ROUTE	KILOMETER POST TOTAL PROJECT	SHEET NO.	TOTAL SHEETS
04	SF	80	13.2/13.9	840S2R3	1204

REGISTERED ENGINEER - CIVIL
08-20-10
PLANS APPROVAL DATE

REGISTERED PROFESSIONAL ENGINEER Marwan N. Nader No. C 054426 Exp. 12/31/11 CIVIL STATE OF CALIFORNIA

The State of California or its officers or agents shall not be responsible for the accuracy or completeness of electronic copies of this plan sheet.

T.Y. LIN / MOFFATT & NICHOL
825 BATTERY STREET
SAN FRANCISCO, CA 94111

Caltrans now has a web site! To get to the web site, go to: http://www.dot.ca.gov

SAN FRANCISCO OAKLAND BAY BRIDGE
EAST SPAN SEISMIC SAFETY PROJECT
SELF-ANCHORED SUSPENSION BRIDGE
(SUPERSTRUCTURE & TOWER)

BIKEPATH DETAILS NO. 18

REVISION DATES (PRELIMINARY STAGE ONLY) 08/20/10

SHEET 432S2R3 OF

FILE => I:\bb\04-012001\sas\contract plans and cco\cco\cco#211\1-original 08-10-11\dgn\agbwd16b.dgn

USERNAME => DWinrow DATE PLOTTED => 10 AUG 2011 TIME PLOTTED => 11:23:49

100 % PS&E

NOTES:

1. For information not shown, see "Bikepath Details No.1 through "Bikepath Details No.4", "Bikepath Details No.13" and "E2/E3 Bikepath Traveler Rails" sheets.
2. Plate shall be tight-fit prior to welding.
3. For Details not shown, see Section H-H on "Bikepath Details No.14" sheet.
4. For information not shown, see "E2/E3 Bikepath Traveler Rails-03" sheet.
5. After installation of bikepath panel, fill space with expandable polyurethane foam filler.
6. For Detail G, see "Bikepath Details No.19" sheet.
7. ASTM A108 Grade C1018, with mechanical properties conforming to that of Type B Studs in AWS D1.1 Table 7.1, may be used in lieu of ASTM A307.
8. At the Contractor's option, the alternate bumper detail may be used, see "Bikepath Details No.21" sheet.
9. At the Contractor's option, the 25 dimension may be fabricated to 45 mm with an erection tolerance of ±20.
10. At the Contractor's option, an erection tolerance of ±20 may be used. (3)
11. Nuts on the east end of each bikepath panel shall be tightened prior to load transfer to provide 0.5 Fy tension in the studs. Nuts on the west end of each bikepath panel shall be tightened after load transfer to provide 0.5 Fy tension in the studs. Tightening shall be performed using a calibrated turn of the nut method.
12. For washer plate details, see "Bikepath Details No.4A" sheet.