DIST.	COUNTY	ROUTE	KILOMETER POST TOTAL PROJECT	SHEET NO.	TOTAL SHEETS
04	SF	80	13.2/13.9	828SIR2	1204

Caltrans Metric

REGISTERED ENGINEER - CIVIL

08-20-10
PLANS APPROVAL DATE

REGISTERED PROFESSIONAL ENGINEER Tien Hung Ho No. C 43990 Exp. 06/30/13 CIVIL STATE OF CALIFORNIA

The State of California or its officers or agents shall not be responsible for the accuracy or completeness of electronic copies of this plan sheet.

T.Y. LIN / MOFFATT & NICHOL
825 BATTERY STREET
SAN FRANCISCO, CA 94111

Caltrans now has a web site! To get to the web site, go to: http://www.dot.ca.gov

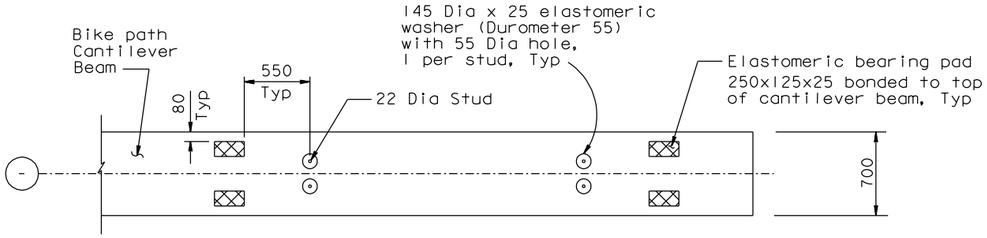

(PP5-PP115, PP123-PP127)

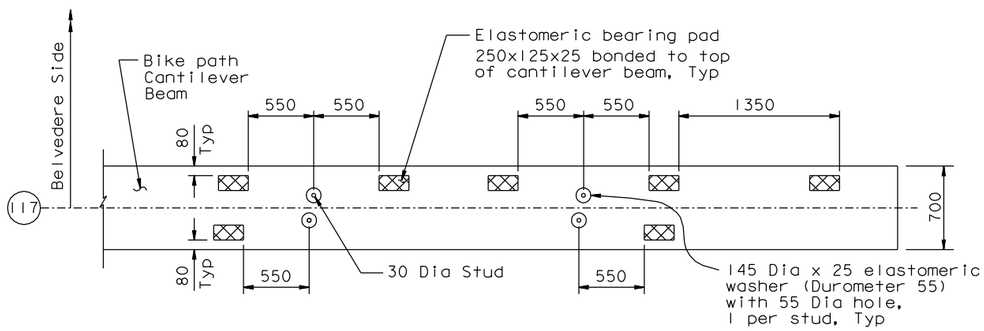

(PP117 SHOWN, PP121 OPPOSITE)

ALTERNATE ELASTOMERIC BEARING PAD

1:25

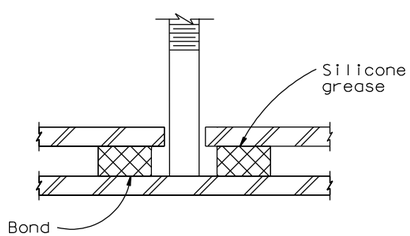

ELASTOMERIC WASHER DETAIL

1:2.5

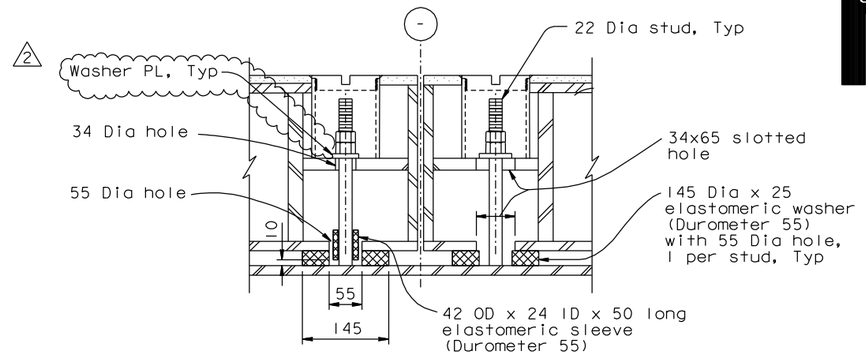

(PP5-PP115, PP123-PP127)

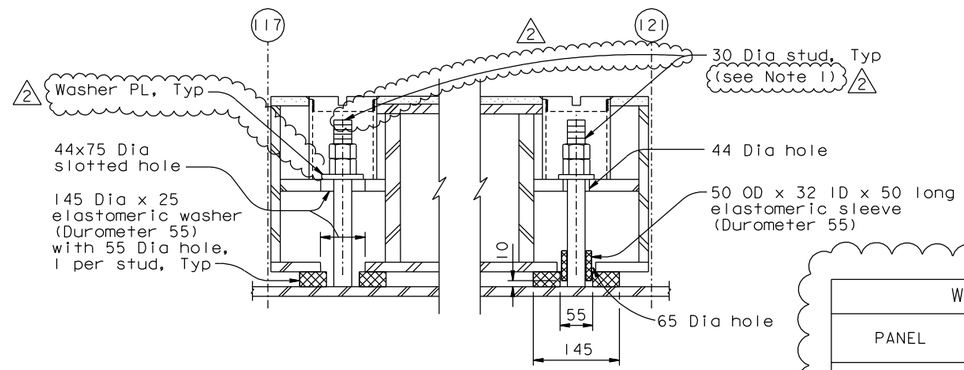

(PP117-PP121)

1:5

ELASTOMERIC SLEEVE DETAIL

1:5

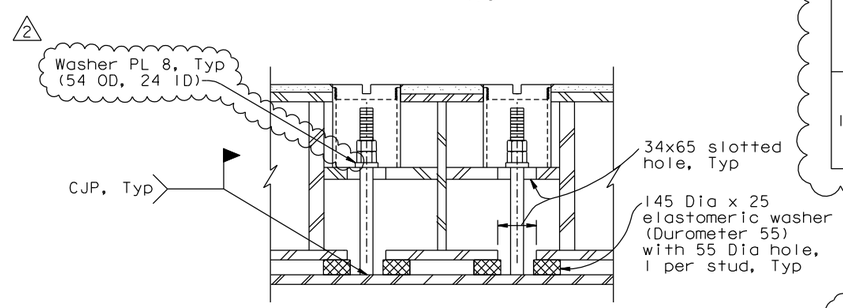

SECTION F-F

1:5

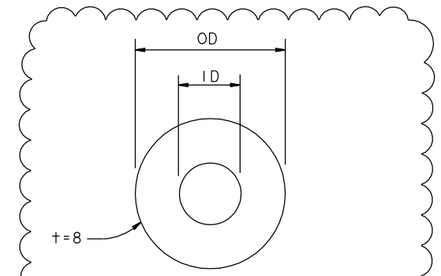

WASHER PLATE DETAIL

NTS

WASHER PLATE DIMENSIONS

PANEL	END	OD	ID
5 - 117, 121 - 127	EAST	44	24
	WEST	54	24
117 - 127 (BELVEDERE PANEL)	EAST	60	33
	WEST	70	33
127 - HINGE A ℄	PP 127	60	35
	PP 128	60	35

NOTES:

1. Nuts on the east end of each bikepath panel shall be tightened prior to load transfer to provide 0.5 Fy tension in the studs. Nuts on the west end of each bikepath panel shall be tightened after load transfer to provide 0.5 Fy tension in the studs. Tightening shall be performed by using a calibrated turn of the nut method.

CONTRACT CHANGE ORDER NO. _____
SHEET ____ OF ____

REQUESTS FOR INFORMATION NOT ADDRESSED IN THIS CCO REMAIN IN FORCE

MARK	DATE	DESCRIPTIONS	BY	CH'D	CCO#
2	08/10/11	BIKEPATH PAD REVISIONS	GB	TH	211
1	01/25/11	BIKEPATH STUD ISSUE	TH	CC	186
0	08/20/10	BIKEPATH DETAILS	CC	TH	99

REVISIONS

R. Valizadeh/V. Toan/Y.L./W.L./F.C.
DESIGN OVERSIGHT
SIGN OFF DATE 08/10/11

	BY	CHECKED
DESIGN	C. Choi	T. Ho
DETAILS	C. Choi	T. Ho
QUANTITIES	C. Choi	T. Ho

PREPARED FOR THE STATE OF CALIFORNIA DEPARTMENT OF TRANSPORTATION

ALL DIMENSIONS ARE IN MILLIMETERS UNLESS OTHERWISE SHOWN

R. Manzanarez
PROJECT ENGINEER

BRIDGE NO. 34-0006L/R
KILOMETER POST 13.2/13.9

SAN FRANCISCO OAKLAND BAY BRIDGE
EAST SPAN SEISMIC SAFETY PROJECT
SELF-ANCHORED SUSPENSION BRIDGE
(SUPERSTRUCTURE & TOWER)

BIKEPATH DETAILS NO. 4A

Rev. Date: 5-18-98

ORIGINAL SCALE IN MILLIMETERS FOR REDUCED PLANS 0 10 20 30 40 50 60 70 80 90 100

CU 04
EA 0120F1

DISREGARD PRINTS BEARING EARLIER REVISION DATES 08/20/10

REVISION DATES (PRELIMINARY STAGE ONLY)

SHEET 411SIR2 OF

FILE => I:\bb\04-012001\sas\contract plans and cco\cco\cco=211\1-original 08-10-11\dgn\agbwd04a.dgn

USERNAME => DWinrow DATE PLOTTED => 10 AUG 2011 TIME PLOTTED => 11:03:25

100 % PS&E