DIST.	COUNTY	ROUTE	KILOMETER POST TOTAL PROJECT	SHEET NO.	TOTAL SHEETS
04	SF	80	13.2/13.9	832R5	1204

REGISTERED ENGINEER - CIVIL

12-06-04
PLANS APPROVAL DATE

The State of California or its officers or agents shall not be responsible for the accuracy or completeness of electronic copies of this plan sheet.

REGISTERED PROFESSIONAL ENGINEER Tien Hung Ho No. C 43990 Exp. 6/30/13 CIVIL STATE OF CALIFORNIA

T.Y. LIN / MOFFATT & NICHOL
825 BATTERY STREET
SAN FRANCISCO, CA 94111

Caltrans now has a web site! To get to the web site, go to: http://www.dot.ca.gov

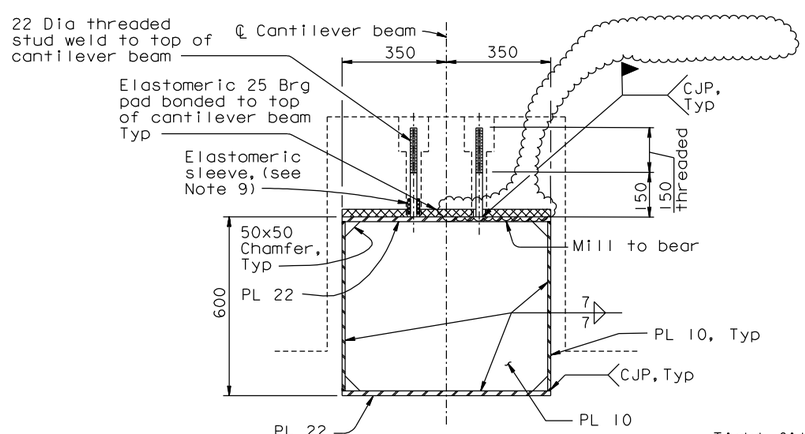

SECTION C-C
1:10

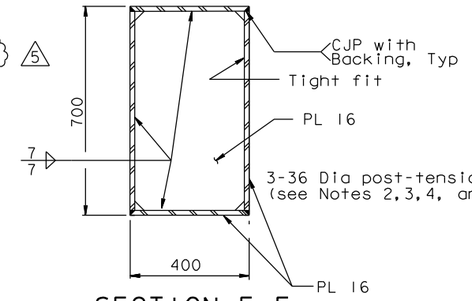

SECTION E-E
1:10

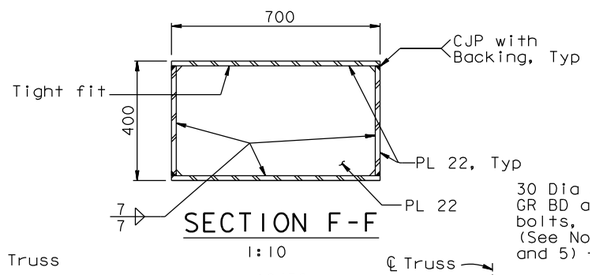

SECTION F-F
1:10

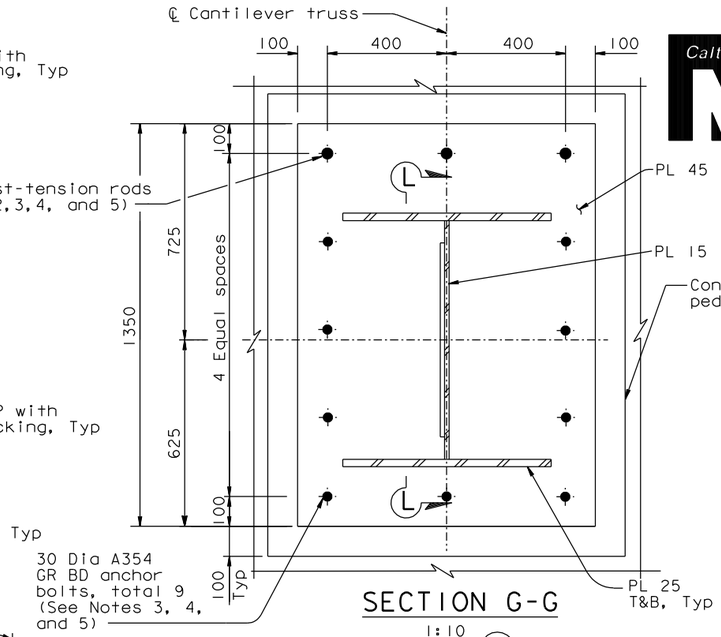

SECTION G-G
1:10

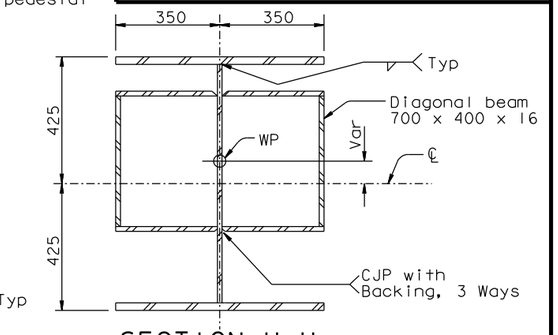

SECTION H-H
1:10

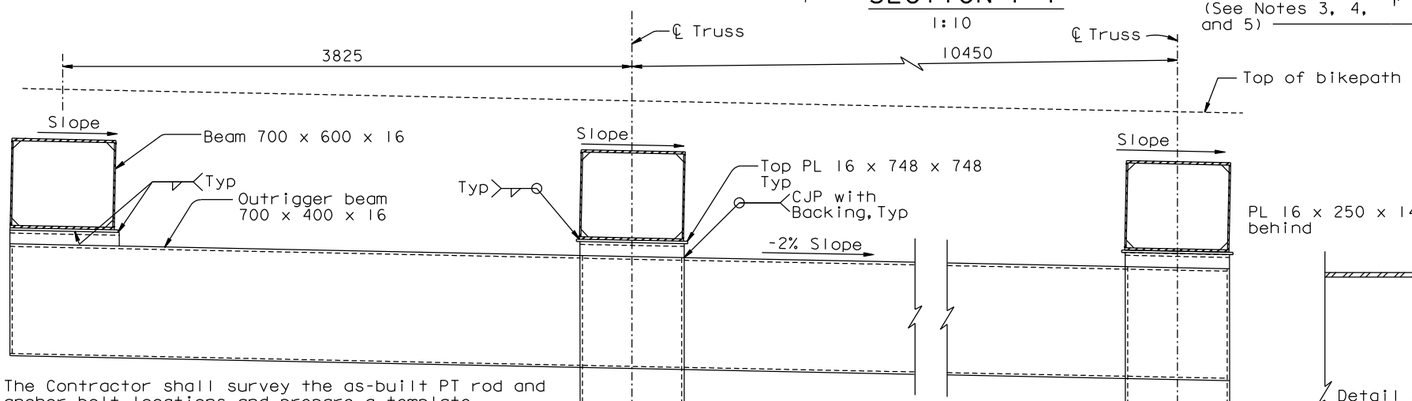

4. The Contractor shall survey the as-built PT rod and anchor bolt locations and prepare a template. This template shall be trial fit in the field prior to drilling the holes in the base plate.
5. The Contractor shall furnish all PT and anchor bolt components, and shall provide corrosion protection covering exposed ends.
6. For details not shown, see "Bikepath Details No.17, 18 & 19" sheets.
7. Note deleted.
8. Note deleted.
9. For elastomeric sleeve detail, see "Bikepath Details No.4A" sheet.

SECTION D-D
1:20

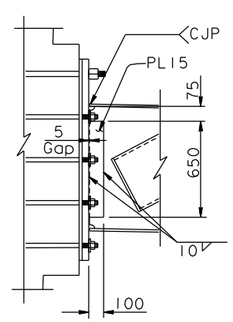

SECTION L-L
1:20

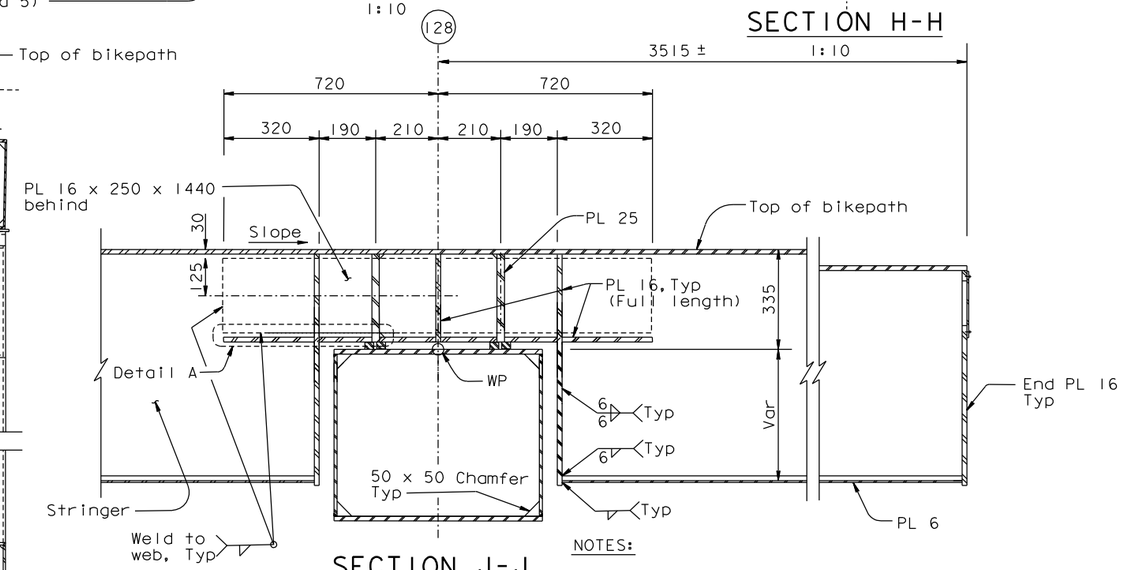

SECTION J-J
1:10
(See Note 6)

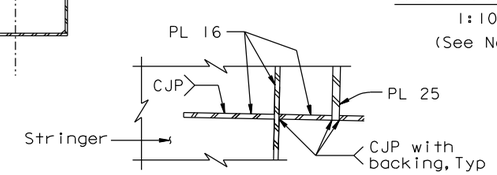

DETAIL A
1:10

NOTES:

1. For Detail D, see "Bikepath Details No.5" sheet.
2. PT rods are ASTM A722 high strength 36 Dia rods (Fu=1030 MPa), with standard galvanized steel ducts, unless specified otherwise. The jacking force of 734 KN to be applied by Others. The Contractor may substitute the PT duct with a PT supplier recommended debonding tape, subject to review and approval of the Engineer. If the PT duct substitution is approved by the Engineer, the spherical nut inside the W2 cap beam is not required.
3. The tolerance for placement of the PT rods and anchor bolts is ±25 mm.

ALL DIMENSIONS ARE IN MILLIMETERS UNLESS OTHERWISE SHOWN

CONTRACT CHANGE ORDER NO. _____
SHEET ____ OF ____

REQUESTS FOR INFORMATION NOT ADDRESSED IN THIS CCO REMAIN IN FORCE

MARK	DATE	DESCRIPTIONS	BY	CH'D	CCO#
5	08/10/11	BIKEPATH PAD REVISIONS	GB	TH	211
4	03/04/11	BIKEPATH DETAILS	TH	CC	99
3	01/25/11	BIKEPATH STUD ISSUE	TH	CC	186
2	08/20/10	BIKEPATH DETAILS	TH	CC	99
1	05/04/07	W2 CAP BEAM ISD RESOLUTION	JD	TH	34SI

REVISIONS

R. Valizadeh/V. Toan/Y.L./W.L./F.C.
DESIGN OVERSIGHT
SIGN OFF DATE 08/10/11

	BY	CHECKED
DESIGN	T. Ho	T. McMeans
DETAILS	R. Xu	P. Ritchie
QUANTITIES	C. Bernardo	S. Shi

PREPARED FOR THE STATE OF CALIFORNIA DEPARTMENT OF TRANSPORTATION

R. Manzanarez
PROJECT ENGINEER

BRIDGE NO. 34-0006L/R
KILOMETER POST 13.2/13.9

SAN FRANCISCO OAKLAND BAY BRIDGE
EAST SPAN SEISMIC SAFETY PROJECT
SELF-ANCHORED SUSPENSION BRIDGE
(SUPERSTRUCTURE & TOWER)

BIKEPATH DETAILS NO.8

Rev. Date: 5-18-98

ORIGINAL SCALE IN MILLIMETERS FOR REDUCED PLANS 0 10 20 30 40 50 60 70 80 90 100

CU 04
EA 0120F1

DISREGARD PRINTS BEARING EARLIER REVISION DATES

REVISION DATES (PRELIMINARY STAGE ONLY) 05/31/01 04/08/02 07/01/02 12/18/02 11/13/05

SHEET 415R5 OF

FILE => I:\bb\04-012001\sas\contract plans and cco\cco\cco#211\1-original 08-10-11\dgn\agbwd08.dgn

USERNAME => DWinrow DATE PLOTTED => 10 AUG 2011 TIME PLOTTED => 11:04:25

100 % PS&E