DIST.	COUNTY	ROUTE	KILOMETER POST TOTAL PROJECT	SHEET NO.	TOTAL SHEETS
04	SF	80	13.2/13.9	828SIR3	1204

Caltrans Metric

REGISTERED ENGINEER - CIVIL

08-20-10
PLANS APPROVAL DATE

REGISTERED PROFESSIONAL ENGINEER Tien Hung Ho No. C 43990 Exp. 06/30/13 CIVIL STATE OF CALIFORNIA

The State of California or its officers or agents shall not be responsible for the accuracy or completeness of electronic copies of this plan sheet.

T.Y. LIN / MOFFATT & NICHOL
825 BATTERY STREET
SAN FRANCISCO, CA 94111

Caltrans now has a web site! To get to the web site, go to: http://www.dot.ca.gov

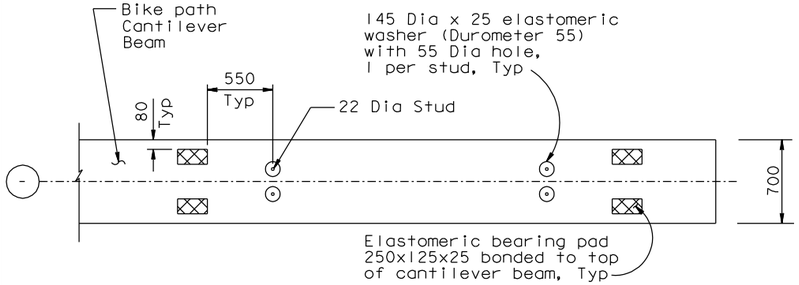

(PP5-PP115, PP123-PP127)

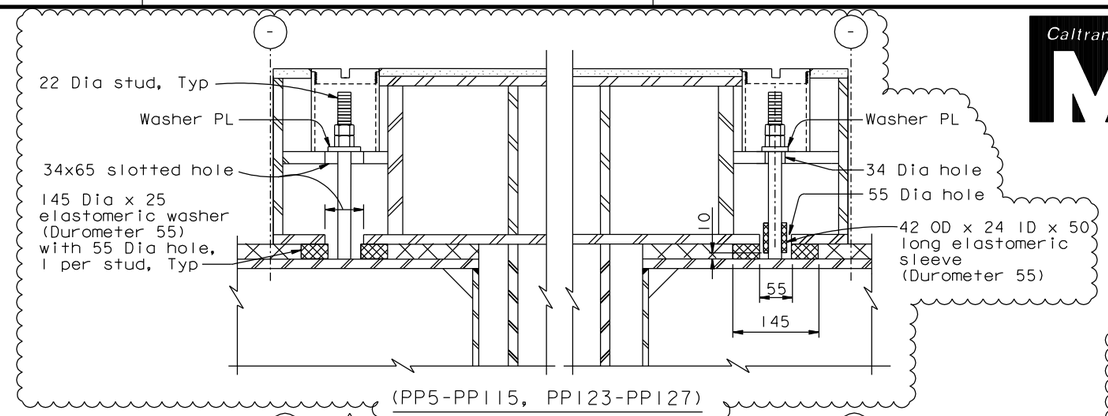

(PP5-PP115, PP123-PP127)

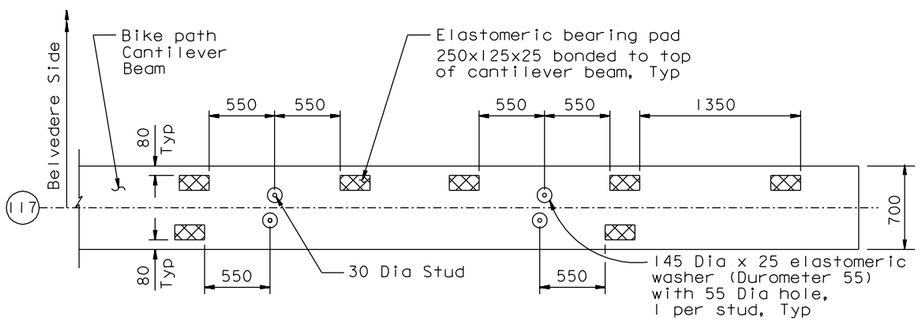

(PP117 SHOWN, PP121 OPPOSITE)

ALTERNATE ELASTOMERIC BEARING PAD

1:25

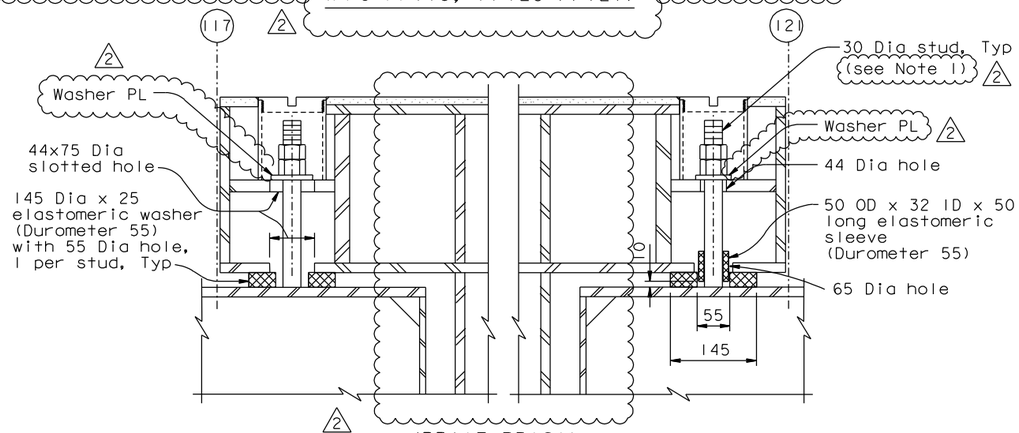

(PP117-PP121)

1:5

ELASTOMERIC SLEEVE DETAIL

1:5

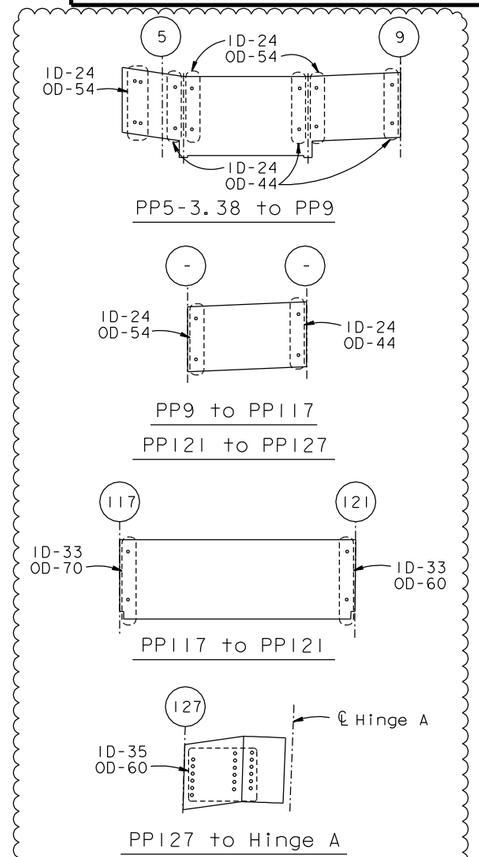

WASHER PLATE KEY PLAN

NTS

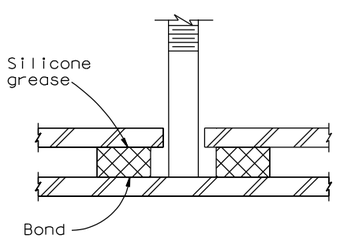

ELASTOMERIC WASHER DETAIL

1:2.5

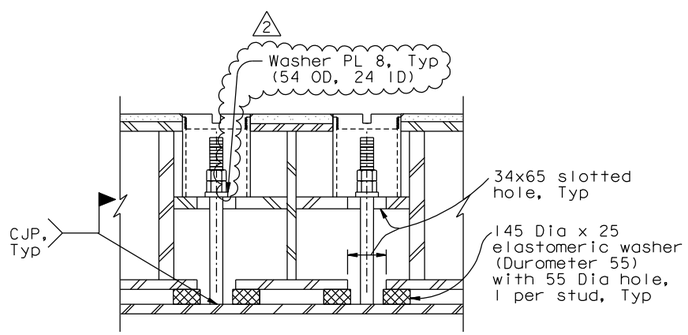

SECTION F-F

1:5

(At Bikepath Pier W2 simple support beam. Erection by Others)

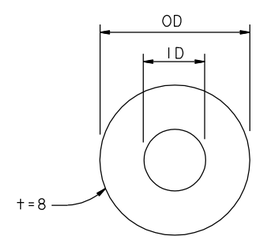

WASHER PLATE DETAIL

NTS

(For ID & OD, see Washer Plate Key Plan)

NOTES:

1. Nuts on the bikepath panel shall be tightened to provide 0.5 Fy tension in the studs. Tightening shall be performed by using a calibrated turn of the nut method or as otherwise approved by the Engineer.

CONTRACT CHANGE ORDER NO. _____
SHEET ____ OF ____

REQUESTS FOR INFORMATION NOT ADDRESSED IN THIS CCO REMAIN IN FORCE

MARK	DATE	DESCRIPTIONS	BY	CH'D	CCO#
3	07/19/12	BIKEPATH PAD REVISIONS	HT	TH	211
2	09/09/11	BIKEPATH PAD REVISIONS	GB	TH	211
1	01/25/11	BIKEPATH STUD ISSUE	TH	CC	186
0	08/20/10	BIKEPATH DETAILS	CC	TH	99

REVISIONS

ALL DIMENSIONS ARE IN MILLIMETERS UNLESS OTHERWISE SHOWN

R. Valizadeh/V. Toan/Y.L./W.L./F.C.
DESIGN OVERSIGHT
SIGN OFF DATE 07/19/12

	BY	CHECKED
DESIGN	C. Choi	T. Ho
DETAILS	C. Choi	T. Ho
QUANTITIES	C. Choi	T. Ho

PREPARED FOR THE STATE OF CALIFORNIA DEPARTMENT OF TRANSPORTATION

R. Manzanarez
PROJECT ENGINEER

BRIDGE NO. 34-0006L/R
KILOMETER POST 13.2/13.9

SAN FRANCISCO OAKLAND BAY BRIDGE
EAST SPAN SEISMIC SAFETY PROJECT
SELF-ANCHORED SUSPENSION BRIDGE
(SUPERSTRUCTURE & TOWER)

BIKEPATH DETAILS NO. 4A

Rev. Date: 5-18-98

ORIGINAL SCALE IN MILLIMETERS FOR REDUCED PLANS 0 10 20 30 40 50 60 70 80 90 100

CU 04
EA 0120F1

DISREGARD PRINTS BEARING EARLIER REVISION DATES

REVISION DATES (PRELIMINARY STAGE ONLY) 08/20/10

SHEET 411SIR3 OF

FILE => I:\bb\04-012001\sas\contract plans and cco\cco\cco#211\4-revision 07-19-12\dgn\agbwd04a.dgn

USERNAME => DWinrow DATE PLOTTED => 19 JUL 2012 TIME PLOTTED => 10:11:23

100% PS&E