DIST.	COUNTY	ROUTE	KILOMETER POST TOTAL PROJECT	SHEET NO.	TOTAL SHEETS
04	SF	80	13.2/13.9	1000S1	1204

REGISTERED ENGINEER - CIVIL

07-12-11

PLANS APPROVAL DATE

PROFESSIONAL ENGINEER — REGISTERED — James P. Duxbury — No. C 64677 — Exp. 06/30/13 — CIVIL — STATE OF CALIFORNIA

The State of California or its officers or agents shall not be responsible for the accuracy or completeness of electronic copies of this plan sheet.

T.Y. LIN / MOFFATT & NICHOL
TWO HARRISON STREET
SAN FRANCISCO, CA 94105

Caltrans now has a web site! To get to the web site, go to: http://www.dot.ca.gov

TOP OF CONCRETE (See Note 2)	
LOCATION	ELEVATION (M)
Pier T1 (Tower)	+ 3.350

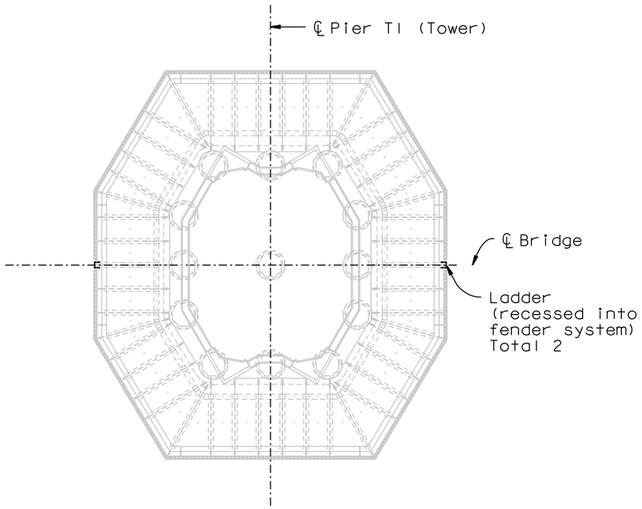

PIER T1 (TOWER)

KEY PLAN
1:300

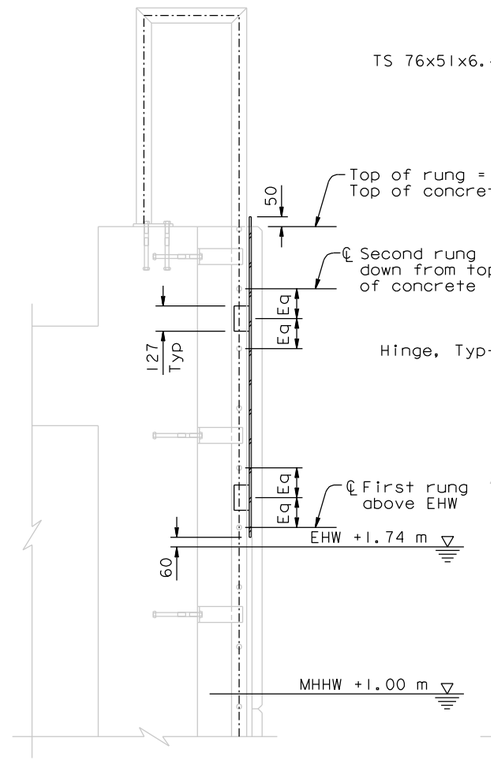

LADDER SECTION
1:15

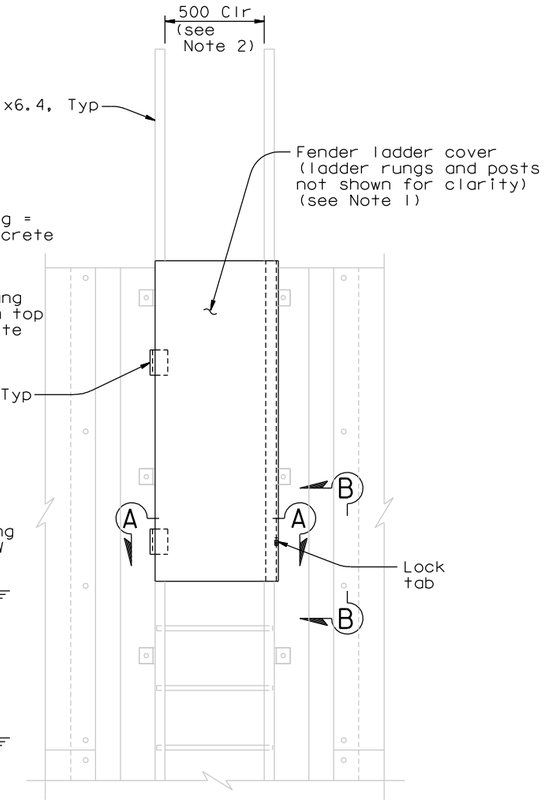

LADDER ELEVATION
1:15

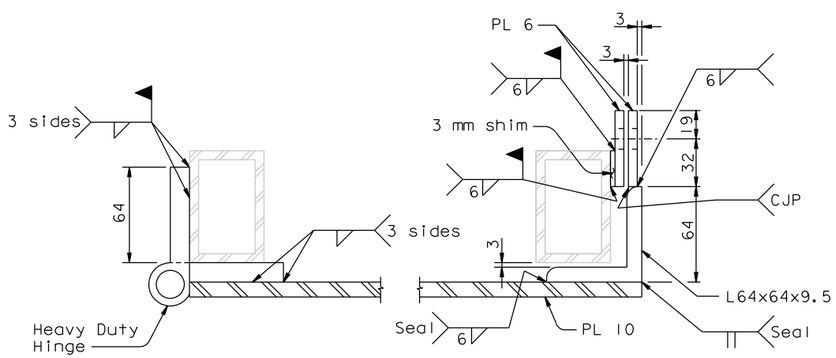

Height = 127
Thickness = 13
Pin Dia = 19

SECTION A-A
1:2

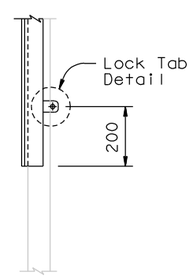

VIEW B-B
1:10

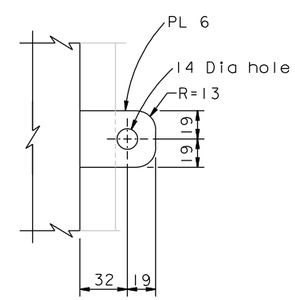

LOCK TAB DETAIL
1:2

NOTES:

1. Covers shall be installed on all fender ladders.
2. The Contractor shall verify the top of concrete elevation and the existing fender ladder dimensions prior to fabrication.
3. Steel shall be ASTM A709M Grade 345, galvanized.

CONTRACT CHANGE ORDER NO. _____
SHEET ____ OF ____

REQUESTS FOR INFORMATION NOT ADDRESSED IN THIS CCO REMAIN IN FORCE

ALL DIMENSIONS ARE IN MILLIMETERS UNLESS OTHERWISE SHOWN

R. Valizadeh/V. Toan/Y.L./W.L./F.C.
DESIGN OVERSIGHT
SIGN OFF DATE 07/12/11

MARK	DATE	DESCRIPTIONS	BY	CH'D	CCO#
0	07/12/11	SAS SECURITY ENHANCEMENTS	JD	TH	210

REVISIONS

DESIGN	BY J. Duxbury	CHECKED T. Ho	
DETAILS	BY A. Baumberger	CHECKED T. Ho	
QUANTITIES	BY A. Baumberger	CHECKED T. Ho	

PREPARED FOR THE STATE OF CALIFORNIA DEPARTMENT OF TRANSPORTATION

R. Manzanarez
PROJECT ENGINEER

BRIDGE NO. 34-0006L/R
KILOMETER POST 13.2/13.9

SAN FRANCISCO OAKLAND BAY BRIDGE
EAST SPAN SEISMIC SAFETY PROJECT
SELF-ANCHORED SUSPENSION BRIDGE
(SUPERSTRUCTURE & TOWER)

FENDER LADDER COVER

Rev. Date: 5-18-98

ORIGINAL SCALE IN MILLIMETERS FOR REDUCED PLANS 0 10 20 30 40 50 60 70 80 90 100

CU 04
EA 0120F1

DISREGARD PRINTS BEARING EARLIER REVISION DATES 07/12/11

REVISION DATES (PRELIMINARY STAGE ONLY)

SHEET 583S1 OF

FILE => I:\bb\04-012001\sas\contract plans and cco\cco\cco#210\1-original 07-12-11\dgn\akfen12a.dgn

100% PS&E

DATE PLOTTED => 12 JUL 2011 TIME PLOTTED => 10:19:33

USERNAME => PTom