DIST	COUNTY	ROUTE	KILOMETER POST TOTAL PROJECT	SHEET No	TOTAL SHEETS
04	SF	80	13.2/13.9	74R1	1204

REGISTERED STRUCTURAL ENGINEER — DATE 12/19/02

PLANS APPROVAL DATE

REGISTERED PROFESSIONAL ENGINEER — Mee Shing Owyang — No. 24960 — Exp. 12/31/05 — CIVIL — STATE OF CALIFORNIA

PARSONS BRINCKERHOFF QUADE & DOUGLAS, INC.
303 SECOND STREET, SUITE 700 N
SAN FRANCISCO, CA 94107

The State of California or its officers or agents shall not be responsible for the accuracy or completeness of electronic copies of this plan sheet.

Caltrans now has a web site! To get to the web site, go to http://www.dot.ca.gov

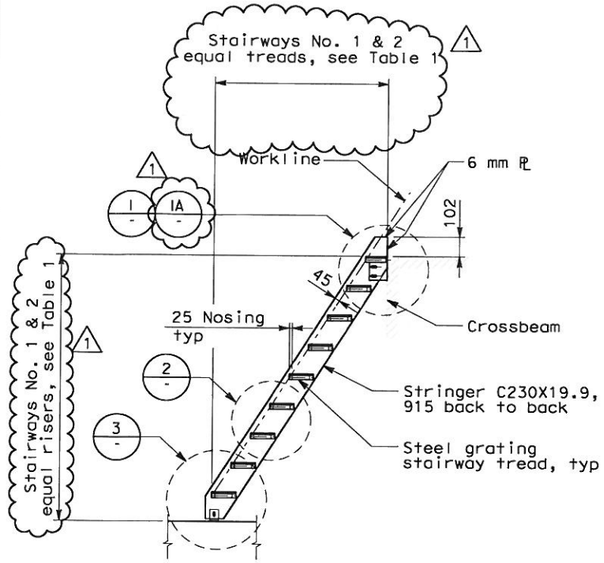

TYPICAL STAIR SECTIONS

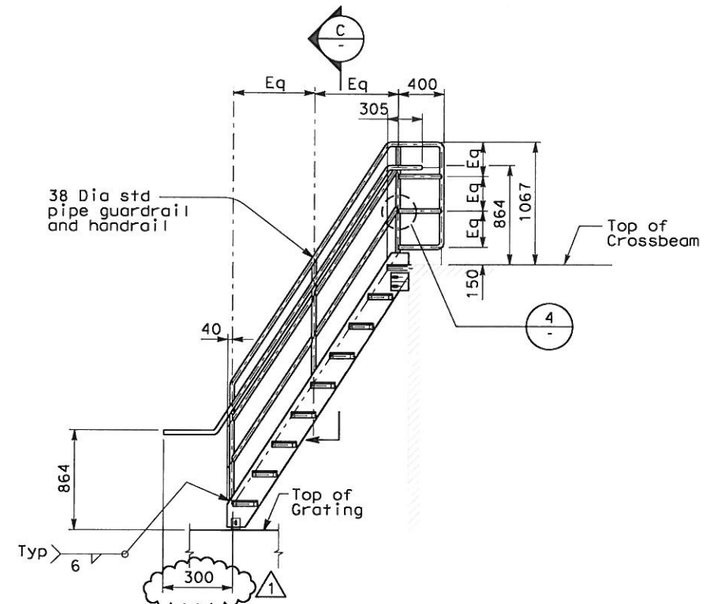

TYPICAL HANDRAIL ARRANGEMENT

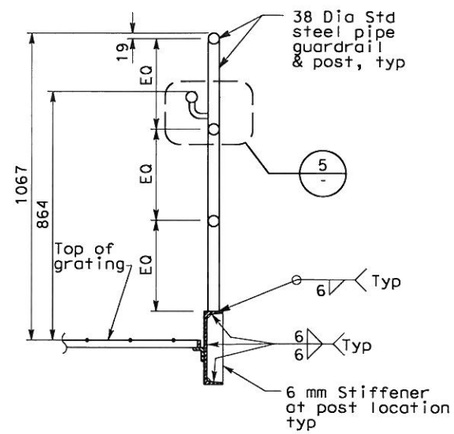

SECTION A SCALE:1:25 (AS-2)

SECTION B SCALE:1:25 (AS-2)

SECTION C SCALE:1:10

TABLE 1

		TREADS	RISERS
Service Platform 4	Stairway No.1	12 Treads @ 137.5 =1650	12 risers @ 236+/-=2836
	Stairway No.2	9 Treads @ 165 =1485	9 risers @ 229+/-=2065
Service Platforms 5,6,7,8	Stairway No.1	10 Treads @ 165 =1650	10 risers @ 230+/-=2302
	Stairway No.2	9 Treads @ 165 =1485	9 risers @ 229+/-=2064

NOTES:

1. The contractor shall verify all controlling field dimensions before ordering or fabricating any material.
2. For structural notes, see sheet AS-1.

REGISTERED PROFESSIONAL ENGINEER — SAFIUDDIN A. MOHAMMED — No. 71894 — Exp. 12/31/11 — CIVIL — STATE OF CALIFORNIA

FOR REVISION ONLY

REQUEST FOR INFORMATION NOT ADDRESSED IN THIS CCO REMAIN IN FORCE

MARK	DATE	DESCRIPTIONS	BY	CH'D	CCO#
1	11/07/11	PLATFORM MODIFICATIONS	SM	CK	206

REVISIONS

CONTRACT CHANGE ORDER NO. 206
SHEET 2 OF 9

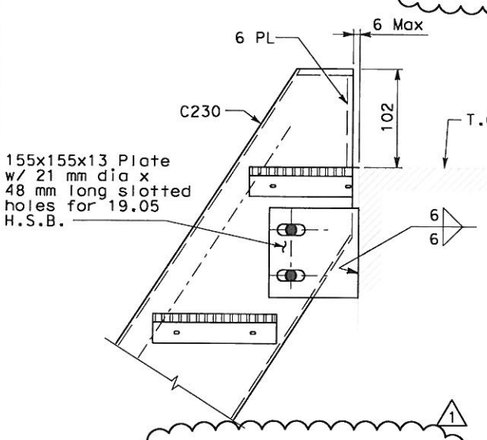

DETAIL: PLATFORMS 5,6,7,8 (1) SCALE: 1:5

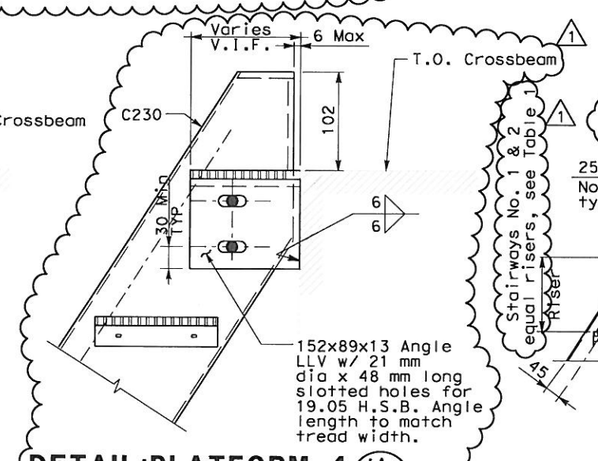

DETAIL: PLATFORM 4 (1A) SCALE: 1:5

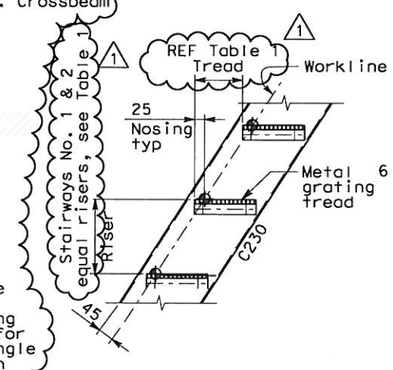

DETAIL (2) SCALE: 1:10

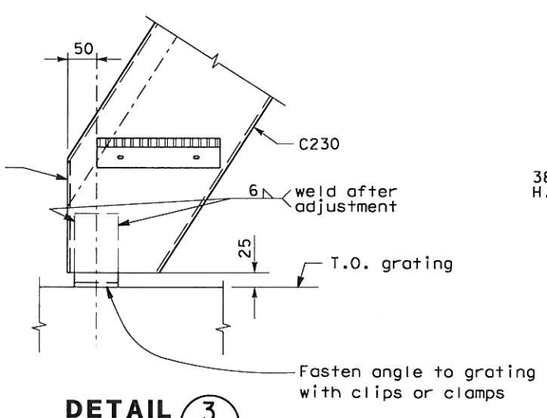

DETAIL (3) SCALE: 1:5

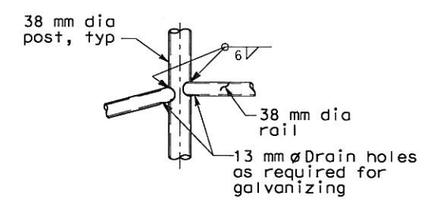

DETAIL (4) SCALE: 1:5

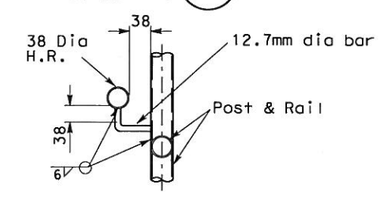

DETAIL (5) SCALE: 1:5

ALL DIMENSIONS ARE IN MILLIMETERS UNLESS OTHERWISE SHOWN

Bob Zandipour — DESIGN OVERSIGHT	DESIGN	BY M.S. Owyang	CHECKED M.S. Owyang
11-6-03 — SIGN OFF DATE	LAYOUT	BY R. Hernandez	CHECKED M.S. Owyang
	QUANTITIES	BY P. McNamee	CHECKED R. Parrino

STATE OF CALIFORNIA — DEPARTMENT OF TRANSPORTATION

DIVISION OF STRUCTURES — STRUCTURAL DESIGN

BRIDGE NO. 34-0006 — KILOMETER POST 13.2/13.9

SAS SUPERSTRUCTURE
SERVICE PLATFORM DETAILS

AS-4

ORIGINAL SCALE IN MILLIMETERS FOR REDUCED PLANS 0 10 20 30 40 50 60 70 80 90 100

CU 04251
EA 0120F1

DISREGARD PRINTS BEARING EARLIER REVISION DATES

REVISION DATES (PRELIMINARY STAGE ONLY) — SHEET — OF

DGN FILE => 04-0120f1_0074R01.dgn
USERNAME => KoonC

DATE PLOTTED => 11/8/2011 TIME PLOTTED => 8:30:06 AM

REQUEST FOR INFORMATION NOT ADDRESSED IN THIS CCO REMAIN IN FORCE					
4	11/07/11	PLATFORM MODIFICATIONS	SM	CK	206
3	10/15/10	SERVICE PLATFORM ELECTRICAL CHANGES	NK	MSO	55
2	04/09/09	SERVICE PLATFORM ELECTRICAL CHANGES	GB	MSO	55
1	06/12/08	SERVICE PLATFORM ELECTRICAL CHANGES	GB	MSO	55
MARK	DATE	DESCRIPTIONS	BY	CH'D	CCO#
		REVISIONS			

CONTRACT CHANGE ORDER NO. 206
SHEET 3 OF 9

DIST	COUNTY	ROUTE	KILOMETER POST TOTAL PROJECT	SHEET No	TOTAL SHEETS
04	SF	80	13.2/13.9	82R4	1204

REGISTERED STRUCTURAL ENGINEER 4/02/04 DATE

12-6-04
PLANS APPROVAL DATE

REGISTERED PROFESSIONAL ENGINEER Mee Shing Owyang No. 24960 Exp. 12/31/05 CIVIL STATE OF CALIFORNIA

PARSONS BRINCKERHOFF QUADE & DOUGLAS, INC.
303 SECOND STREET, SUITE 700 N
SAN FRANCISCO, CA 94107

The State of California or its officers or agents shall not be responsible for the accuracy or completeness of electronic copies of this plan sheet.

Caltrans now has a web site! To get to the web site, go to http://www.dot.ca.gov

Caltrans Metric

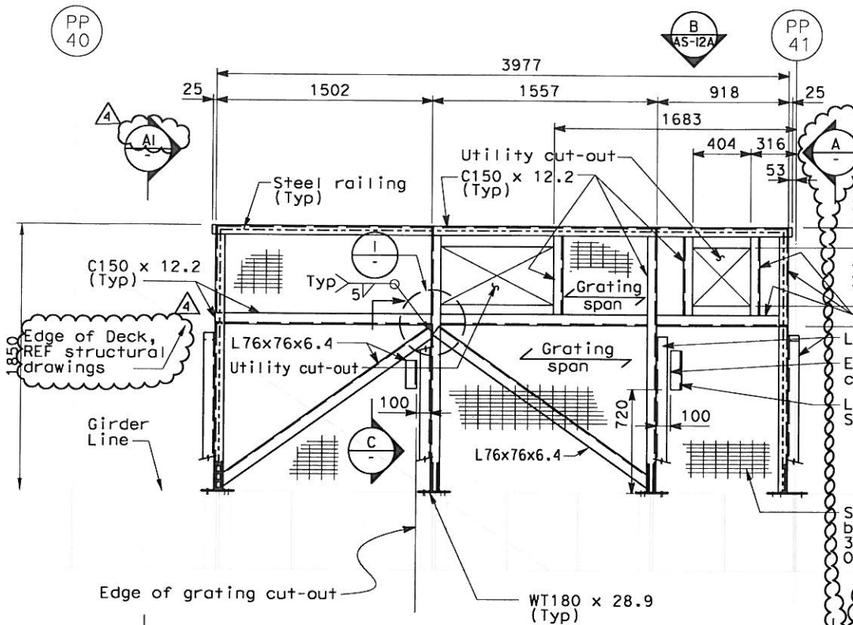

PLAN
SCALE: 1:20

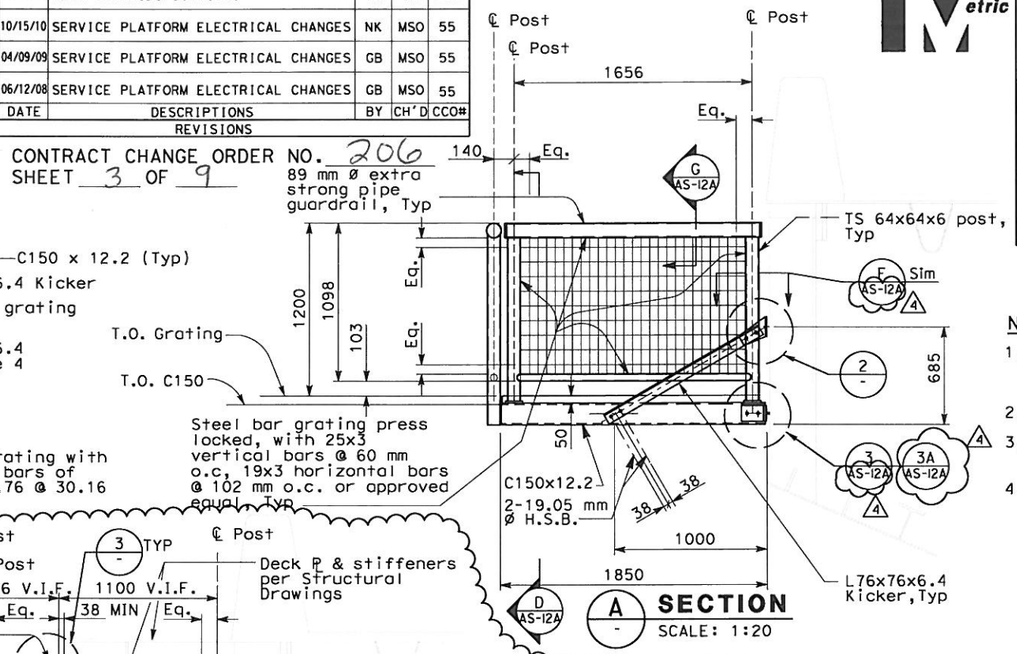

A SECTION
SCALE: 1:20

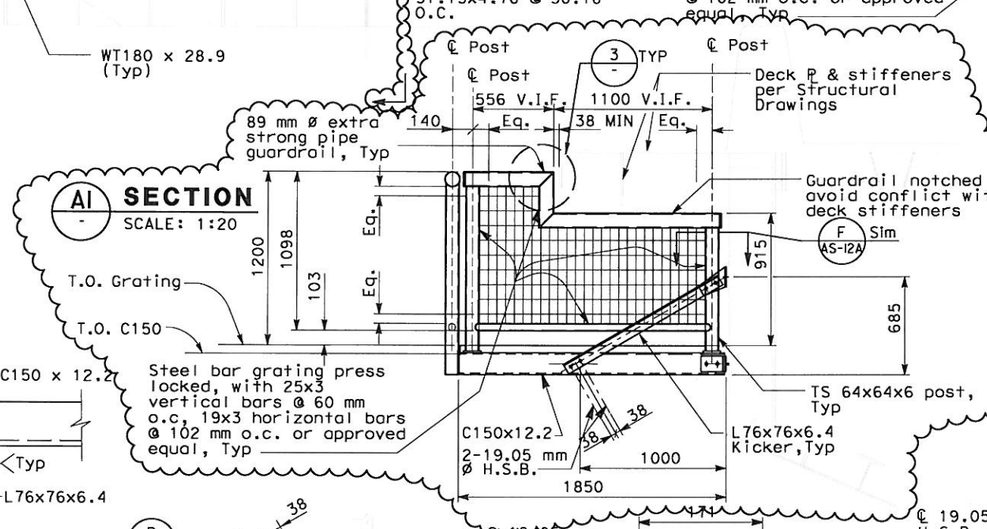

A1 SECTION
SCALE: 1:20

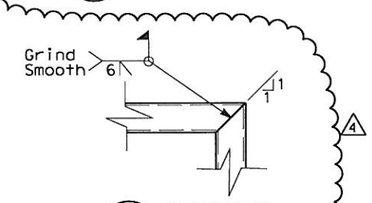

3 DETAIL
NO SCALE

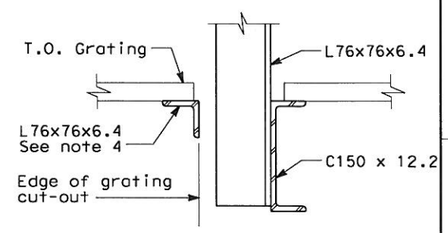

D SECTION
NO SCALE

NOTES:

1. The contractor shall verify all controlling field dimensions before ordering or fabricating any material.
2. For structural notes, see sheet AS-1.
3. For pull box support locations, see electrical plans.
4. Weld L76x76x6.4 to each cut bearing bar at cut-out. Extend L76x76x6.4 beyond cut-out and weld it to at least three bearing bars on each side of cut-out supported by platform framing.

REGISTERED PROFESSIONAL ENGINEER SAFIUDDIN A. MOHAMMED No. 71894 Exp. 12/31/11 CIVIL STATE OF CALIFORNIA

FOR REVISION ONLY

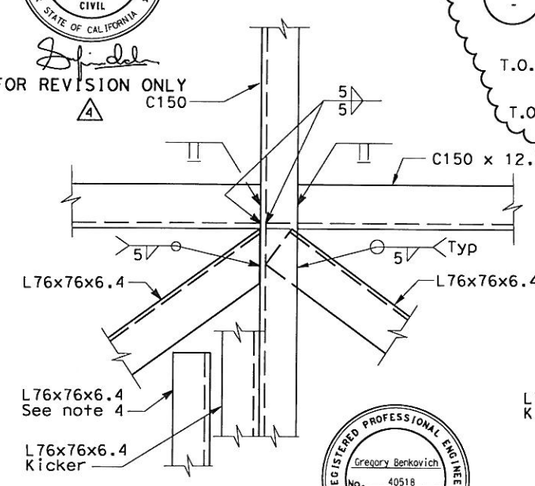

I DETAIL
NO SCALE

REGISTERED PROFESSIONAL ENGINEER Gregory Benkovich No. 40518 Exp. 3/31/11 CIVIL STATE OF CALIFORNIA

FOR REVISION ONLY
1 2 3

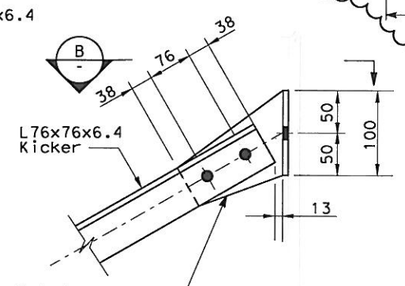

2 DETAIL
NO SCALE

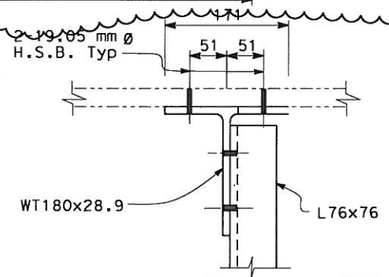

WT180x28.9 OPTION

B SECTION
NO SCALE

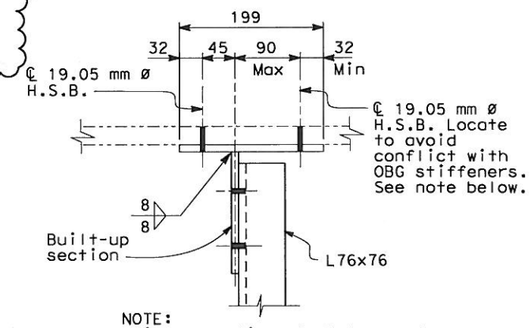

NOTE:
Built-up option shall be used only when when 19 mm ø H.S.B. interfere with OBG stiffeners.

BUILT-UP OPTION

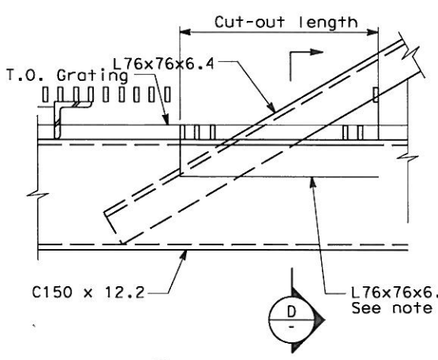

C SECTION
NO SCALE

ALL DIMENSIONS ARE IN MILLIMETERS UNLESS OTHERWISE SHOWN

Bob Zandipour, DESIGN OVERSIGHT, 4-14-04, SIGN OFF DATE	DESIGN	BY E. Lucas	CHECKED M. S. Owyang	PREPARED FOR THE STATE OF CALIFORNIA DEPARTMENT OF TRANSPORTATION	Brady Nadell, PROJECT ENGINEER
	LAYOUT	BY L. Reyes	CHECKED M. S. Owyang		
	QUANTITIES	BY I. Horton	CHECKED P. McNamee		

ORIGINAL SCALE IN MILLIMETERS FOR REDUCED PLANS 0 10 20 30 40 50 60 70 80 90 100

CU 04251
EA 0120F1

DGN FILE => 04-0120f1_0082R04.dgn
USERNAME => KoonC

BRIDGE NO. 34-0006
KILOMETER POST 13.2/13.9

SAS SUPERSTRUCTURE

PULL BOX SUPPORT PLAN, SECTIONS AND DETAILS

AS-12

DISREGARD PRINTS BEARING EARLIER REVISION DATES

REVISION DATES (PRELIMINARY STAGE ONLY) SHEET OF

DATE PLOTTED => 11/8/2011 TIME PLOTTED => 8:30:46 AM

REQUEST FOR INFORMATION NOT ADDRESSED IN THIS CCO REMAIN IN FORCE					
3	11/07/11	PLATFORM MODIFICATIONS	SM	CK	206
2	10/15/10	SERVICE PLATFORM ELECTRICAL CHANGES	NK	MSO	55
1	07/01/09	SERVICE PLATFORM ELECTRICAL CHANGES	GB	MSO	55
0	06/12/08	SERVICE PLATFORM ELECTRICAL CHANGES	GB	MSO	55
MARK	DATE	DESCRIPTIONS	BY	CH'D	CCO#
		REVISIONS			

Caltrans Metric

DIST	COUNTY	ROUTE	KILOMETER POST TOTAL PROJECT	SHEET No	TOTAL SHEETS
04	SF	80	13.2/13.9	82 S1R3	1204

Gregory Benkovich 6/12/08
REGISTERED STRUCTURAL ENGINEER DATE

REGISTERED PROFESSIONAL ENGINEER Gregory Benkovich No. C40518 Exp. 3/31/09 CIVIL STATE OF CALIFORNIA

PLANS APPROVAL DATE

PARSONS BRINCKERHOFF QUADE & DOUGLAS, INC.
303 SECOND STREET, SUITE 700 N
SAN FRANCISCO, CA 94107

The State of California or its officers or agents shall not be responsible for the accuracy or completeness of electronic copies of this plan sheet.

Caltrans now has a web site! To get to the web site, go to http://www.dot.ca.gov

CONTRACT CHANGE ORDER NO. 206
SHEET 4 OF 9

REGISTERED PROFESSIONAL ENGINEER Gregory Benkovich No. 40518 Exp. 3/31/11 CIVIL STATE OF CALIFORNIA

Gregory Benkovich
FOR REVISION ONLY 2

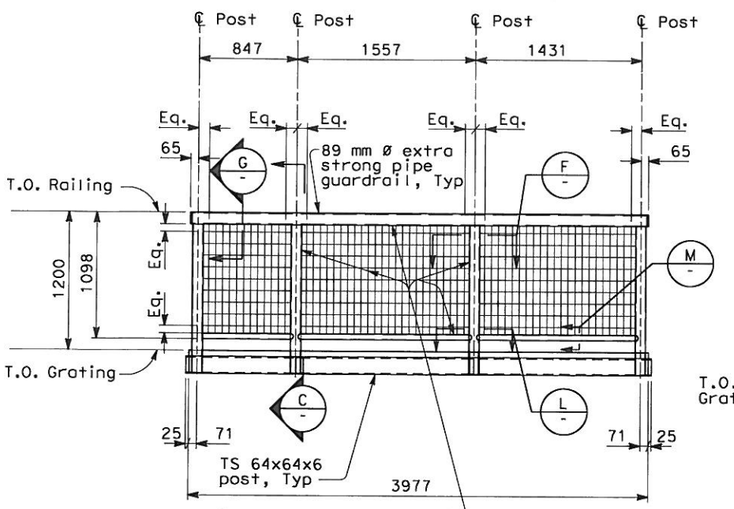

B AS-12 **ELEVATION** SCALE: 1:25

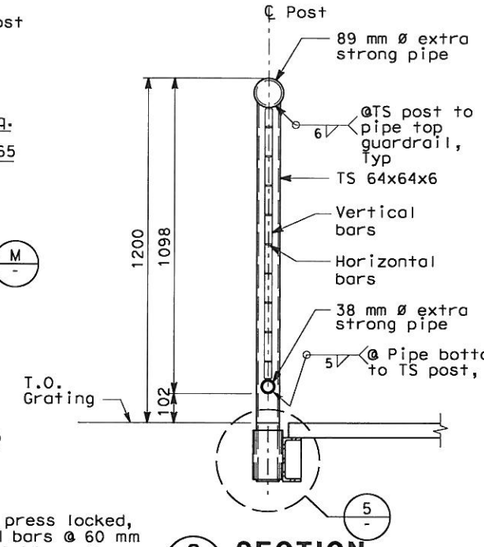

C AS-12 **SECTION** SCALE: 1:10

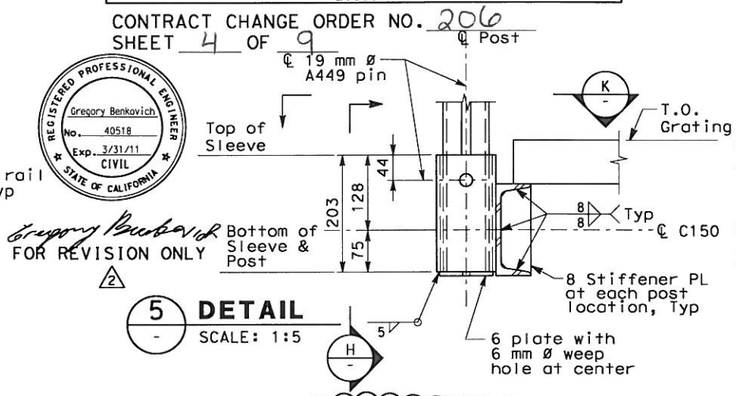

5 **DETAIL** SCALE: 1:5

NOTES:

1. The contractor shall verify all controlling field dimensions before ordering or fabricating any material.
2. For structural notes, see sheet AS-1.
3. For framing member sizes see sheet No. AS-12.

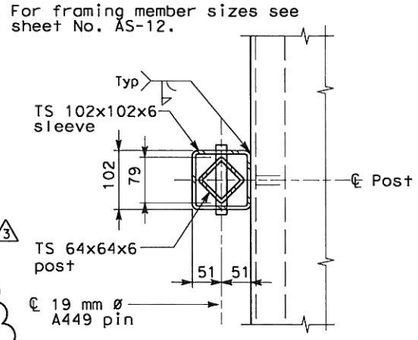

K **SECTION** SCALE: 1:5

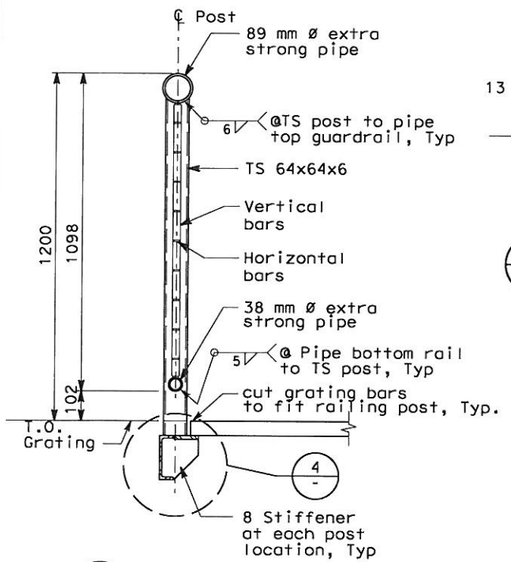

D AS-12 **SECTION** SCALE: 1:10

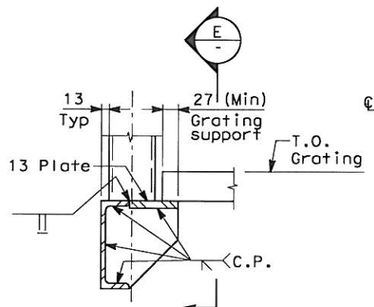

4 **DETAIL** SCALE: 1:5

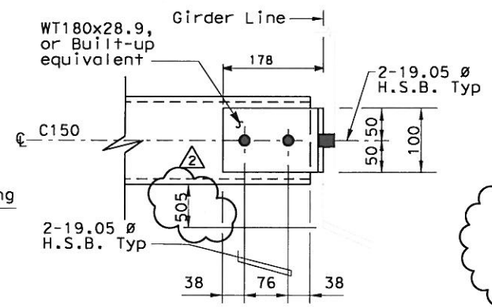

3 AS-12 **DETAIL** NO SCALE

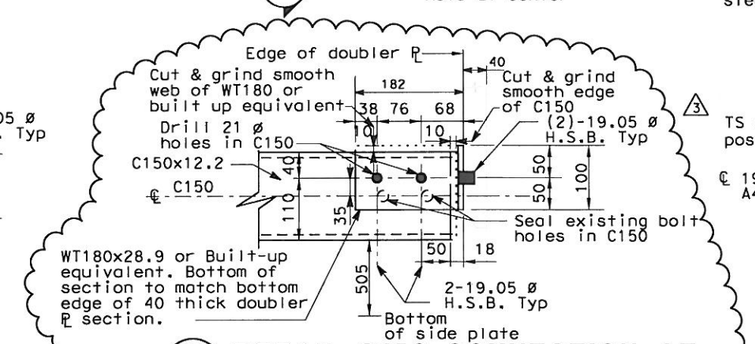

3A AS-12 **DETAIL-C150 CONNECTION AT DOUBLER PLATE LOCATIONS** NO SCALE

REGISTERED PROFESSIONAL ENGINEER SAFIUDDIN A. MOHAMMED No. 71894 Exp. 12/31/11 CIVIL STATE OF CALIFORNIA

FOR REVISION ONLY 3

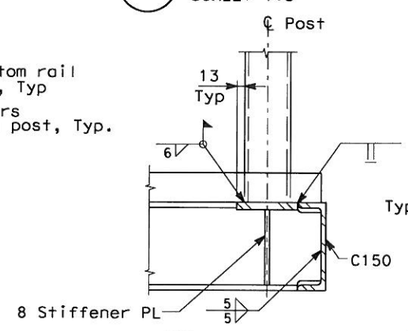

E **SECTION** SCALE: 1:5

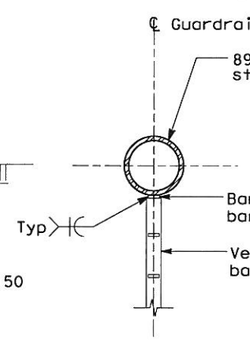

G AS-12 **SECTION** SCALE: 1:5

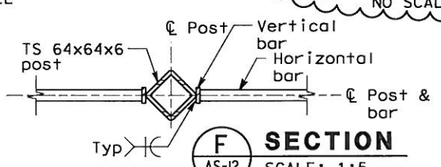

F AS-12 **SECTION** SCALE: 1:5

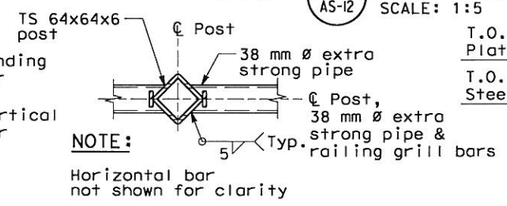

NOTE:
Horizontal bar not shown for clarity

L **SECTION** SCALE: 1:5

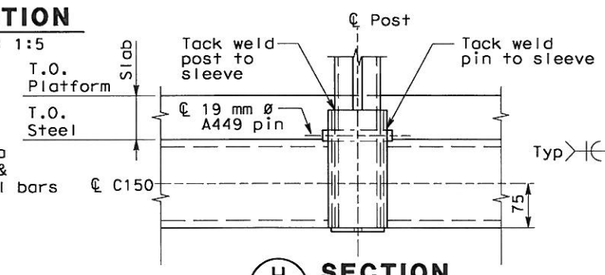

H **SECTION** SCALE: 1:5

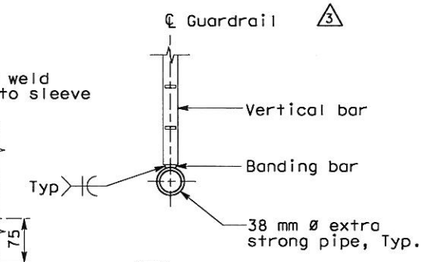

M **SECTION** SCALE: 1:5

ALL DIMENSIONS ARE IN MILLIMETERS UNLESS OTHERWISE SHOWN

Bob Zandipour, DESIGN OVERSIGHT 4-14-04, SIGN OFF DATE	DESIGN BY E. Lucas CHECKED M. S. Owyang	PREPARED FOR THE STATE OF CALIFORNIA DEPARTMENT OF TRANSPORTATION	Brady Nadell, PROJECT ENGINEER	BRIDGE NO. 34-0006	SAS SUPERSTRUCTURE
	LAYOUT BY L. Reyes CHECKED M. S. Owyang			KILOMETER POST 13.2/13.9	PULL BOX SUPPORT PLAN, SECTIONS AND DETAILS — AS-12A
	QUANTITIES BY I. Horton CHECKED P. McNamee		CU 04251 EA 0120F1	DISREGARD PRINTS BEARING EARLIER REVISION DATES	REVISION DATES (PRELIMINARY STAGE ONLY) SHEET OF

ORIGINAL SCALE IN MILLIMETERS FOR REDUCED PLANS 0 10 20 30 40 50 60 70 80 90 100

DGN FILE => 04-0120f1_0082S01R03.dgn
USERNAME => KoonC

DATE PLOTTED => 11/8/2011 TIME PLOTTED => 8:31:33 AM

DIST	COUNTY	ROUTE	KILOMETER POST TOTAL PROJECT	SHEET No	TOTAL SHEETS
04	SF	80	13.2/13.9	271 R5	1204

REGISTERED ELECTRICAL ENGINEER 12/19/02 DATE

12-6-04
PLANS APPROVAL DATE

REGISTERED PROFESSIONAL ENGINEER JENS ERLINGSSON No. 8249 Exp. 9/30/06 ELECTRICAL STATE OF CALIFORNIA

PB POWER, Inc.
A Parsons Brinckerhoff Company
303 Second St., Suite 700N
San Francisco, CA 94107-1317

The State of California or its officers or agents shall not be responsible for the accuracy or completeness of electronic copies of this plan sheet.

Caltrans now has a web site! To get to the web site, go to http://www.dot.ca.gov

Caltrans Metric

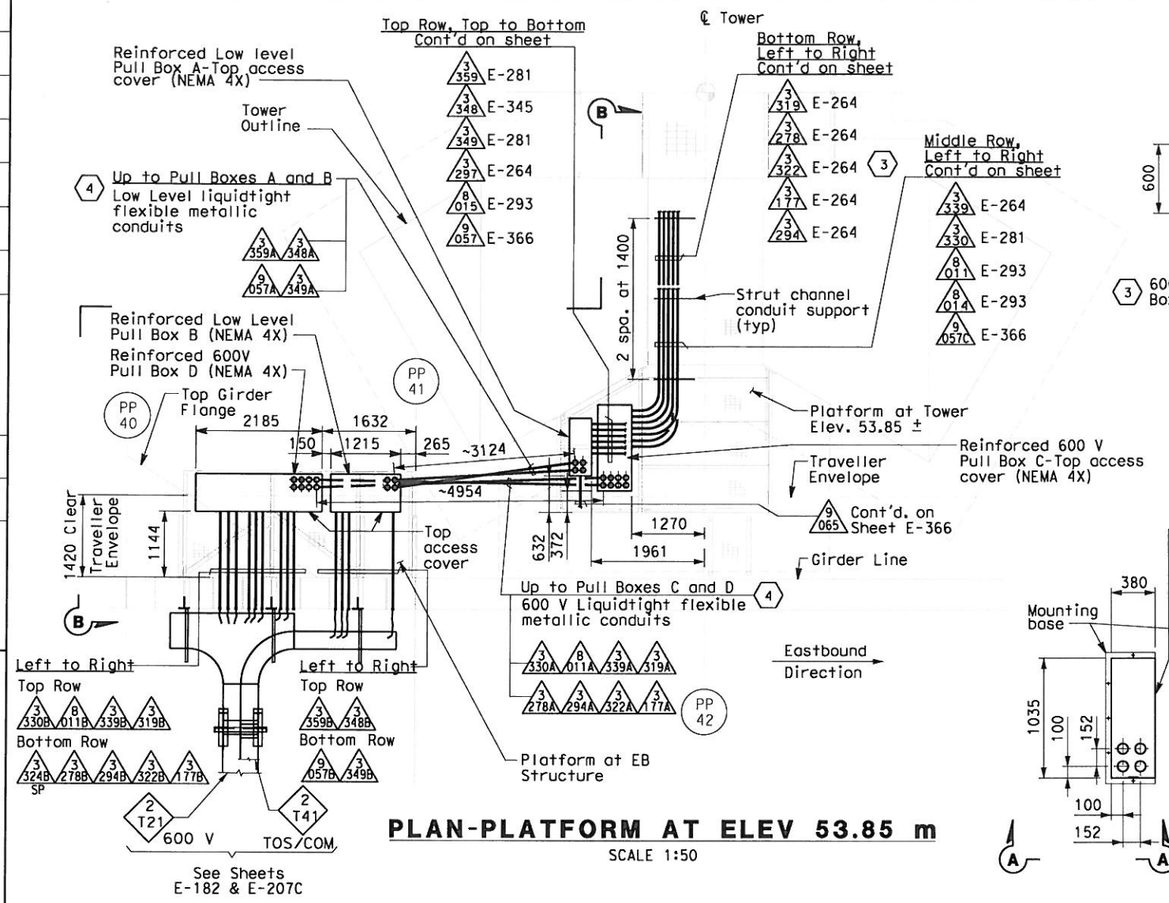

PLAN-PLATFORM AT ELEV 53.85 m

SCALE 1:50

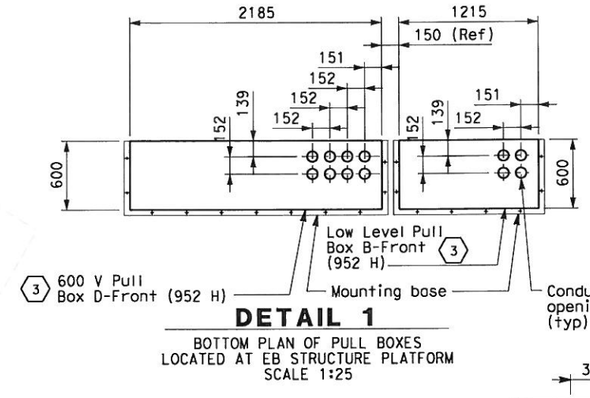

DETAIL 1

BOTTOM PLAN OF PULL BOXES LOCATED AT EB STRUCTURE PLATFORM
SCALE 1:25

REGISTERED PROFESSIONAL ENGINEER DAVID H. OTO No. 10699 Exp. 06/30/2013 ELECTRICAL STATE OF CALIFORNIA

FOR REVISION ONLY 5

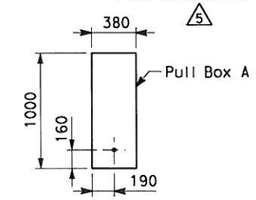

SECTION A-A

SCALE 1:25

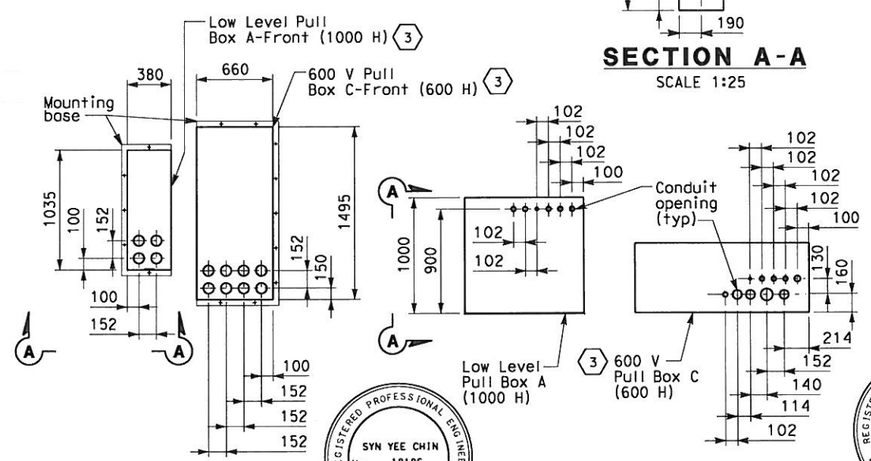

DETAIL 2

BOTTOM PLAN OF PULL BOXES LOCATED AT TOWER PLATFORM
SCALE 1:25

REGISTERED PROFESSIONAL ENGINEER SYN YEE CHIN No. 18186 Exp. 09/30/2011 ELECTRICAL STATE OF CALIFORNIA

FOR REVISION ONLY 4

DETAIL 3

FRONT ELEVATION OF PULL BOXES LOCATED AT TOWER PLATFORM
SCALE 1:25

REGISTERED PROFESSIONAL ENGINEER S. A. ESTOOLE, JR. No. E-10151 Exp. 12/31/2008 ELECTRICAL STATE OF CALIFORNIA

FOR REVISION ONLY 2

REGISTERED PROFESSIONAL ENGINEER FADI WALIEDDINE No. 11465 Exp. 12/31/2009 ELECTRICAL STATE OF CALIFORNIA

FOR REVISION ONLY 3

SHEET NOTES

1. Coil 3 meters long of cable for each circuits inside the pull boxes.
2. Deleted.
3. For additional fabrication details of pull boxes, see sheets E-264G and E-264H.
4. Electrical conduit design between Eastbound Structure and Main Tower is based on the maximum expansion of 1000 mm all directions. For conduit support, see E-78H.

NOTES

1. For location of sleeves Eastbound Structure PP-40 and PP-41, see Structural Plans.
2. Each liquidtight flexible metallic conduit shall be provided with #6 green insulated ground conductor inside the conduit.
3. Contractor shall verify all the conduit opening prior to start of work.

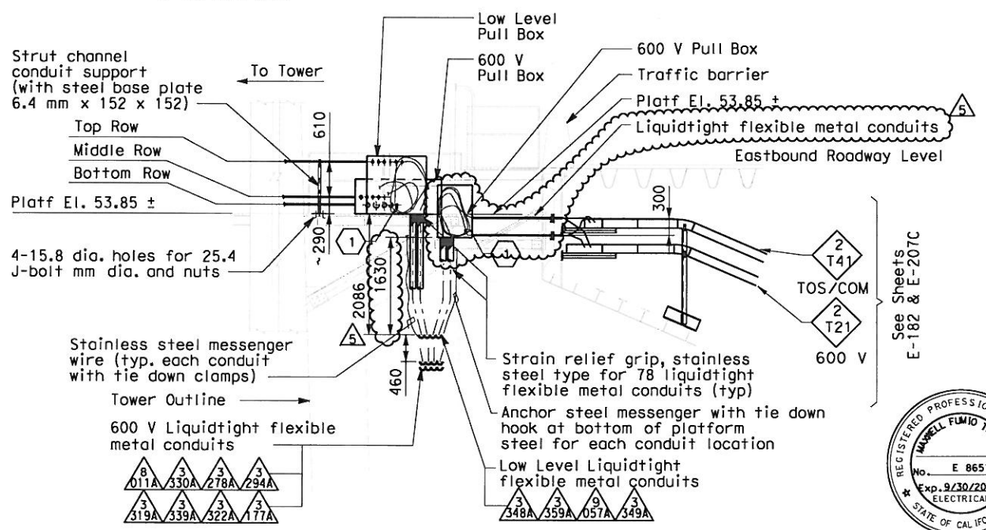

SECTION B

SCALE 1:50

REGISTERED PROFESSIONAL ENGINEER MARCELL FUMIO TAKAKI No. E 8651 Exp. 9/30/2008 ELECTRICAL STATE OF CALIFORNIA

FOR REVISION ONLY 1

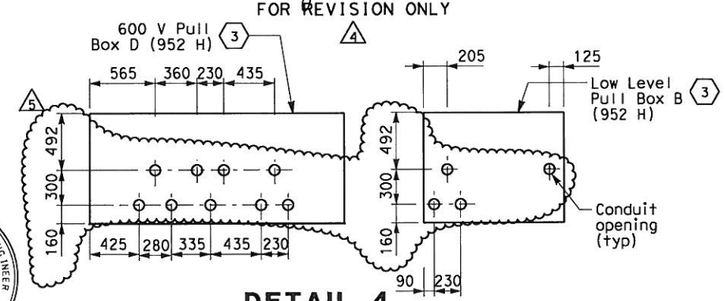

DETAIL 4

FRONT ELEVATION OF PULL BOXES LOCATED AT EB STRUCTURE PLATFORM
SCALE 1:25

MARK	DATE	DESCRIPTIONS	BY	CH'D	CCO#
5	11/07/11	PLATFORM MODIFICATION	RM	DO CK	206
4	02/24/10	TOWER UTILITY PANELS	TW RB	RG SYC	70
3	10/03/08	STRONG MOTION SYSTEM	TW	RG FW	74
2	02/25/08	CABLE TRAY CHANGES	MP	RG SE	42S1
1	02/19/08	ELECTRICAL MODIFICATIONS	MP EL	RR	42

REQUEST FOR INFORMATION NOT ADDRESSED IN THIS CCO REMAIN IN FORCE

REVISIONS

CONTRACT CHANGE ORDER NO. 206
SHEET 5 OF 9

DETAILS
TOWER AND SUSPENSION CABLE

SCALE: AS NOTED

E-264A

THIS PLAN ACCURATE FOR ELECTRICAL WORK ONLY.

ALL DIMENSIONS ARE IN MILLIMETERS UNLESS OTHERWISE SHOWN.

FOR REDUCED PLANS ORIGINAL SCALE IS IN MILLIMETERS 0 20 40 60 80

DGN FILE =>04-0120f1_0271R05.dgn
USERNAME =>KoonC

CU 04251 EA 0120F1

DATE PLOTTED => 11/8/2011
TIME PLOTTED => 8:32:17 AM

LAST REVISION 00-00-00

STATE OF CALIFORNIA - DEPARTMENT OF TRANSPORTATION
Caltrans

DESIGN OVERSIGHT BEHZAD GOLEMOHAMMADI

CALCULATED/DESIGNED BY EJL CHECKED BY JE

DATE REVISED 3/04 DATE REVISED 3/04

DIST	COUNTY	ROUTE	KILOMETER POST TOTAL PROJECT	SHEET No	TOTAL SHEETS
04	SF	80	13.2/13.9	271 S6R1	1204

REGISTERED ELECTRICAL ENGINEER DATE

PLANS APPROVAL DATE

REGISTERED PROFESSIONAL ENGINEER FADI WALIEDDINE No. 11465 Exp. 12/31/2009 ELECTRICAL STATE OF CALIFORNIA

PB AMERICAS, Inc.
A Parsons Brinckerhoff Company
303 Second St., Suite 700N
San Francisco, CA 94107-1317

The State of California or its officers or agents shall not be responsible for the accuracy or completeness of electronic copies of this plan sheet.

Caltrans now has a web site! To get to the web site, go to http://www.dot.ca.gov

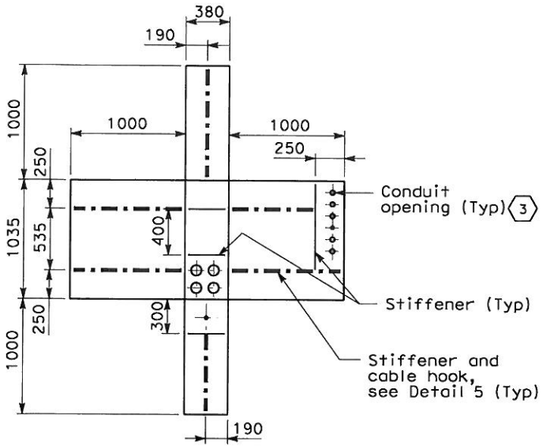

DETAIL 1
PULL BOX A - EXPLODED PLAN VIEW FROM THE INSIDE (1)

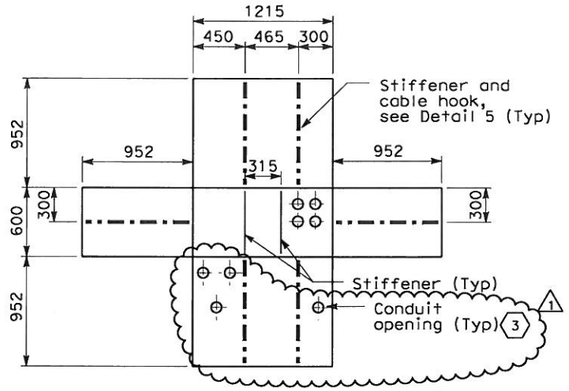

DETAIL 2
PULL BOX B - EXPLODED PLAN VIEW FROM THE INSIDE (1)

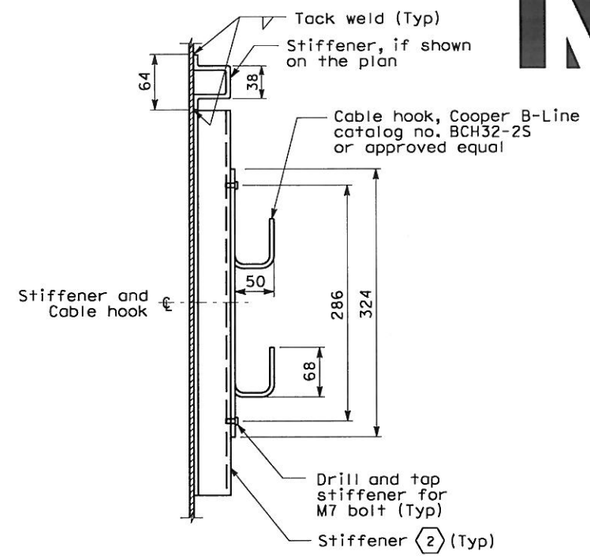

DETAIL 5
STIFFENER AND CABLE HOOK ELEVATION VIEW

SHEET NOTES

(1) Furnish and install stiffeners and cable hooks around the inside walls of pull box. Provide minimal distance between pull box edge and stiffener.

(2) The specified location and quantity of stiffeners represents only the recommended location for attaching the cable hooks. Stiffeners with cable hooks shall be able to withstand a minimum total weight of 60 kg. Additional stiffeners may be installed per the fabricator's discretion to maintain the integrity of the box based on the form and shape.

(3) For actual location of conduit openings, see sheet E-264A.

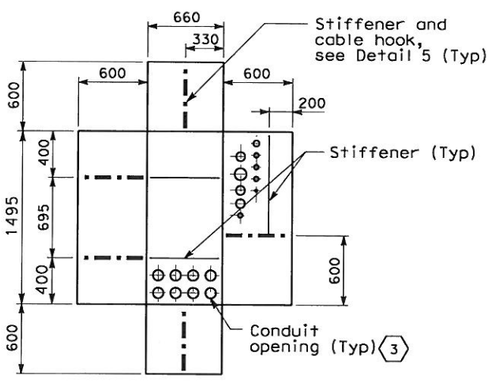

DETAIL 3
PULL BOX C - EXPLODED PLAN VIEW FROM THE INSIDE (1)

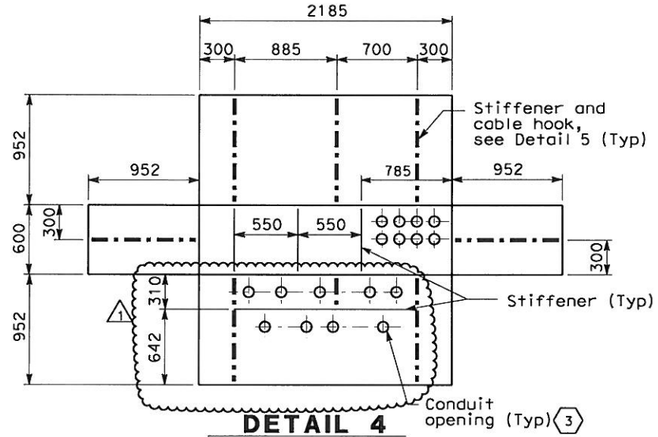

DETAIL 4
PULL BOX D - EXPLODED PLAN VIEW FROM THE INSIDE (1)

NOTES:

1. References:
   - For plan and additional notes, see sheet E-264A.
   - For pull box plan and elevation view, see sheet E-264H.

REGISTERED PROFESSIONAL ENGINEER DAVID H. OTO No. 10699 Exp. 06/30/2013 ELECTRICAL STATE OF CALIFORNIA

FOR REVISION ONLY (1)

REQUEST FOR INFORMATION NOT ADDRESSED IN THIS CCO REMAIN IN FORCE					
1	11/07/11	PLATFORM MODIFICATIONS	RM	DO CK	206
0	09/18/09	TOWER UTILITY PANELS	RSB	RG FW	70
MARK	DATE	DESCRIPTIONS	BY	CH'D	CCO#
		REVISIONS			

CONTRACT CHANGE ORDER NO. 206
SHEET 6 OF 9

DETAILS
TOWER AND SUSPENSION CABLE
TOWER POWER AND LIGHTING
NO SCALE

E-264G

STATE OF CALIFORNIA - DEPARTMENT OF TRANSPORTATION
Caltrans

DESIGN OVERSIGHT: BEHZAD GOLEMOHAMMADI
CALCULATED/DESIGNED BY
CHECKED BY
DATE REVISED BY
DATE REVISED

THIS PLAN ACCURATE FOR ELECTRICAL WORK ONLY.

ALL DIMENSIONS ARE IN MILLIMETERS UNLESS OTHERWISE SHOWN.

FOR REDUCED PLANS ORIGINAL SCALE IS IN MILLIMETERS 0 20 40 60 80

DGN FILE =>04-0120f1_0271S06R01.dgn
USERNAME =>KoonC

CU 04251 | EA 0120F1

LAST REVISION 00-00-00
DATE PLOTTED => 11/8/2011
TIME PLOTTED => 8:33:08 AM

DIST	COUNTY	ROUTE	KILOMETER POST TOTAL PROJECT	SHEET No	TOTAL SHEETS
04	SF	80	13.2/13.9	271 S7R1	1204

REGISTERED ELECTRICAL ENGINEER 9-18-09 DATE

PLANS APPROVAL DATE

REGISTERED PROFESSIONAL ENGINEER FADI WALIEDDINE No. 11465 Exp. 12/31/2009 ELECTRICAL STATE OF CALIFORNIA

PB AMERICAS, Inc.
A Parsons Brinckerhoff Company
303 Second St., Suite 700N
San Francisco, CA 94107-1317

The State of California or its officers or agents shall not be responsible for the accuracy or completeness of electronic copies of this plan sheet.

Caltrans now has a web site! To get to the web site, go to http://www.dot.ca.gov

Caltrans Metric

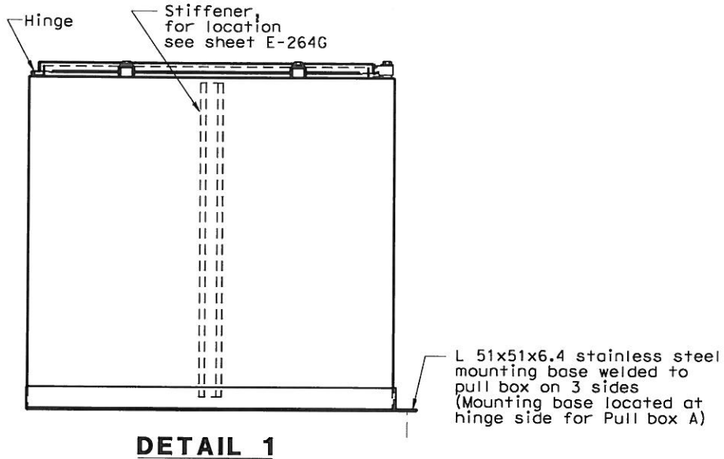

DETAIL 1
TYPICAL PULL BOX - SIDE ELEVATION VIEW (1)(2)
TYPICAL FOR PULL BOX A (1)

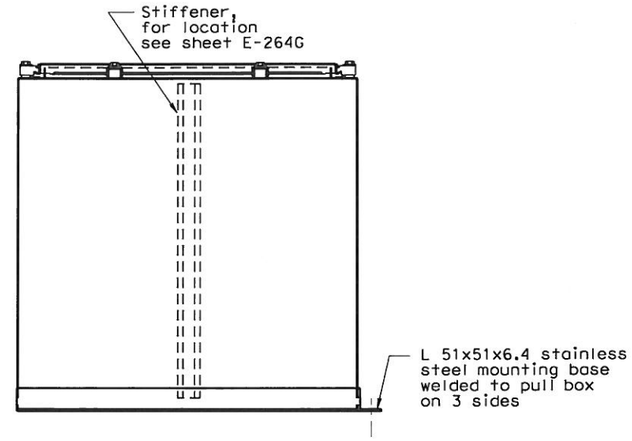

DETAIL 2
PULL BOX C, B AND D - SIDE ELEVATION VIEW (2) (1)

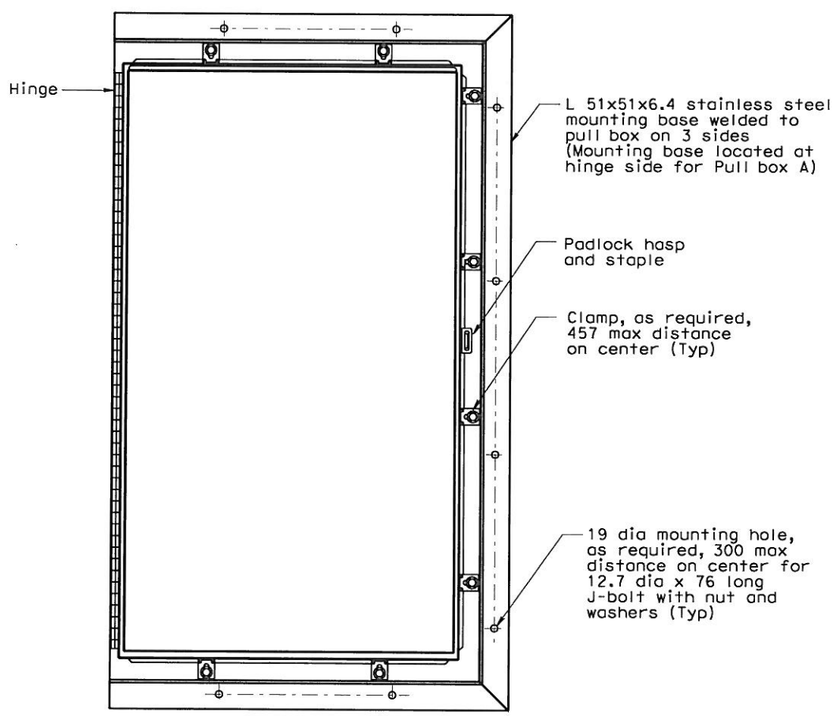

DETAIL 1A
TYPICAL PULL BOX - TOP PLAN VIEW (1)(2)
TYPICAL FOR PULL BOX A (1)

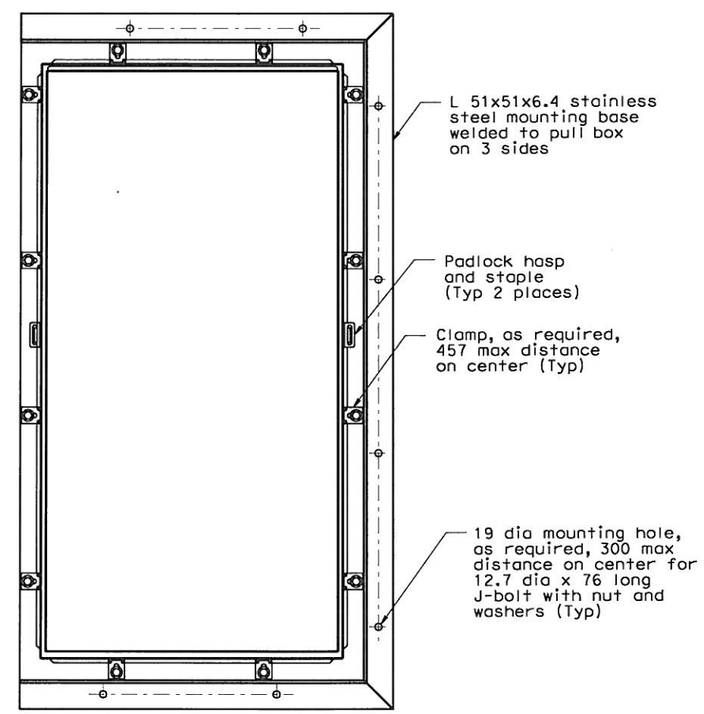

DETAIL 2A
PULL BOX C, B AND D - TOP PLAN VIEW (2) (1)

SHEET NOTES

(1) Furnish and install two gas charged lift supports to pull box door, gas lift support shall be sized for the individual door weight.

(2) Pull Box shall be fabricated of 304 stainless steel, 14 gage (except the bottom plate which shall be 10 gage), Nema type 4X in accordance with the applicable industry standard.

NOTES:

1. References:
   - For plan and additional notes, see sheet E-264A.
   - For pull box exploded view, see sheet E-264G.

REGISTERED PROFESSIONAL ENGINEER DAVID H. OTO No. 10699 Exp. 06/30/2013 ELECTRICAL STATE OF CALIFORNIA

FOR REVISION ONLY (1)

REQUEST FOR INFORMATION NOT ADDRESSED IN THIS CCO REMAIN IN FORCE					
(1)	11/07/11	PLATFORM MODIFICATIONS	RM	DO CK	206
(0)	09/18/09	TOWER UTILITY PANELS	RB	RG FW	70
MARK	DATE	DESCRIPTIONS	BY	CH'D	CCO#
		REVISIONS			

CONTRACT CHANGE ORDER NO. 206
SHEET 7 OF 9

DETAILS
TOWER AND SUSPENSION CABLE
TOWER POWER AND LIGHTING
NO SCALE

E-264H

THIS PLAN ACCURATE FOR ELECTRICAL WORK ONLY.

ALL DIMENSIONS ARE IN MILLIMETERS UNLESS OTHERWISE SHOWN.

FOR REDUCED PLANS ORIGINAL SCALE IS IN MILLIMETERS 0 20 40 60 80

DGN FILE =>04-0120f1_0271S07R01.dgn
USERNAME =>KoonC

CU 04251 | EA 0120F1

STATE OF CALIFORNIA - DEPARTMENT OF TRANSPORTATION
Caltrans

DESIGN OVERSIGHT: BEHZAD GOLEMOHAMMADI

CALCULATED/DESIGNED BY | CHECKED BY | DATE | REVISED BY | DATE REVISED

LAST REVISION 00-00-00

DATE PLOTTED => 11/8/2011
TIME PLOTTED => 8:33:43 AM

DIST	COUNTY	ROUTE	KILOMETER POST TOTAL PROJECT	SHEET No	TOTAL SHEETS
04	SF	80	13.2/13.9	382 R6	1204

REGISTERED ELECTRICAL ENGINEER 12/19/02 DATE

12-6-04
PLANS APPROVAL DATE

REGISTERED PROFESSIONAL ENGINEER JENS ERLINGSSON No. 8249 Exp. 9/30/06 ELECTRICAL STATE OF CALIFORNIA

PB POWER, Inc.
A Parsons Brinckerhoff Company
303 Second St., Suite 700N
San Francisco, CA 94107-1317

The State of California or its officers or agents shall not be responsible for the accuracy or completeness of electronic copies of this plan sheet.

Caltrans now has a web site! To get to the web site, go to http://www.dot.ca.gov

Caltrans Metric

REQUEST FOR INFORMATION NOT ADDRESSED IN THIS CCO REMAIN IN FORCE

MARK	DATE	DESCRIPTIONS	BY	CH'D	CCO#
6	11/07/11	PLATFORM MODIFICATIONS	RM	DO	206
5	07/01/11	TOS MODIFICATIONS	RR	RG	81
4	03/26/10	DEHUMIDIFIER SCADA INTERFACE	RR	RG FW	130
3	12/23/09	TOWER BASE MEP	RR AWG	RG FW	79
2	09/18/09	TOWER UTILITY PANELS	JS TW	RG	70
1	02/19/08	ELECTRICAL MODIFICATIONS	MP EL	RR	42

REVISIONS

CONTRACT CHANGE ORDER NO. 206
SHEET 8 OF 9

REGISTERED PROFESSIONAL ENGINEER MARSELL FUMIO TAKATA No. E 8651 Exp. 9/30/2008 ELECTRICAL STATE OF CALIFORNIA 1

REGISTERED PROFESSIONAL ENGINEER FADI WALIEDDINE No. 11465 Exp. 12/31/2009 ELECTRICAL STATE OF CALIFORNIA 2 3

REGISTERED PROFESSIONAL ENGINEER SYN YEE CHIN No. 18186 Exp. 09/30/2011 ELECTRICAL STATE OF CALIFORNIA 4 5

REGISTERED PROFESSIONAL ENGINEER DAVID H. OTO No. 10699 Exp. 06/30/2013 ELECTRICAL STATE OF CALIFORNIA

FOR REVISION ONLY 6

FOR REVISION ONLY

FOR REVISION ONLY

Syn Yee Chin
FOR REVISION ONLY

CONDUIT DATA

Conduit No.	Reference	Size	Type	Total Fill (mm²)	Allowable Fill (mm²)	Included Cable No.	Conductor Type
3297	E-264, E-264A	27	RGS-PVC coated conduit	219.84	229.03	Pull rope	Soft-Fiber Polyester
						2119-2	4 pair #22,shielded pairs,300 V,PE insulation
						2121-1	1-2PR #18 Twisted Shielded w/overall shield
3298	E-265	53	RGS-PVC coated conduit	102.61	879.42	Pull rope	Soft-Fiber Polyester
						UP210-9	1-3/C #12,600 V, EPR insulation
3299	E-287	27	RGS-PVC coated conduit	196.20	229.03	Pull rope	Soft-Fiber Polyester
						2120-1	1-2PR #18 Twisted Shielded w/overall shield
3303	E-96	53	RGS conduit	490.14		Pull rope	Soft-Fiber Polyester
3304	E-96	53	RGS conduit	490.14		Pull rope	Soft-Fiber Polyester
3307	E-266	41	RGS conduit	262.68	534.55	Pull rope	Soft-Fiber Polyester
						UP210-16	1-3/C + gnd #8, 600V EPR insulation
3308	E-266	53	RGS conduit	717.60	879.42	Pull rope	Soft-Fiber Polyester
						UP210-14	1-3/C + gnd #8, 600V EPR insulation
						UP210-23	1-2/C + gnd #8, 600V EPR insulation
						UP210-26	1-2/C + gnd #8, 600V EPR insulation
3309	E-266	53	RGS conduit	490.14		Pull rope	Soft-Fiber Polyester
						UP210-15	1-3/C + gnd #8, 600V EPR insulation
						UP210-22	1-2/C + gnd #8, 600V EPR insulation
3311	E-265	53	RGS-PVC coated conduit	0.00	879.42	Pull rope	Soft-Fiber Polyester
3313	E-266, E-266A	53	RGS-PVC coated conduit	454.92	879.42	Pull rope	Soft-Fiber Polyester
						UP210-21	1-2/C + gnd #8, 600V EPR insulation
						UP210-23	1-2/C + gnd #8, 600V EPR insulation
3314	E-266, E-266A	53	RGS-PVC coated conduit	454.92	879.42	Pull rope	Soft-Fiber Polyester
						UP210-22	1-2/C + gnd #8, 600V EPR insulation
						UP210-24	1-2/C + gnd #8, 600V EPR insulation
3315	E-266, E-266A	53	RGS-PVC coated conduit	286.0	879.42	Pull rope	Soft-Fiber Polyester
						UP210-5 & 7	1-4/C + gnd #8 600V EPR insulation
3316	E-264B, E-264C	78	RGS-PVC coated conduit	1300.80	1935.24	Pull rope	Soft-Fiber Polyester
	E-278, E-284					UP210-2 & 4	1-4/C + gnd #6, 600 V, EPR insulation
						UP210-14 & 18	1-4/C + gnd #8, 600 V, EPR insulation
						UP210-21	1-2/C + gnd #8, 600V EPR insulation
						UP210-23	1-2/C + gnd #8, 600V EPR insulation
						UP210-26	1-2/C + gnd #8, 600V EPR insulation
3316A	E-266	53	RGS-PVC coated conduit	581.18	879.42	Pull rope	Soft-Fiber Polyester
						UP210-2	1-2/C + gnd #8, 600V EPR insulation
						UP210-4	1-2/C + gnd #8, 600V EPR insulation
						UP210-21	1-2/C + gnd #8, 600V EPR insulation
3316B	E-266	53	RGS-PVC coated conduit	559.91	879.42	Pull rope	Soft-Fiber Polyester
						UP210-2 & 4	1-4/C + gnd #6, 600 V, EPR insulation
						UP210-21	1-2/C + gnd #8, 600V EPR insulation
3319	E-264, E-264A	78	RGS-PVC coated conduit	1521.28	1935.24	2121	1-3/C + gnd #1/0, 600 V, EPR insulation
						2120	1-3/C + gnd #1/0, 600 V, EPR insulation
						Pull rope	Soft-Fiber Polyester
3320	E-264	78	RGS-PVC coated conduit	1281.36	1935.24	2120	1-3/C + gnd #1/0, 600 V, EPR insulation
						Pull rope	Soft-Fiber Polyester
						2123-2	1-3/C + gnd #2, 600 V, EPR insulation
3320A	E-287	53	RGS-PVC coated conduit	754.18	879.42	2120	1-3/C + gnd #1/0, 600 V, EPR insulation
						Pull rope	Soft-Fiber Polyester
3322	E-264, E-264A	78	RGS-PVC coated conduit	754.18	1935.24	2119-A	1-3/C + gnd #1/0, 600 V, EPR insulation
						Pull rope	Soft-Fiber Polyester
3322C	E-265	78	RGS-PVC coated conduit	754.18	1935.24	2119-A	1-3/C + gnd #1/0, 600 V, EPR insulation
						Pull rope	Soft-Fiber Polyester
3323	E-264	78	RGS-PVC coated conduit	754.18	1935.24		
						Pull rope	Soft-Fiber Polyester
						2121	1-3/C + gnd #1/0,600 V, EPR insulation
3323A	E-286	78	RGS-PVC coated conduit	959.40	1935.24		
						Pull rope	Soft-Fiber Polyester
						2121	1-3/C + gnd #1/0,600 V, EPR insulation
						UP210-28	1-2/C + gnd #12, 600V EPR insulation
						UP210-30	1-2/C + gnd #12, 600V EPR insulation

CONDUIT DATA

Conduit No.	Reference	Size	Type	Total Fill (mm²)	Allowable Fill (mm²)	Included Cable No.	Conductor Type
3323B	E-286, E-287	78	RGS-PVC coated conduit	959.40	1935.24		
						Pull rope	Soft-Fiber Polyester
						2121	1-3/C + gnd #1/0,600 V, EPR insulation
						UP210-28	
						UP210-30	1-2/C #12 + gnd, 600V, EPR insulation
3323C	E-287, E-287A	78	RGS-PVC coated conduit	959.40	1935.24		
						Pull rope	Soft-Fiber Polyester
						2121	1-3/C + gnd #1/0,600 V, EPR insulation
						UP210-28	1-2/C #12 + gnd, 600V, EPR insulation
						UP210-30	1-2/C #12 + gnd, 600V, EPR insulation
3324	E-286	53	RGS-PVC coated conduit	98.10	879.42	Pull rope	Soft-Fiber Polyester
						2121-1	1-2PR #18 Twisted shielded with overall shield
3324A	E-286, E-287	53	RGS-PVC coated conduit	131.79	879.42	Pull rope	Soft-Fiber Polyester
						2121-1	1-2PR #18 Twisted shielded with overall shield
3324B	E-264	78	Liquidtight flex metal conduit	0.00	6 1935.24	Pull rope	Soft-Fiber Polyester
3324C	E-287, E-287A	53	RGS-PVC coated conduit	98.10	879.42	Pull rope	Soft-Fiber Polyester
						2121-1	1-2PR #18 Twisted shielded with overall shield
3329	E-265	53	RGS-PVC coated conduit	0.00	879.42	Pull rope	Soft-Fiber Polyester
~~3330~~							
~~3330C~~							
~~3330D~~							
~~3330E~~							
~~3330F~~							
3333	E-264	78	RGS-PVC coated conduit	754.18	1935.24	Pull rope	Soft-Fiber Polyester
						2123	1-3/C + gnd #1/0, 600 V, EPR insulation
3337	E-264B	78	RGS-PVC coated conduit	618.45	1935.24	Pull rope	Soft-Fiber Polyester
						UP210-6 & 8	1-4/C + gnd #6, 600 V, EPR insulation
						UP210-13 & 17	1-4/C + gnd #8, 600 V, EPR insulation
3337A	E-266	53	RGS-PVC coated conduit	585.13	879.42	Pull rope	Soft-Fiber Polyester
						UP210-6 & 8	1-4/C + gnd #6, 600 V, EPR insulation
						UP210-13	1-3/C + gnd #8, 600V EPR insulation

For continuation, see next sheet.

CONDUIT AND TRAY SCHEDULE

E-427

STATE OF CALIFORNIA - DEPARTMENT OF TRANSPORTATION
Caltrans

DESIGN OVERSIGHT
BEHZAD GOLEMOHAMMADI

CALCULATED/DESIGNED BY PBP
CHECKED BY AB

REVISED BY	DATE REVISED

DATE 8/02

LAST REVISION 00-00-00

DATE PLOTTED => 11/8/2011
TIME PLOTTED => 8:34:26 AM

FOR REDUCED PLANS ORIGINAL SCALE IS IN MILLIMETERS 0 20 40 60 80

DGN FILE =>04-0120f1_0382R06.dgn
USERNAME =>KoonC

CU 04251

EA 0120F1

CONDUIT DATA

Conduit No	Reference	Size	Type	Total Fill (mm2)	Allowable Fill (mm2)	Included Cable No.	Conductor Type
3177A	E-264A	78	Liquidtight flex metal conduit	1889.83	1928.98	2119-B	3+1gnd, #250 kcmil, #1/0, 600V, EPR insulation
						2204-2	1-3/C #14, 600V, EPR Insulation
						A-3057-1	1-3/C + gnd #2, 600V, EPR Insulation
3177B	E-264A	78	Liquidtight flex metal conduit	6 1889.83	1935.24	2119-B	3+1gnd, #250 kcmil, #1/0, 600V, EPR insulation
						2204-2	1-3/C #14, 600V, EPR Insulation
						A-3057-1	1-3/C + gnd #2, 600V, EPR Insulation
3278A	E-264A	78	Liquidtight flex metal conduit	1827.85	1928.98	2123-2	1-3/C + gnd #2/0, 600V, EPR Insulation
						2123-3	1-3/C + gnd #2/0, 600V, EPR Insulation
						2910-11	1-3/C #16, 600V, EPR Insulation
3278B	E-264A	78	Liquidtight flex metal conduit	6 1827.85	1953.24	2123-2	1-3/C + gnd #2/0, 600V, EPR Insulation
						2123-3	1-3/C + gnd #2/0, 600V, EPR Insulation
						2910-11	1-3/C #16, 600V, EPR Insulation
3294A	E-264A	78	Liquidtight flex metal conduit	6	1928.98	Pull rope	Soft-fiber polyester
3294B	E-264A	78	Liquidtight flex metal conduit		1935.24	Pull rope	Soft-fiber polyester
3319A	E-264A	78	Liquidtight flex metal conduit	1675.89	1928.98	2121	1-3/C + gnd #1/0, 600V, EPR Insulation
						2120	1-3/C + gnd #1/0, 600V, EPR Insulation
						GND	1-#250 kcmil, bare copper
3319B	E-264A	78	Liquidtight flex metal conduit	6 1675.89	1935.24	2121	1-3/C + gnd #1/0, 600V, EPR Insulation
						2120	1-3/C + gnd #1/0, 600V, EPR Insulation
						GND	1-#250 kcmil, bare copper
3322A	E-264A	78	Liquidtight flex metal conduit	1889.83	1928.98	2119-A	3+1gnd, #250 kcmil, #1/0, 600V, EPR insulation
						2123	1-3/C + gnd #2, 600V, EPR Insulation
						2204-1	1-3/C #14, 600V, EPR Insulation
3322B	E-264A	78	Liquidtight flex metal conduit	6 1889.83	1935.24	2119-A	3+1gnd, #250 kcmil, #1/0, 600V, EPR insulation
						2123	1-3/C + gnd #2, 600V, EPR Insulation
						2204-1	1-3/C #14, 600V, EPR Insulation
3330A	E-264A	78	Liquidtight flex metal conduit	0.00	1928.98	Pull rope	Soft-fiber polyester
3330B	E-264A	78	Liquidtight flex metal conduit	6 0.00	1935.24	Pull rope	Soft-fiber polyester
3339A	E-264A	78	Liquidtight flex metal conduit	1445.00	1928.98	2125	3+1gnd, #250 kcmil, #1/0, 600V, EPR insulation
						GND	1-#250 kcmil, bare copper
3339B	E-264A	78	Liquidtight flex metal conduit	6 1445.00	1935.24	2125	3+1gnd, #250 kcmil, #1/0, 600V, EPR insulation
						GND	1-#250 kcmil, bare copper
3348A	E-264A	78	Liquidtight flex metal conduit		1928.98	Pull rope	Soft-fiber polyester
3348B	E-264A	78	Liquidtight flex metal conduit	6	1935.24	Pull rope	Soft-fiber polyester
3349A	E-264A	78	Liquidtight flex metal conduit	196.20	1928.98	Pull rope	Soft-fiber polyester
						2120-1	1-2 pair #18 twisted shielded w/overall shield
						2121-1	1-2 pair #18 twisted shielded w/overall shield
3349B	E-264A	78	Liquidtight flex metal conduit	6 196.20	1928.98	Pull rope	Soft-fiber polyester
						2120-1	1-2 pair #18 twisted shielded w/overall shield
						2121-1	1-2 pair #18 twisted shielded w/overall shield

REQUEST FOR INFORMATION NOT ADDRESSED IN THIS CCO REMAIN IN FORCE

MARK	DATE	DESCRIPTIONS	BY	CH'D	CCO#
6	11/07/11	PLATFORM MODIFICATIONS	RM	DO	206
5	07/01/11	TOS MODIFICATIONS	RR	RG	81
4	01/07/11	ELECTRICAL WARNING SYSTEMS	TW	RG	61
3	03/26/10	DEHUMIDIFIER SCADA INTERFACE	RR	RG FW	130
2	02/25/08	CABLE TRAY CHANGES	RG	SE	42S1
1	02/19/08	ELECTRICAL MODIFICATIONS	MP EL	RR	42

REVISIONS

CONTRACT CHANGE ORDER NO. 206
SHEET 9 OF 9

Caltrans Metric

DIST	COUNTY	ROUTE	KILOMETER POST TOTAL PROJECT	SHEET No	TOTAL SHEETS
04	SF	80	13.2/13.9	407 R6	1204

12/19/02
REGISTERED ELECTRICAL ENGINEER DATE

12-6-04
PLANS APPROVAL DATE

REGISTERED PROFESSIONAL ENGINEER JENS ERLINGSSON No. 8249 Exp. 9/30/06 ELECTRICAL STATE OF CALIFORNIA

PB POWER, Inc.
A Parsons Brinckerhoff Company
303 Second St., Suite 700N
San Francisco, CA 94107-1317

The State of California or its officers or agents shall not be responsible for the accuracy or completeness of electronic copies of this plan sheet.

Caltrans now has a web site! To get to the web site, go to http://www.dot.ca.gov

REGISTERED PROFESSIONAL ENGINEER DAVID H. OTO No. 10699 Exp. 06/30/2013 ELECTRICAL STATE OF CALIFORNIA
FOR REVISION ONLY 6

REGISTERED PROFESSIONAL ENGINEER SYN YEE CHIN No. 18186 Exp. 09/30/2011 ELECTRICAL STATE OF CALIFORNIA
FOR REVISION ONLY 3 4 5

REGISTERED PROFESSIONAL ENGINEER S. A. ESTOQUE, JR. No. E-10151 Exp. 12/31/2008 ELECTRICAL STATE OF CALIFORNIA
FOR REVISION ONLY 1 2

CONDUIT DATA

Conduit No	Reference	Size	Type	Total Fill (mm2)	Allowable Fill (mm2)	Included Cable No.	Conductor Type
3359A	E-264A	78	Liquidtight flex metal conduit	457.88	1928.98	CCTVE01A	HCC
						MVDSE02A	MVDS DLC
						MVDSE03A	MVDS DLC
						CCTVE01B	HCC
3359B	E-264A	78	Liquidtight flex metal conduit	6 457.88	1935.24	CCTVE01A	HCC
						MVDSE02A	MVDS DLC
						MVDSE03A	MVDS DLC
						CCTVE01B	HCC
8011A	E-264A	78	Liquidtight flex metal conduit	697.03	1935.24	Pull rope	Soft-fiber polyester
						1201-1	1-2/C + gnd #10, 600V, EPR Insulation
						1201-2	1-2/C + gnd #10, 600V, EPR Insulation
						1201-6	1-2/C + gnd #10, 600V, EPR Insulation
						1201-4A	1-2/C #14, 600V, EPR Insulation
						1201-4B	1-2/C #14, 600V, EPR Insulation
						1201-4C	1-2/C #14, 600V, EPR Insulation
						2204-2	1-3/C + gnd #14, 600V, EPR Insulation
8011B	E-264A	78	Liquidtight flex metal conduit	6 697.03	1935.24	Pull rope	Soft-fiber polyester
						1201-1	1-2/C + gnd #10, 600V, EPR Insulation
						1201-2	1-2/C + gnd #10, 600V, EPR Insulation
						1201-6	1-2/C + gnd #10, 600V, EPR Insulation
						1201-4A	1-2/C #14, 600V, EPR Insulation
						1201-4B	1-2/C #14, 600V, EPR Insulation
						1201-4C	1-2/C #14, 600V, EPR Insulation
						2204-2	1-3/C + gnd #14, 600V, EPR Insulation
9057A	E-264A	78	Liquidtight flex metal conduit	442.35	1928.98	2910-12	4 pair #22, shielded pairs, 300V, PE insulation
						2910-8	4 pair #22, shielded pairs, 300V, PE insulation
						2910-7	4 pair #24, overall shielded, 300V, PE insulation
						2119-2	4 pair #22, shielded pairs, 300V, PE insulation
9057B	E-264A	78	Liquidtight flex metal conduit	6 442.35	1935.24	2910-12	4 pair #22, shielded pairs, 300V, PE insulation
						2910-8	4 pair #22, shielded pairs, 300V, PE insulation
						2910-7	4 pair #24, overall shielded, 300V, PE insulation
						2119-2	4 pair #22, shielded pairs, 300V, PE insulation
9057C	E-264A, E-366	21	RGS - PVC coated conduit	62.07	187.69	2910-11	1-3/C #16, 600V, EPR Insulation

CONDUIT AND TRAY SCHEDULE

E-449C

REVISED BY	DATE	DATE REVISED

CALCULATED/DESIGNED BY EJL 3/04
CHECKED BY JE 3/04

DESIGN OVERSIGHT
BEHZAD GOLEMOHAMMADI

STATE OF CALIFORNIA - DEPARTMENT OF TRANSPORTATION
Caltrans

LAST REVISION 00-00-00

DATE PLOTTED => 11/8/2011
TIME PLOTTED => 1:06:19 PM

FOR REDUCED PLANS ORIGINAL SCALE IS IN MILLIMETERS 0 20 40 60 80

DGN FILE =>04-0120f1_0407R06.dgn
USERNAME =>KoonC

CU 04251

EA 0120F1