DIST	COUNTY	ROUTE	KILOMETER POST TOTAL PROJECT	SHEET No	TOTAL SHEETS
04	SF	80	13.2/13.9	21S2	1204

REGISTERED ELECTRICAL ENGINEER 07/05/11 DATE

PLANS APPROVAL DATE

REGISTERED PROFESSIONAL ENGINEER Mark Grodzki No. 65594 Exp. 09/30/11 CIVIL STATE OF CALIFORNIA

PB AMERICAS, Inc.
A Parsons Brinckerhoff Company
303 Second St., Suite 700N
San Francisco, CA 94107-1317

The State of California or its officers or agents shall not be responsible for the accuracy or completeness of electronic copies of this plan sheet.

Caltrans now has a web site! To get to the web site, go to http://www.dot.ca.gov

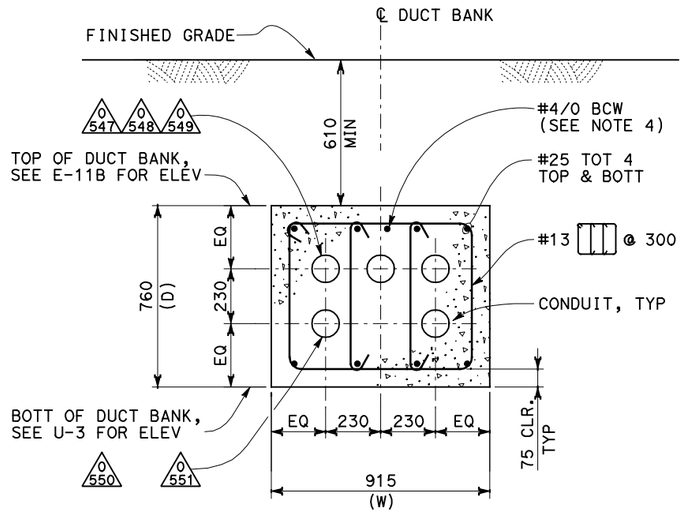

SECTION A-A

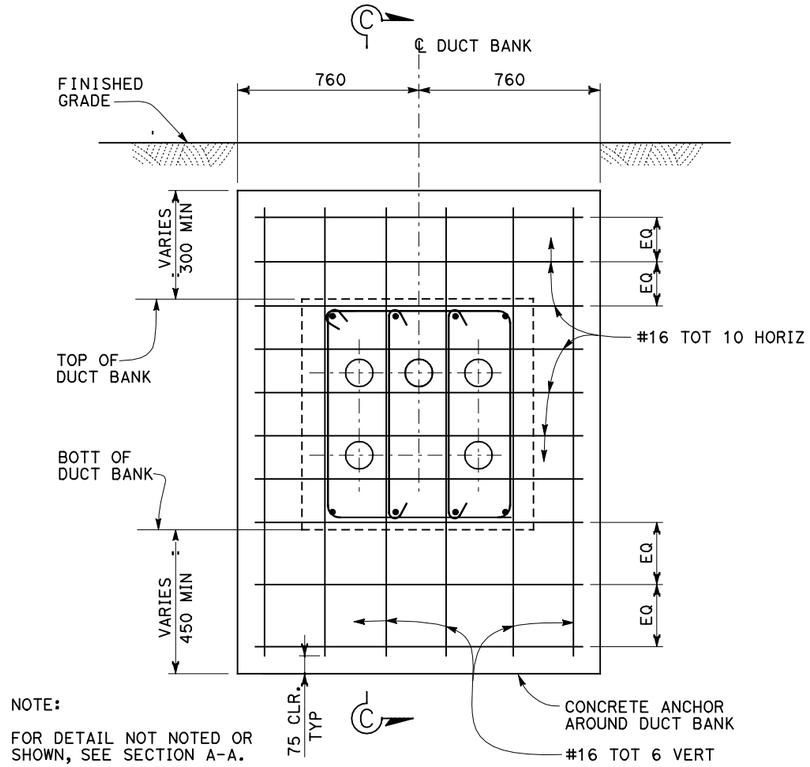

NOTE:

FOR DETAIL NOT NOTED OR SHOWN, SEE SECTION A-A.

SECTION B-B

NOTES:

1. SPACING OF CONCRETE ANCHORS FOR DUCT BANK SLOPES BETWEEN VALUES SHOWN IN TABLE A MAY BE INTERPOLATED.
2. CONCRETE ANCHORS ARE NOT REQUIRED AT DUCT BANK WHEN DUCT BANK SLOPE IS LESS THAN 1:3.
3. THE MAXIMUM LOADING ON DUCT BANK IS 280 kPa.
4. CONNECT GROUND CONDUCTOR TO GROUND BAR INSIDE MANHOLE.

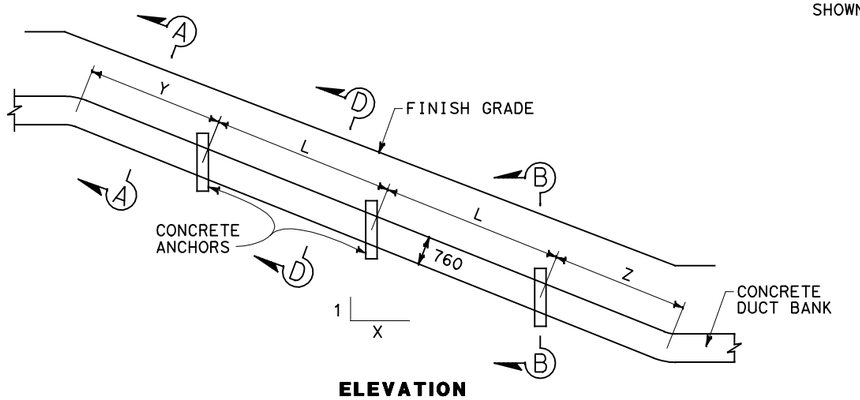

ELEVATION

CONCRETE DUCT BANK ANCHORS
(915 mm (W) X 760 mm (D))

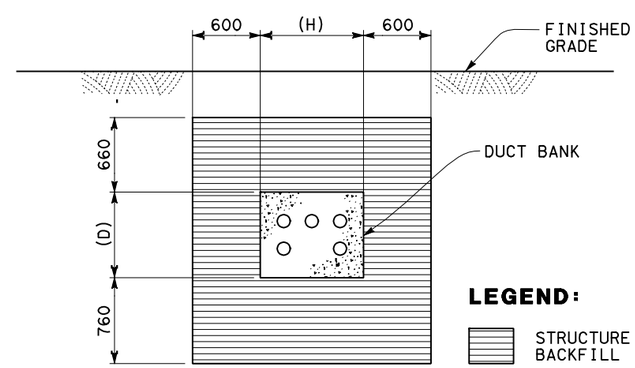

LIMITS OF STRUCTURE BACKFILL AT DUCT BANK ON SLOPE
(LIMITS AS SHOWN NORMAL TO DUCT BANK)

SECTION D-D

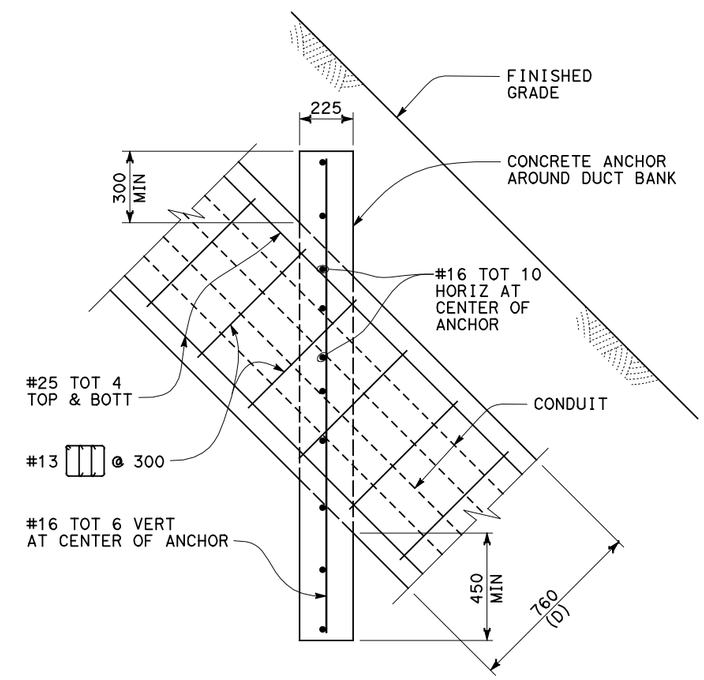

SECTION C-C

TABLE A
(For 915 X 760 DUCT BANK)

DUCT BANK SLOPE(1:X)	L (Max) (mm)	Z (Max) (mm)	Y (Max) (mm)	LENGTH OF EXCAVATION IN STAGES (Max) (mm)
1:1	4270	1200	2135	4270
1:1.5	5485	1525	2590	5485
1:2	6705	1830	3050	6705
1:2.5	7620	2135	3810	7620
1:3	9145	2440	4570	9145

REQUEST FOR INFORMATION NOT ADDRESSED IN THIS CCO REMAIN IN FORCE

MARK	DATE	DESCRIPTIONS	BY	CH'D	CCO#
0	07/05/11	W2 DUCT BANKS REINFORCEMENT	MG	LJ	81

REVISIONS

CONTRACT CHANGE ORDER NO._____
SHEET_____ OF _____

DETAILS
UTILITY PLAN
DUCT BANK STRUCTURAL DETAILS

NO SCALE

ALL DIMENSIONS ARE IN MILLIMETERS UNLESS OTHERWISE SHOWN

U-4

DATE XX/11	REVISED BY	DATE REVISED
XX	XX	XX

CALCULATED/DESIGNED BY
CHECKED BY

DESIGN OVERSIGHT
BEHZAD GOLEMOHAMMADI

STATE OF CALIFORNIA - DEPARTMENT OF TRANSPORTATION
Caltrans

LAST REVISION 00-00-00
DATE PLOTTED => 05-JUL-2011
TIME PLOTTED => 14:34

FOR REDUCED PLANS ORIGINAL SCALE IS IN MILLIMETERS 0 20 40 60 80

DGN FILE =>04-0120f1_0021S02.dgn
USERNAME =>llorico

CU 04251 EA 0120F1