DIST	COUNTY	ROUTE	KILOMETER POST TOTAL PROJECT	SHEET No	TOTAL SHEETS
04	SF	80	13.2/13.9	105 R3	1204

REGISTERED ELECTRICAL ENGINEER 12/19/02 DATE

12-6-04
PLANS APPROVAL DATE

REGISTERED PROFESSIONAL ENGINEER JENS ERLINGSSON No. 8249 Exp. 9/30/06 ELECTRICAL STATE OF CALIFORNIA

PB AMERICAS, Inc.
A Parsons Brinckerhoff Company
303 Second St., Suite 700N
San Francisco, CA 94107-1317

The State of California or its officers or agents shall not be responsible for the accuracy or completeness of electronic copies of this plan sheet.

Caltrans now has a web site! To get to the web site, go to http://www.dot.ca.gov

Caltrans Metric

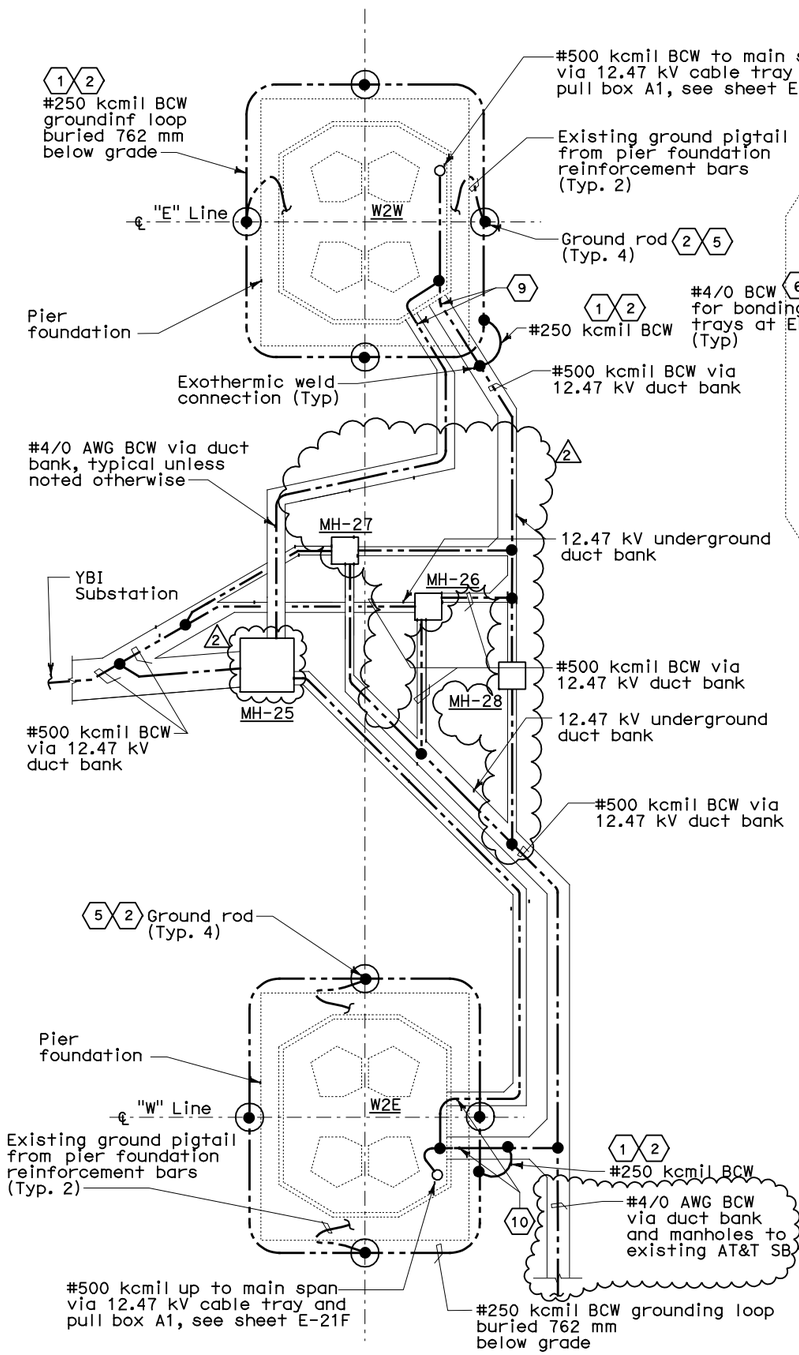

PIER W2 FOUNDATION PLAN 11

DETAIL 1

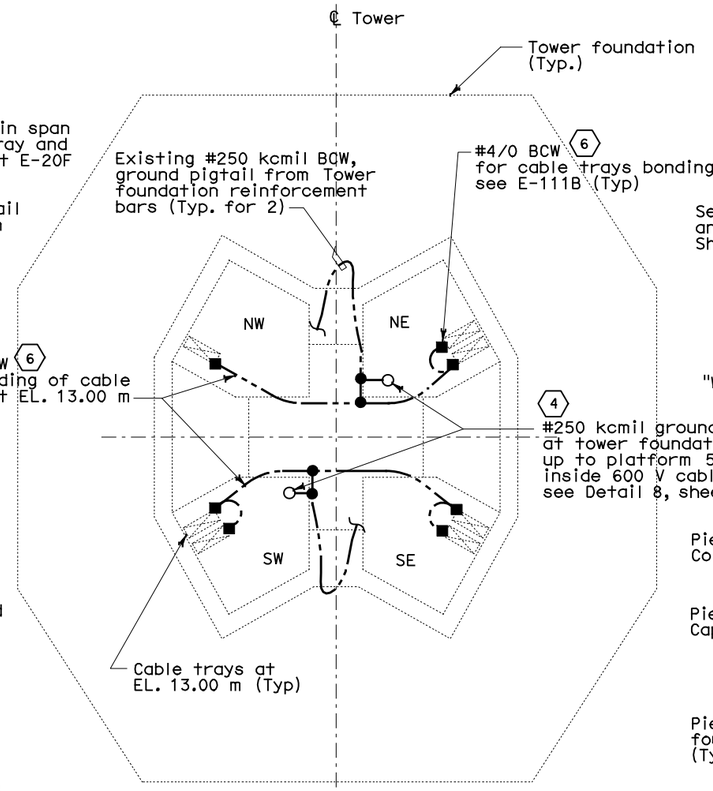

TOWER FOUNDATION PLAN

DETAIL 2

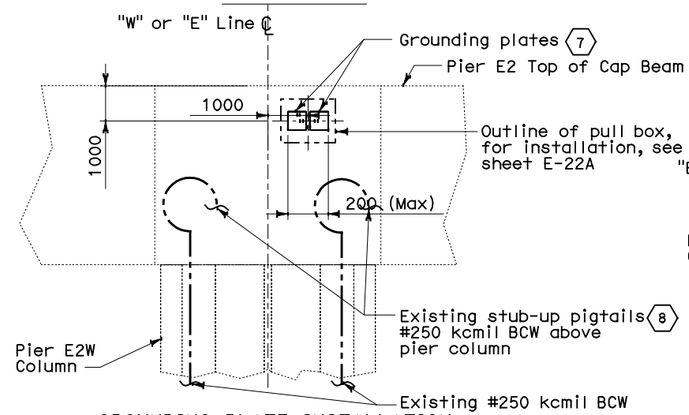

GROUNDING PLATE INSTALLATION

SECTION A-A

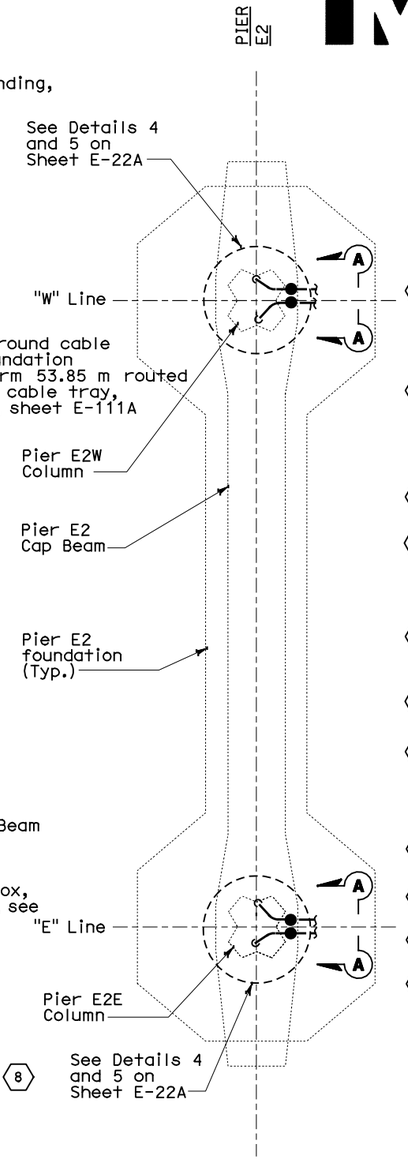

PIER E2 FOUNDATION PLAN

DETAIL 3

SHEET NOTES:

1. Tie the underground duct bank #500 kcmil Bare Copper Wire (BCW) system grounding conductor to the W2E and W2W pier foundations. See W2 contract 04-0120C4 for limited scope of work.
2. Route the #250 kcmil grounding conductors around the W2W and connect to the new grounding rods. This grounding loop shall be exothermically connected to the #500 kcmil main ground conductor at the pier. This is typical for pier W2E.
3. Not used.
4. Main tower foundation ground conductors shall be routed vertically up to platform 53.85 m via 600V cable trays inside SW and NE tower quadrants and tied exothermically to the #500 kcmil main ground conductor.
5. Ground rod shall be copper clad, 19 mm diameter and 3048 mm long.
6. Bond all the cable trays to the ground loop at Tower elevation 13 m.
7. Install two grounding plates, Thermoweld Type CR-27 Cat. #38-4533-6B or equal (sized for #250 kcmil BCW with 305mm pigtail). Grounding plates shall be embedded at east face side of the pier E2 cap beam.
8. For connection of stub-up #250 kcmil BCW to grounding plates, see sheet E-22A.
9. See Detail 1, sheet E-22B for grounding installation through pier pit wall.
10. See Detail 2, sheet E-22B for grounding installation through pier pit wall.
11. Pier grounding system must be verified and tested for ground resistance prior to tie-in to #500 kcmil main ground conductor. Perform tests, by the fall-of-potential method according to IEEE-81. Contractor shall submit a test plan and procedure for Engineer's approval. Test results shall be submitted to the Engineer for evaluation and approval.

ORIGINAL SHEET SUPERCEDED

REQUEST FOR INFORMATION NOT ADDRESSED IN THIS CCO REMAIN IN FORCE

MARK	DATE	DESCRIPTIONS	BY	CH'D	CCO#
3	12/12/11	W2 DUCT BANKS REINFORCEMENT	TW	RG	205
2	08/08/11	W2 DUCT BANKS REINFORCEMENT	TW	RG	205
1	11/20/09	ELECTRICAL GROUNDING	RR AWG	RG FE	75

REVISIONS

CONTRACT CHANGE ORDER NO._____
SHEET _____ OF _____

REGISTERED PROFESSIONAL ENGINEER FADI WALIEDDINE No. 11465 Exp. 12/31/2009 ELECTRICAL STATE OF CALIFORNIA

FOR REVISION ONLY 1

REGISTERED PROFESSIONAL ENGINEER DAVID H. OTO No. 10699 Exp. 06/30/2013 ELECTRICAL STATE OF CALIFORNIA

FOR REVISION ONLY 2 3

DETAILS
UNDERGROUND FOUNDATION GROUNDING
NO SCALE

E-22

THIS PLAN ACCURATE FOR ELECTRICAL WORK ONLY.

ALL DIMENSIONS ARE IN MILLIMETERS UNLESS OTHERWISE SHOWN

FOR REDUCED PLANS ORIGINAL SCALE IS IN MILLIMETERS 0 20 40 60 80

DGN FILE =>04-0120f1_0105R03.dgn
USERNAME =>llorico

CU 04251 | EA 0120F1

LAST REVISION 00-00-00 | DATE PLOTTED => 12-DEC-2011 TIME PLOTTED => 17:35

STATE OF CALIFORNIA - DEPARTMENT OF TRANSPORTATION
Caltrans

DESIGN OVERSIGHT: BEHZAD GOLEMOHAMMADI

CALCULATED/ DESIGNED BY	KG	DATE 11/01	REVISED BY
CHECKED BY	PF	12/01	DATE REVISED