DIST	COUNTY	ROUTE	KILOMETER POST TOTAL PROJECT	SHEET No	TOTAL SHEETS
04	SF	80	13.2/13.9	98S1	1204

Caltrans Metric

REGISTERED ELECTRICAL ENGINEER 07/05/11 DATE

PLANS APPROVAL DATE

REGISTERED PROFESSIONAL ENGINEER DAVID H. OTO No. 10699 Exp. 06/30/2013 ELECTRICAL STATE OF CALIFORNIA

PB AMERICAS, Inc.
A Parsons Brinckerhoff Company
303 Second St., Suite 700N
San Francisco, CA 94107-1317

The State of California or its officers or agents shall not be responsible for the accuracy or completeness of electronic copies of this plan sheet.

Caltrans now has a web site! To get to the web site, go to http://www.dot.ca.gov

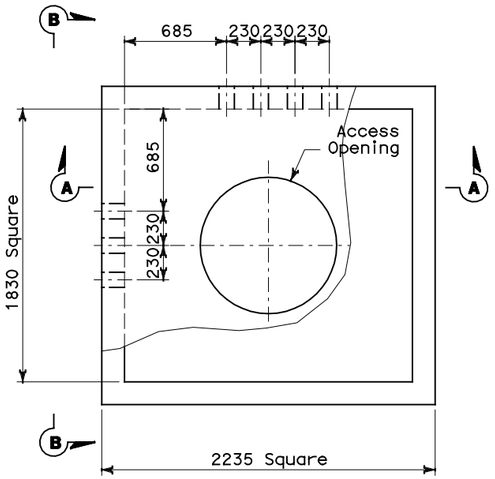

PLAN-MANHOLE-28A
SCALE: 1:20 (Non-Caltrans Utilities)

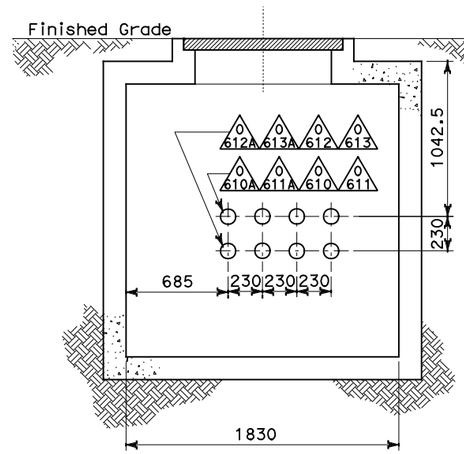

SECTION A-A
SCALE: 1:20

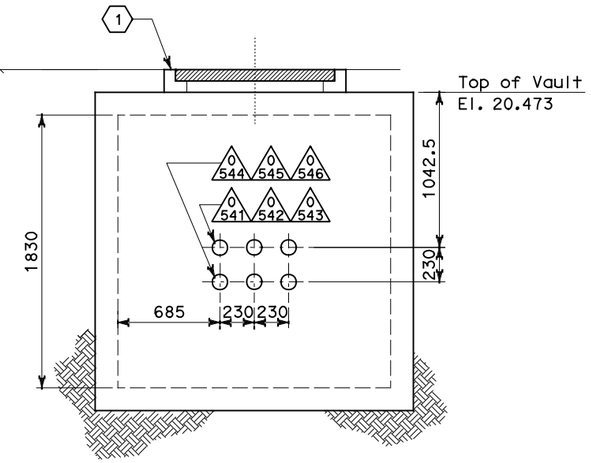

SECTION B-B
SCALE: 1:20

NOTES:

1. References:
   - For duct banks and manhole plan, see sheet E-11 and E-11A.
   - For typical manhole details, see sheet E-17.
   - For duct bank sections, see sheets U-4 E-19A, E-19B & E-23.
   - For circuit and conduit/cable tray schedules, see sheets starting at E-401
2. For other related work, not shown on this sheet, see Electrical Special Provisions.

SHEET NOTES:

1. Approximate distance of manhole necking or riser is from the finished grade and top of manhole. Maximum length of manhole necking or riser shall be 914 mm.

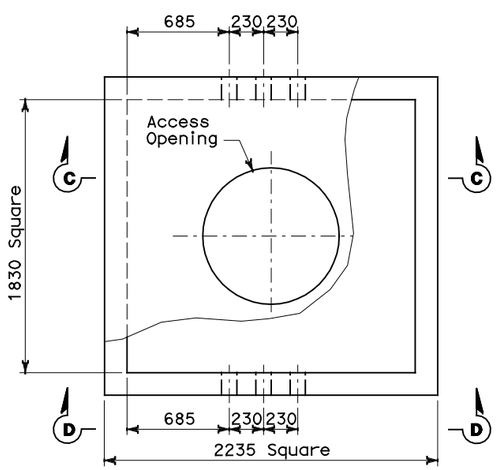

PLAN-MANHOLE-28B
SCALE: 1:20 (Non-Caltrans Utilities)

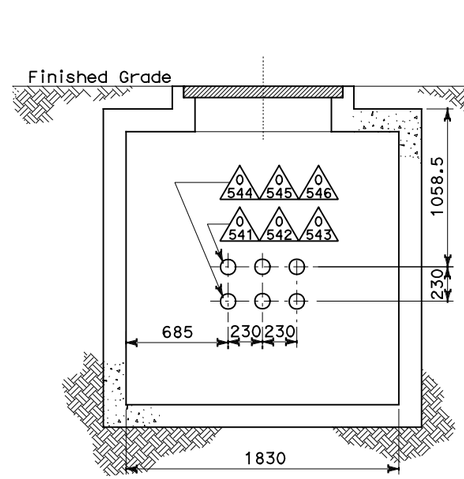

SECTION C-C
SCALE: 1:20

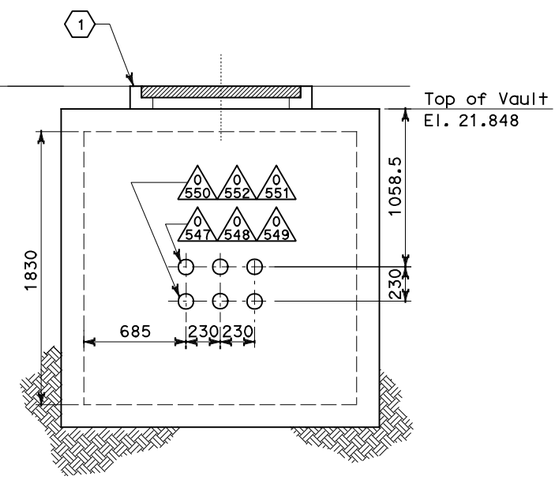

SECTION D-D
SCALE: 1:20

REQUEST FOR INFORMATION NOT ADDRESSED IN THIS CCO REMAIN IN FORCE					
0	08/08/11	W2 DUCT BANKS REINFORCEMENT	EJL TW	RG	205
MARK	DATE	DESCRIPTIONS	BY	CH'D	CCO#
REVISIONS					

CONTRACT CHANGE ORDER NO._____
SHEET _____ OF _____

DETAILS
UNDERGROUND
MANHOLE PLAN AND SECTIONS
SCALE AS NOTED

E-15A

THIS PLAN ACCURATE FOR ELECTRICAL WORK ONLY.

ALL DIMENSIONS ARE IN MILLIMETERS UNLESS OTHERWISE SHOWN

STATE OF CALIFORNIA - DEPARTMENT OF TRANSPORTATION
Caltrans

DESIGN OVERSIGHT: BEHZAD GOLEMOHAMMADI

CALCULATED/ DESIGNED BY	CHECKED BY	DATE XX/II	REVISED BY	DATE REVISED
XX	XX	XX/II		

FOR REDUCED PLANS ORIGINAL SCALE IS IN MILLIMETERS 0 20 40 60 80

DGN FILE =>04-0120f1_0098S01.dgn
USERNAME =>llorico

CU 04251 EA 0120F1

LAST REVISION 00-00-00
DATE PLOTTED => 10-AUG-2011
TIME PLOTTED => 08:22